REPAIR PRO

Fix it like a Pro

How to use this Service Manual

In the bookmarks to the left you will find different segments of this manual:

Service Manual

This is the standard manual for this vehicle. Use this segment as your major point of reference and information.

Supplementary Service Manual (if available)

These segments are updates and additions to the standard service manual. They are added as needed when certain changes are made to the model. Be sure to check these for additional information that may be lacking from the regular service manual.

EB002000

HOW TO USE THIS MANUAL

MANUAL ORGANIZATION

This manual consists of chapters for the main categories of subjects. (See “Illustrated symbols”)

1st title ①: This is the title of the chapter with its symbol in the upper right corner of each page.

2nd title ②: This title indicates the section of the chapter and only appears on the first page of each section. It is located in the upper right corner of the page.

3rd title ③: This title indicates a sub-section that is followed by step-by-step procedures accompanied by corresponding illustrations.

EXPLODED DIAGRAMS

To help identify parts and clarify procedure steps, there are exploded diagrams at the start of each removal and disassembly section.

1. An easy-to-see exploded diagram ④ is provided for removal and disassembly jobs.
2. Numbers ⑤ are given in the order of the jobs in the exploded diagram. A number that is enclosed by a circle indicates a disassembly step.
3. An explanation of jobs and notes is presented in an easy-to-read way by the use of symbol marks ⑥. The meanings of the symbol marks are given on the next page.
4. A job instruction chart ⑦ accompanies the exploded diagram, providing the order of jobs, names of parts, notes in jobs, etc.
5. For jobs requiring more information, the step-by-step format supplements ⑧ are given in addition to the exploded diagram and the job instruction chart.

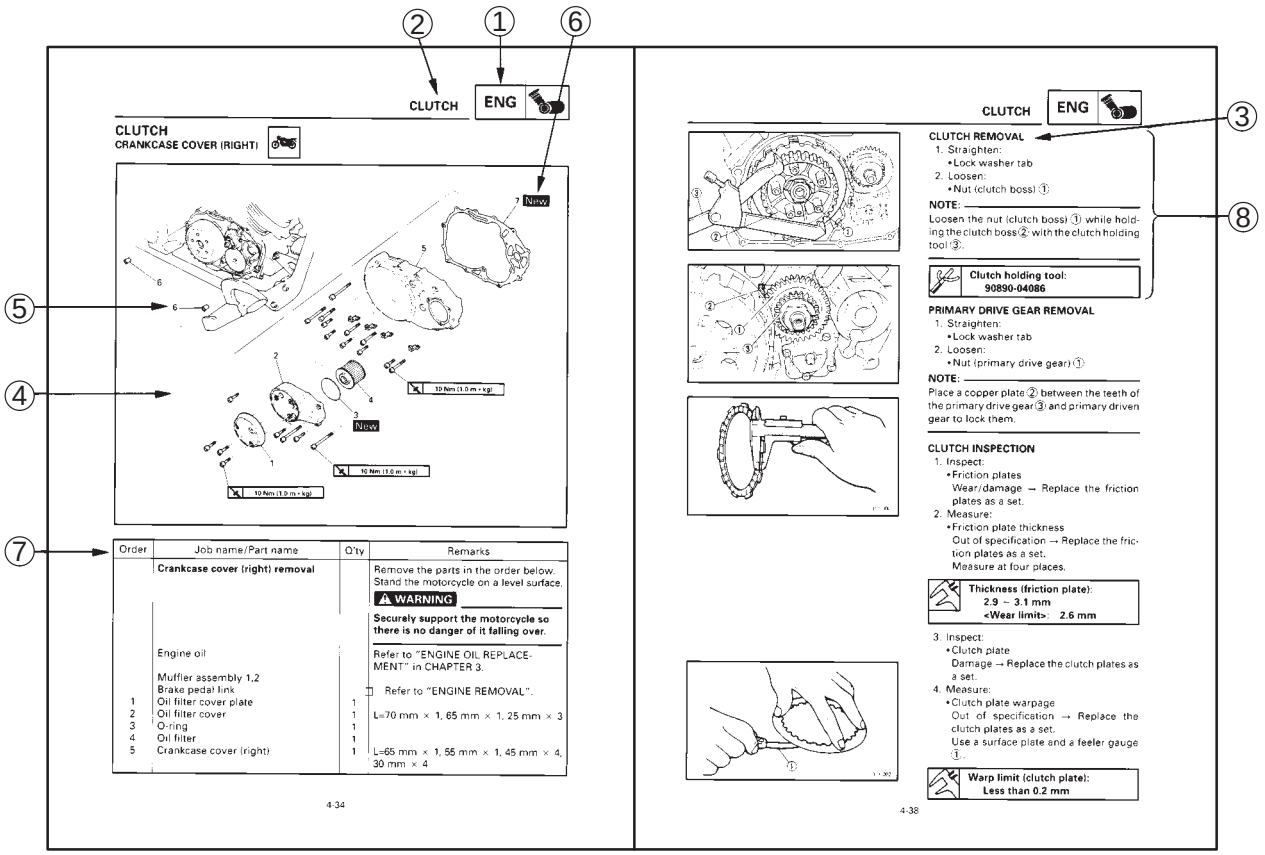

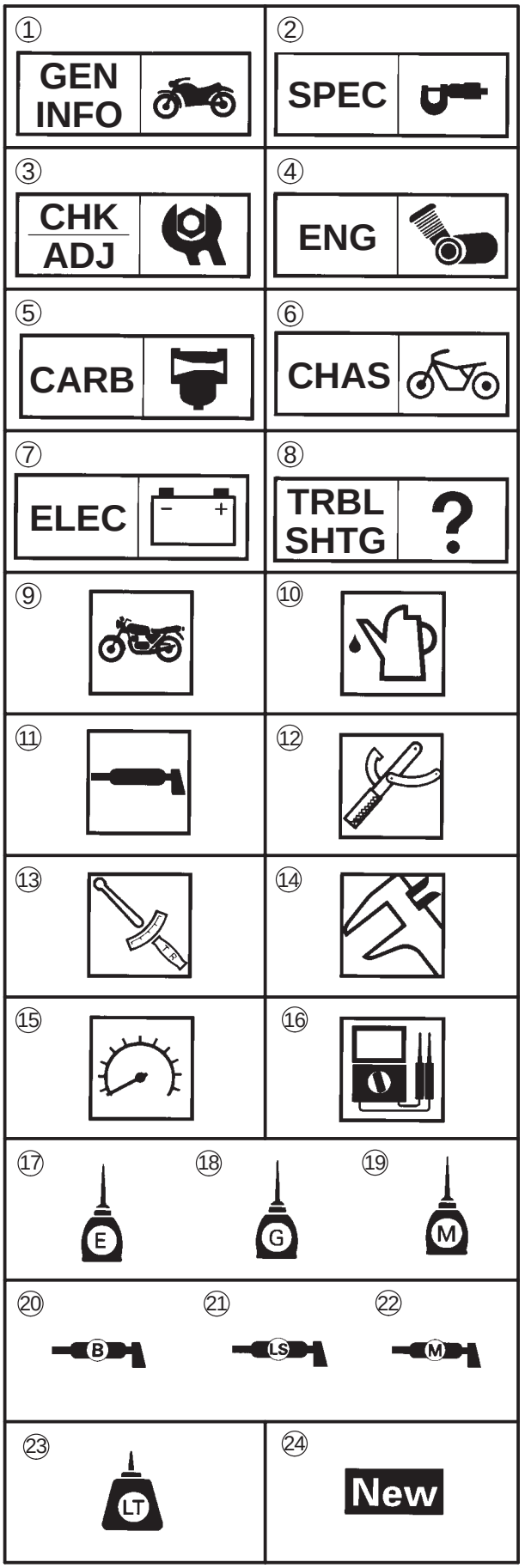

EB003000

ILLUSTRATED SYMBOLS

The following symbols are not relevant to every vehicle.

Symbols ① to ⑧ indicate the subject of each chapter.

① General information
② Specifications
③ Periodic checks and adjustments
④ Engine
⑤ Caburetor
⑥ Chassis
⑦ Electrical system
⑧ Troubleshooting

Symbols ⑨ to ⑯ indicate the following.

⑨ Serviceable with engine mounted
⑩ Filling fluid
⑪ Lubricant
⑫ Special tool
⑬ Tightening torque
⑭ Wear limit, clearance
⑮ Engine speed
⑯ Electrical data

Symbols ⑰ to ㉒ in the exploded diagrams indicate the types of lubricants and lubrication points.

⑰ Engine oil
⑱ Gear oil
⑲ Molybdenum disulfide oil
⑳ Wheel bearing grease
㉑ Lithium soap base grease
㉒ Molybdenum disulfide grease

Symbols ㉓ to ㉔ in the exploded diagrams indicate the following:

㉓ Apply locking agent (LOCTITE®)
㉔ Replace the part

E004000

TABLE OF CONTENTS

GENERAL INFORMATION	GEN INFO 1
SPECIFICATIONS	SPEC 2
PERIODIC CHECKS AND ADJUSTMENTS	CHK ADJ 3
ENGINE	ENG 4
CARBURETION	CARB 5
CHASSIS	CHAS 6
ELECTRICAL SYSTEM	ELEC 7
TROUBLESHOOTING	TRBL SHTG 8

CHAPTER 1.
GENERAL INFORMATION

MOTORCYCLE IDENTIFICATION 1-1
VEHICLE IDENTIFICATION NUMBER 1-1
MODEL LABEL 1-1

IMPORTANT INFORMATION 1-2
PREPARATION FOR REMOVAL PROCEDURES 1-2
REPLACEMENT PARTS 1-2
GASKETS, OIL SEALS AND O-RINGS 1-2
LOCK WASHERS/PLATES AND COTTER PINS 1-3
BEARINGS AND OIL SEALS 1-3
CIRCLIPS 1-3

CHECKING OF CONNECTIONS 1-4

SPECIAL TOOLS 1-5

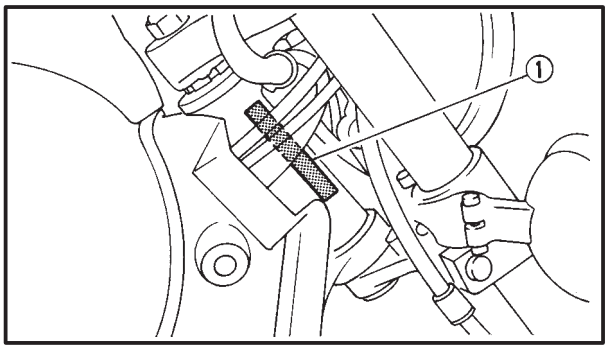

EB100000

GENERAL INFORMATION

MOTORCYCLE IDENTIFICATION

EB100010

VEHICLE IDENTIFICATION NUMBER

The vehicle identification number ① is stamped into the right side of the steering head.

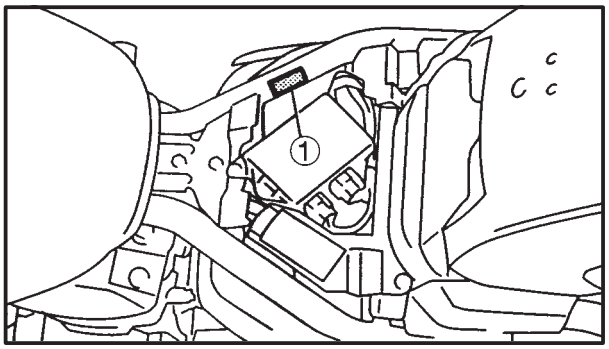

MODEL LABEL

The model label ① is affixed to the frame. This information will be needed to order spare parts.

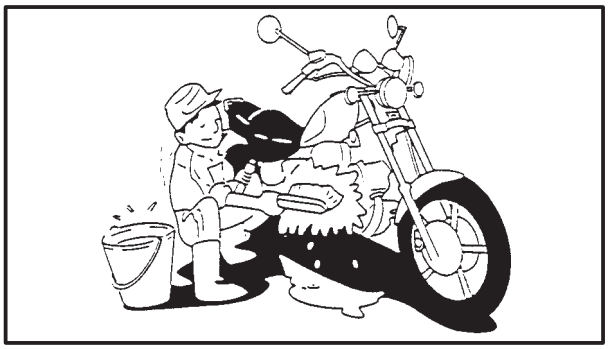

EB101000

IMPORTANT INFORMATION

PREPARATION FOR REMOVAL PROCEDURES

1. Remove all dirt, mud, dust and foreign material before removal and disassembly.

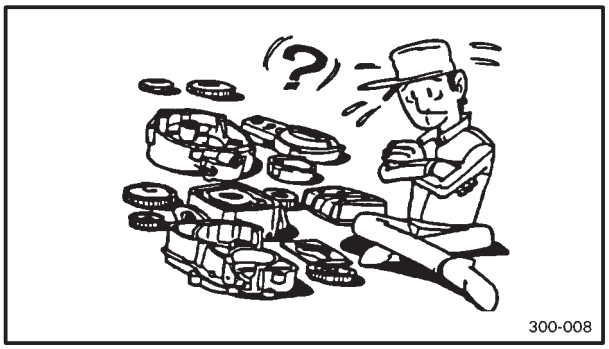

2. Use proper tools and cleaning equipment. Refer to the “SPECIAL TOOLS” section.
3. When disassembling the machine, always keep mated parts together. This includes gears, cylinders, pistons and other parts that have been “mated” through normal wear. Mated parts must always be reused or replaced as an assembly.
4. During machine disassembly, clean all parts and place them in trays in the order of disassembly. This will speed up assembly and allow for the correct installation of all parts.
5. Keep all parts away from any source of fire.

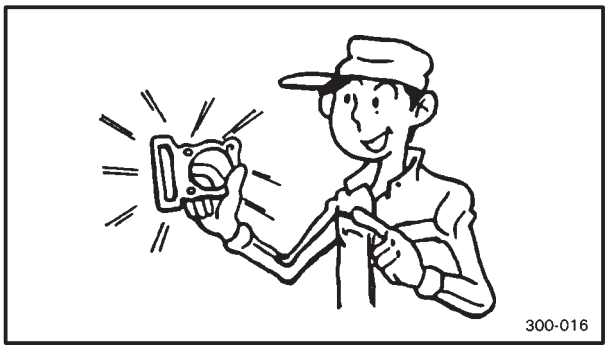

EB101010

REPLACEMENT PARTS

1. Use only genuine Yamaha parts for all replacements. Use oil and grease recommended by Yamaha for all lubrication jobs. Other brands may be similar in function and appearance, but inferior in quality.

EB101020

GASKETS, OIL SEALS AND O-RINGS

1. Replace all gaskets, seals and O-rings when overhauling the engine. All gasket surfaces, oil seal lips and O-rings must be cleaned.
2. Properly oil all mating parts and bearings during reassembly. Apply grease to the oil seal lips.

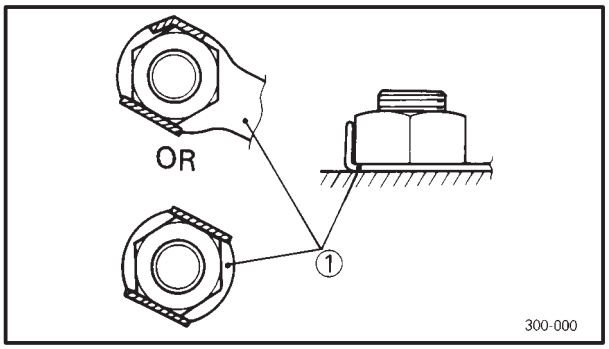

EB101030

LOCK WASHERS/PLATES AND COTTER PINS

1. Replace all lock washers/plates① and cotter pins after removal. Bend lock tabs along the bolt or nut flats after the bolt or nut has been tightened to specification.

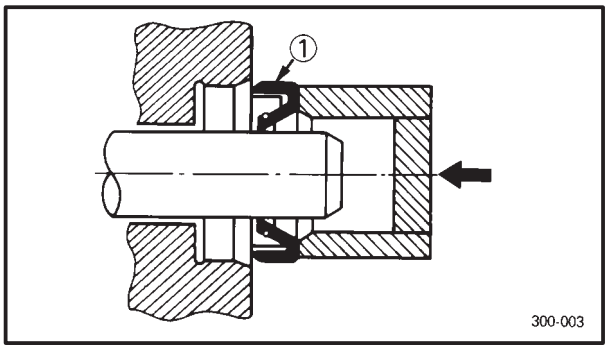

EB101040

BEARINGS AND OIL SEALS

1. Install bearings and oil seals so that the manufacturer's marks or numbers are visible. When installing oil seals, apply a light coating of lightweight lithium base grease to the seal lips. Oil bearings liberally when installing, if appropriate.

① Oil seal

CAUTION:

Do not use compressed air to spin the bearings dry. This will damage the bearing surfaces.

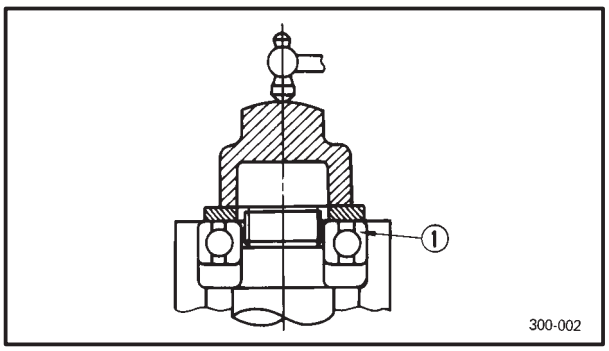

① Bearing

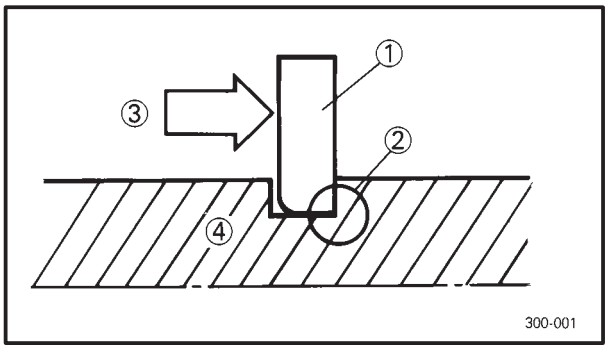

EB101050

CIRCLIPS

1. Check all circlips carefully before reassembly. Always replace piston pin clips after one use. Replace distorted circlips. When installing a circlip ①, make sure that the sharp-edged corner ② is positioned opposite the thrust ③ it receives. See sectional view.

④ Shaft

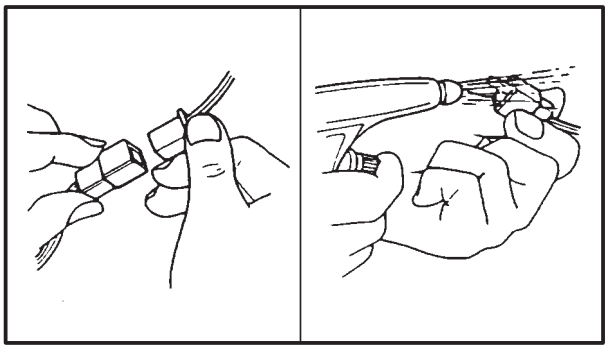

EB801000

CHECKING OF CONNECTIONS

Check the connectors for stains, rust, moisture, etc.

1. Disconnect:
   - Connector
2. Check:
   - Connector
     Moisture → Dry each terminal with an air blower.
     Stains/rust → Connect and disconnect the terminals several times.
3. Check:
   - Connector leads
     Looseness → Bend up the pin ① and connect the terminals.

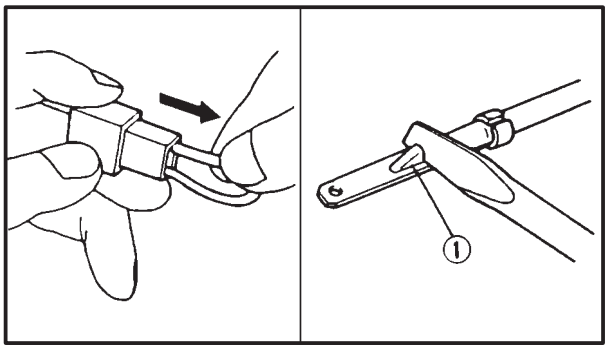

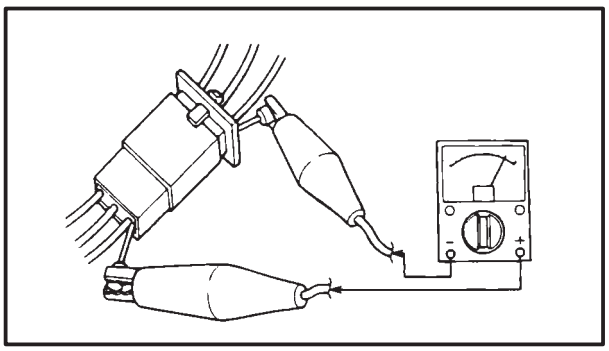

4. Connect:
   - Connector terminals

NOTE:

The two terminals “click” together.

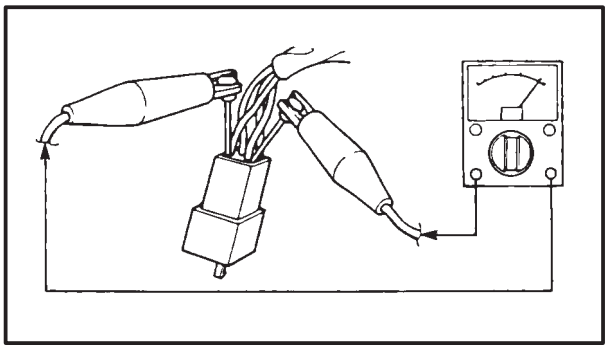

5. Check:
   - Continuity (using a pocket tester)

NOTE:

- If there is no continuity, clean the terminals.
- When checking the wire harness be sure to perform steps 1 to 3.
- As a quick remedy, use a contact revitalizer available at most part stores.
- Check the connector with a pocket tester as shown.

EB102001

SPECIAL TOOLS

The following special tools are necessary for complete and accurate tune-up and assembly. Use only the appropriate special tools; this will help prevent damage caused by the use of inappropriate tools or improvised techniques. Special tools may differ by shape and part number from country to country. In such a case, two types are provided.
When placing an order, refer to the list provided below to avoid any mistakes.
P/N. YM-, YU-
for US, CAN
YS-, YK-, ACC-
P/N 90890-
Except for US, CAN

Tool No.	Tool name/How to use	Illustration
Weight YU-1083-3 90890-01084 Bolt YU-1083-2 90890-01085	Slide hammer bolt/weight These tools are used to remove the rocker arm shaft.	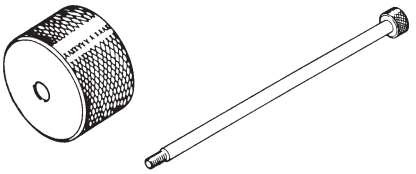
YU-01135-A 90890-01135	Crankcase separating tool This tool is used to remove the crankshaft.	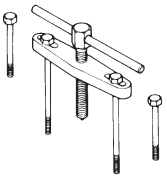
YM-01229 90890-01229	Coupling gear/Middle shaft tool This tool is needed when removing or installing the final pinion shaft nut.	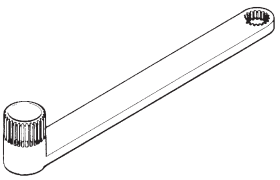
Final gear backlash band YM-01230 90890-01230 Middle gear ba-clash band YM-01231 90890-01231	Final gear backlash band This tool is needed when measuring final gear /middle gear backlash.	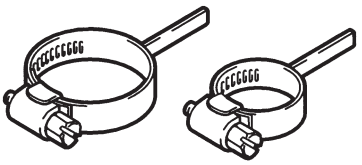
Installer pot YU-90058 90890-01274 Bolt YU-90060 90890-01275 Adaptor YM-4059 90890-04130 Spacer YM-90070 90890-04060	Crankshaft installer pot/bolt/adapter/spacer These tools are used to install the crankshaft.	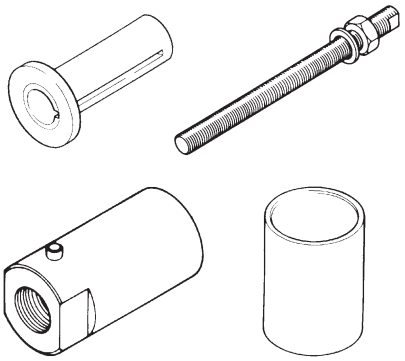

Tool No.	Tool name/How to use	Illustration
YU-01304 90890-01304	Piston pin puller This tool is used to remove the piston pin.	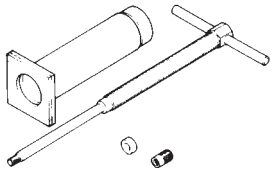
YM-01312-A 90890-01312	Fuel level gauge This gauge is used to measure the fuel level in the float chamber.	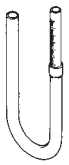
T-handle YM-01326 90890-01326 Holder YM-1300-1 90890-01460	T-handle/damper rod holder These tools are needed to loosen and tighten the damper rod holding bolt.	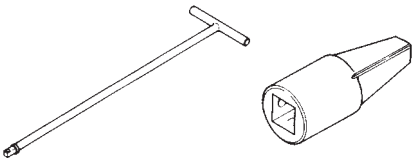
Puller YU-33270 90890-01362 Adapter YM-38145 90890-04131	Flywheel puller/adapter These tools are needed to remove the rotor.	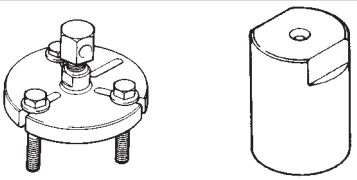
Weight YM-33963 90890-01367 Adapter YM-33968 90890-01381	Fork seal driver weight/adapter These tools are needed when installing the slide metal, oil seal and dust seal into the fork.	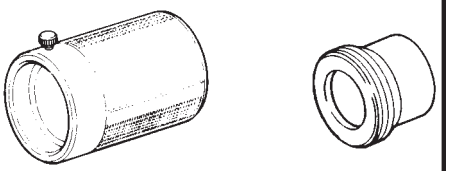
Ring nut wrench YU-33975 90890-01403 Exhaust nut wrench YU-01268 90890-01268	Ring nut wrench/ehaust and steering nut wrench This tool is needed to loosen and tighten the steering stem ring nut.	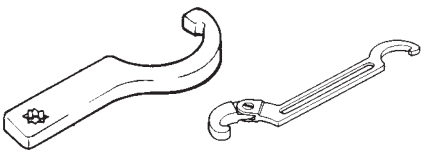
YS-01880 90890-01701	Sheave holder This tool is needed to hold the rotor when removing or installing the rotor bolt.	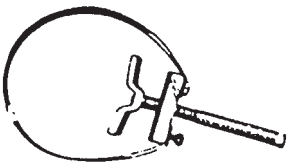
YU-33223 90890-03081	Compression gauge set These tools are needed to measure engine compression.	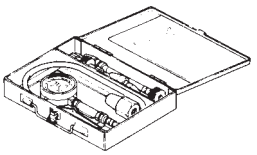
YU-08030-A 90890-03094	Vacuum gauge This gauge is needed for carburetor synchronization.	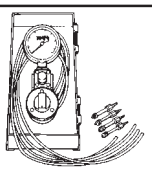

Tool No.	Tool name/How to use	Illustration
YU-03112 90890-03112	Pocket tester This instrument is needed for checking the electrical system.	
YU-08036-A 90890-03113	Engine tachometer This tool is needed for observing engine r/min.	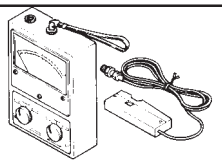
YU-33277-A 90890-03141	Timing light This tool is necessary for checking ignition timing.	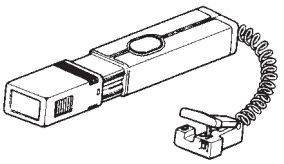
Reamer YM-01211 90890-01211 Remover YM-01200 90890-01200 Installer YM-01201 90890-04013	Valve guide reamer, remover & installer This tool is needed to remove and install the valve guide.	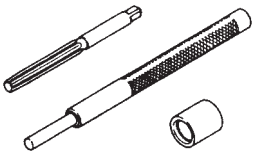
YM-04019 90890-04019	Valve spring compressor This tool is needed to remove and install the valve assemblies.	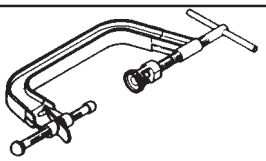
Adapter YM-90069 90890-01277 Shock puller YU-1047-3 90890-01290 Weight YU-1047-4 90890-01291	Crankshaft installer bolt adapter/armature shock puller/weight These tools are needed when removing the final pinion shaft.	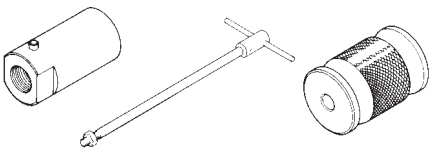
YM-04137 90890-04137	Bearing retainer wrench This tool is needed when removing or installing the middle drive shaft assembly.	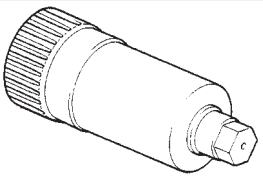
Wrench YM-04054 90890-04138 Holder YM-04055 90890-04055	Middle drive shaft nut wrench/Middle drive shaft holder These tools are needed when removing or installing the middle drive shaft bearing.	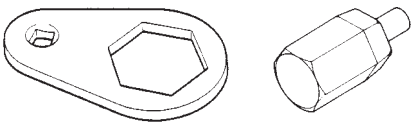
YM-04062 90890-04062	Universal joint holder This tool is needed when removing or installing the driven pinion gear nut.	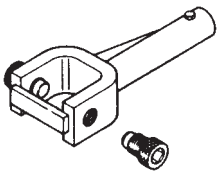

Tool No.	Tool name/How to use	Illustration
YM-33214 90890-04077	Bearing retainer wrench This tool is needed when removing or installing the final drive pinion gear assembly.	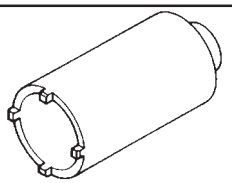
YM-91042 90890-04086	Clutch holding tool This tool is needed to hold the clutch when removing or installing the clutch boss nut.	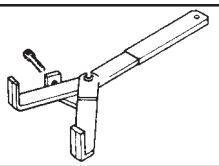
YM-33286 90890-04090	Damper spring compressor This tool is needed when removing or installing the damper spring.	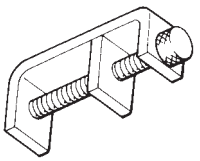
YM-34487 90890-06754	Dynamic spark tester Ignition checker This instrument is necessary for checking the ignition system components.	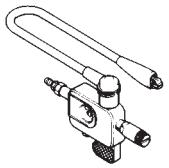
ACC-1100-15-01 90890-85505	Quick gasket ® Yamaha bond No.1215 This sealant (bond) is used on crankcase mating surfaces, etc.	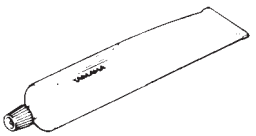
YU-03097 90890-03097	Dial gauge This tool is used to measure the middle gear backlash.	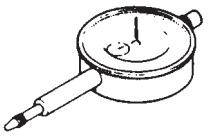
YU-03009 90890-03009	Micrometer (75 √ 100 mm) This tool is used to measure the piston skirt diameter.	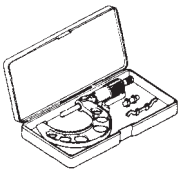
YU-03017 90890-03017	Cylinder bore gauge (50 √ 100 mm) This tool is used to measure the cylinder bore.	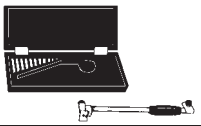

CHAPTER 2.
SPECIFICATIONS

GENERAL SPECIFICATIONS 2-1

MAINTENANCE SPECIFICATIONS 2-4
ENGINE 2-4
CHASSIS 2-14
ELECTRICAL 2-18

CONVERSION TABLE / GENERAL TIGHTENING TORQUE SPECIFICATIONS 2-20

LUBRICATION POINTS AND LUBRICANT TYPES 2-21
ENGINE 2-21
CHASSIS 2-22

LUBRICATION DIAGRAMS 2-23

CABLE ROUTING 2-26

SPECIFICATIONS

GENERAL SPECIFICATIONS

Item	Standard
Model code:	XVS1100 : 5EL5 (For U.S.A) 5EL6 (For CAL) 5EL7 (For CAN)
Dimensions: Overall length Overall width Overall height Seat height Wheelbase Minimum ground clearance Minimum turning radius	 2,405 mm (94.7 in) 895 mm (35.2 in) 1,095 mm (43.1 in) 690 mm (27.2 in) 1,640 mm (64.6 in) 145 mm (5.7 in) 3,200 mm (126.0 in)
Basic weight: With oil and a full fuel tank	 275 kg (606.4 lb)
Engine: Engine type Cylinder arrangement Displacement Bore √ stroke Compression ratio Compression pressure (STD) Starting system	 Air cooled 4-stroke, SOHC V-type 2-cylinder 1.063 L 95 √ 75mm (3.74 √ 2.95 in) 8.3 : 1 1,000 kPa (10 kg/cm^2, 142 psi) at 400 r/min Electric starter
Lubrication system:	Wet sump
Oil type or grade: Engine oil 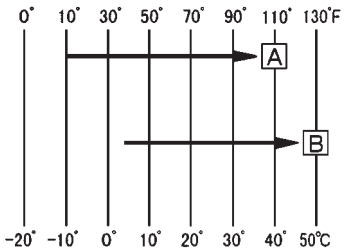 	 Yamalube 4 (20W40) or SAE20W40 type SE motor oil (5°C (40°F) or higher) Yamalube 4 (10W30) or SAE10W30 type SE motor oil (–10°C (10°F) or higher)
Final gear oil:	SAE80API “GL-4” Hypoid Gear Oil
Oil quantity: Engine oil Periodic oil change With oil filter replacement Total amount Final gear case oil Total amount	 3.0 L (2.6 Imp qt, 3.2 US qt) 3.1 L (2.7 Imp qt, 3.3 US qt) 3.6 L (3.2 Imp qt, 3.8 US qt) 0.2 L (0.18 Imp qt, 0.21 US qt)
Air filter:	Dry type element
Fuel: Type Fuel tank capacity Fuel reserve amount	 Unleaded gasoline 17 L (3.7 Imp gal, 4.5 US gal) 4.5 L (1.0 Imp gal, 1.2 US gal)

Item		Standard
Carburetor:		
Type/quantity		BSR37/2
Manufacturer		MIKUNI
Spark plug:		
Type		BPR7ES/W22EPR–U
Manufacturer		NGK/DENSO
Spark plug gap		0.7 ~ 0.8 mm (0.028 ~ 0.031 in)
Clutch type:		Wet, multiple-disc
Transmission:		
Primary reduction system		Spur gear
Primary reduction ratio		78/47 (1.660)
Secondary reduction system		Shaft drive
Secondary reduction ratio		44/47 √ 19/18 √ 32/11 (2.875)
Transmission type		Constant mesh 5-speed
Operation		Left foot operation
Gear ratio	1st	40/17 (2.353)
	2nd	40/24 (1.667)
	3rd	36/28 (1.286)
	4th	32/31 (1.032)
	5th	29/34 (0.853)
Chassis:		
Frame type		Double cradle
Caster angle		33°
Trail		136 mm (5.4 in)
Tire:		
Type		With tube
Size	front	110/90-18 61S
	rear	170/80-15M/C 77S
Manufacturer	front	BRIDGESTONE/DUNLOP
	rear	BRIDGESTONE/DUNLOP
Type	front	EXEDRA L309/K555F
	rear	EXEDRA G546G/K555
Maximum load-except motorcycle:		200 kg (441 lb)
Tire pressure (cold tire):		
0 ~ 90 kg (0 ~ 198 lb) load *		
	front	200 kPa (2.00 kg/cm^2, 28.5 psi)
	rear	225 kPa (2.25 kg/cm^2, 32.0 psi)
90 kg (198 lb) ~ Maximum load *		
	front	225 kPa (2.25 kg/cm^2, 32.0 psi)
	rear	250 kPa (2.50 kg/cm^2, 35.6 psi)
		* Load is the total weight of the cargo, rider, passenger and accessories.
Brake:		
Front brake	type	Dual disc brake
	operation	Right hand operation
Rear brake	type	Single disc brake
	operation	Right foot operation

Item	Standard
Suspension:	
Front suspension	Telescopic fork
Rear suspension	Swingarm (link suspension)
Shock absorber:	
Front shock absorber	Coil spring/Oil damper
Rear shock absorber	Coil spring/Gas-oil damper
Wheel travel:	
Front wheel travel	140 mm (5.5 in)
Rear wheel travel	113 mm (4.4 in)
Electrical:	
Ignition system	T.C.I. (digital)
Generator system	A.C. magneto
Battery type	GT14B-4
Battery capacity	12 V 12 AH
Headlight type:	Bulb type (halogen)
Bulb wattage × quantity:	
Headlight	12 V 60 W/55 W × 1
Tail/brake light	12 V 27 W/8 W × 1
Front turn signal/position light	12 V 27 W/8 W × 2
Rear turn signal light	12 V 27 W × 2
Licence light	12 V 8 W × 1
Meter light	14 V 1.4 W × 2
Neutral indicator light	12 V 1.7 W × 1
High beam indicator light	12 V 1.7 W × 1
Turn indicator light	12 V 1.7 W × 1
Oil level caution light	12 V 1.7 W × 1
Engine warning light	12 V 1.7 W × 1

MAINTENANCE SPECIFICATIONS
ENGINE

Item	Standard	Limit
Cylinder head: Warp limit* 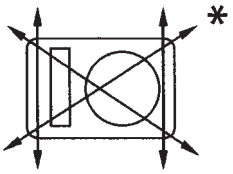	•••	0.03 mm (0.0012 in)
Cylinder: Bore size 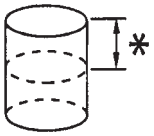 Measuring point*	95.00 ~ 95.01 mm (3.7402 ~ 3.7405 in) 40 mm (1.57 in)	95.1 mm (3.7441 in) •••
Camshaft: Drive method Cam cap inside diameter Camshaft outside diameter Shaft-to-cap clearance Cam dimensions 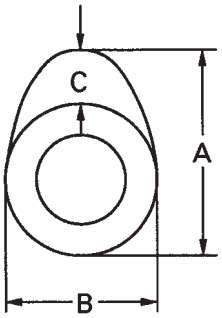	 Chain drive (left & right) 25.000 ~ 25.021 mm (0.9843 ~ 0.9851 in) 24.96 ~ 24.98 mm (0.9827 ~ 0.9835 in) 0.020 ~ 0.061 mm (0.0008 ~ 0.0024 in)	 ••• ••• ••• •••
Intake "A" "B" "C" Exhaust "A" "B" "C" Camshaft runout limit 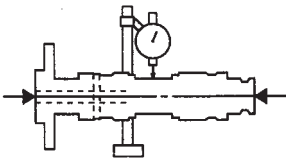	39.112 ~ 39.212 mm (1.5398 ~ 1.5438 in) #1: 32.093 ~ 32.193 mm (1.2635 ~ 1.2674 in) #2: 32.127 ~ 32.227 mm (1.2648 ~ 1.2688 in) 7.162 mm (0.2820 in) 39.145 ~ 39.245 mm (1.5411 ~ 1.5451 in) 32.200 ~ 32.300 mm (1.2677 ~ 1.2717 in) 7.195 mm (0.2833 in) •••	39.012 mm (1.5359 in) #1: 31.993 mm (1.2596 in) #2: 32.027 mm (1.2609 in) 7.012 mm (0.2761 in) 39.045 mm (1.5372 in) 32.100 mm (1.2638 in) 7.045 mm (0.2774 in) 0.03mm (0.0012 in)

Item		Standard	Limit
Timing chain:			
Timing chain type/No. of links		SILENT CHAIN/98L	•••
Timing chain adjustment method		Automatic	•••
Rocker arm/rocker arm shaft:			
Bearing inside diameter		14.000 ~ 14.018 mm (0.0512 ~ 0.5519 in)	14.036 mm (0.5526 in)
Shaft outside diameter		13.985 ~ 13.991 mm (0.5506 ~ 0.5508 in)	13.95 mm (0.5492 in)
Arm-to-shaft clearance		0.009 ~ 0.033 mm (0.0006 ~ 0.0013 in)	0.086 mm (0.0034 in)
Valve, valve seat, valve guide:			
Valve clearance (cold)	IN	0.07 ~ 0.12 mm (0.0028 ~ 0.0047 in)	•••
	EX	0.12 ~ 0.17 mm (0.0047 ~ 0.0067 in)	•••
Valve dimensions:			
"A" head diameter	IN	47.0 ~ 47.2 mm (1.850 ~ 1.858 in)	•••
	EX	39.0 ~ 39.2 mm (1.535 ~ 1.543 in)	•••
"B" face width	IN	2.1 mm (0.083 in)	•••
	EX	2.1 mm (0.083 in)	•••
"C" seat width	IN	1.2 ~ 1.4 mm (0.047 ~ 0.055 in)	1.8 mm (0.071 in)
	EX	1.2 ~ 1.4 mm (0.047 ~ 0.055 in)	1.8 mm (0.071 in)
"D" margin thickness	IN	1.1 ~ 1.5 mm (0.043 ~ 0.060 in)	0.8 mm (0.031 in)
	EX	1.1 ~ 1.5 mm (0.043 ~ 0.060 in)	0.8 mm (0.031 in)
Stem outside diameter	IN	7.975 ~ 7.990 mm (0.3140 ~ 0.3146 in)	•••
	EX	7.960 ~ 7.975 mm (0.3134 ~ 0.3140 in)	•••
Guide inside diameter	IN	8.000 ~ 8.012 mm (0.3150 ~ 0.3154 in)	•••
	EX	8.000 ~ 8.012 mm (0.3150 ~ 0.3154 in)	•••
Stem-to-guide clearance	IN	0.010 ~ 0.037 mm (0.0004 ~ 0.0015 in)	0.08 mm (0.0031 in)
	EX	0.025 ~ 0.052 mm (0.0010 ~ 0.0020 in)	0.10 mm (0.0040 in)

Head Dia | Face width | Seat Width | Margin Thickness

Item		Standard	Limit
Stem runout limit		•••	0.03 mm (0.0012 in)
Valve seat width	IN	1.2 ~ 1.4 mm (0.047 ~ 0.055 in)	2.0 mm (0.079 in)
	EX	1.2 ~ 1.4 mm (0.047 ~ 0.055 in)	2.0 mm (0.079 in)
Valve spring:			
Free length	IN	44.6 mm (1.76 in)	43.5 mm (1.71 in)
	EX	44.6 mm (1.76 in)	43.5 mm (1.71 in)
Set length (valve closed)	IN	40 mm (1.57 in)	•••
	EX	40 mm (1.57 in)	•••
Compressed pressure (installed)	IN	160.7 N (16.4 kg, 36.16 lb)	•••
	EX	160.7 N (16.4 kg, 36.16 lb)	•••
Tilt limit *	IN	•••	2.5°/1.9mm (2.5°/0.075 in)
	EX	•••	2.5°/1.9mm (2.5°/0.075 in)
Direction of winding (top view)	IN	Clockwise	•••
	EX	Clockwise	•••
Piston:			
Piston to cylinder clearance		0.025 ~ 0.050 mm (0.0010 ~ 0.0020 in)	0.15 mm (0.0060 in)
Piston size “D”		94.960 ~ 94.975 mm (3.7386 ~ 3.7392 in)	•••
Measuring point “H”		5 mm (0.197 in)	•••
Piston off-set		0 mm (0.00 in)	•••

Item	Standard	Limit
Piston pin bore inside diameter	22.004 ~ 22.015 mm	•••
Piston pin outside diameter	(0.8663 ~ 0.8667 in)	
	21.991 ~ 22.000 mm	•••
	(0.8658 ~ 0.8661 in)	
Piston rings:		
Top ring: 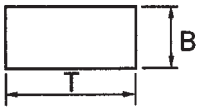		
Type	Plain	•••
Dimensions (B √ T)	1.5 √ 3.8 mm (0.059 √ 0.150 in)	•••
End gap (installed)	0.3 ~ 0.5 mm	0.8 mm
	(0.012 ~ 0.020 in)	(0.031 in)
Side clearance (installed)	0.04 ~ 0.08 mm	0.1 mm
	(0.002 ~ 0.003 in)	(0.004 in)
2nd ring: 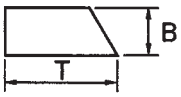		
Type	Taper	•••
Dimensions (B √ T)	1.2 √ 3.8 mm (0.047 √ 0.150 in)	•••
End gap (installed)	0.30 ~ 0.45 mm	0.8 mm
	(0.012 ~ 0.018 in)	(0.031 in)
Side clearance	0.03 ~ 0.07 mm	0.1 mm
	(0.001 ~ 0.003 in)	(0.004 in)
Oil ring: 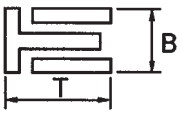		
Dimensions (B √ T)	2.5 √ 3.4 mm (0.098 √ 0.134 in)	•••
End gap (installed)	0.2 ~ 0.7 mm (0.008 ~ 0.03 in)	•••
Connecting rod:		
Oil clearance	0.044 ~ 0.073 mm (0.0017 ~ 0.0029 in)	•••
Color code (corresponding size)	①Blue ② Black ③Brown ④Green ⑤Yellow	•••
Crankshaft: 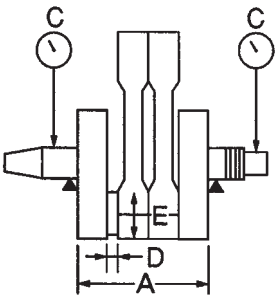		
Crank width “A”	101.95 ~ 102.00 mm (4.014 ~ 4.016 in)	•••
Runout limit “C”	•••	0.02 mm
		(0.009 in)
Big end side clearance “D”	0.320 ~ 0.474 mm (0.0126 ~ 0.0187 in)	•••

Item		Standard	Limit
Clutch:			
Friction plate thickness		2.9 ~ 3.1 mm (0.114 ~ 0.122 in)	2.8 mm (0.11 in)
Quantity		8	•••
Clutch plate thickness/Warp limit		2.5 ~ 2.7 mm (0.098 ~ 0.106 in)	0.1 mm (0.004 in)
Quantity		1	•••
Clutch plate thickness/Warp limit		1.9 ~ 2.1 mm (0.075 ~ 0.083 in)	0.1 mm (0.004 in)
Quantity		7	•••
Clutch spring free length		7.2 mm (0.283 in)	6.5 mm (0.256 in)
Quantity		1	•••
Clutch housing thrust clearance		0.05 ~ 0.40 mm (0.002 ~ 0.016 in)	•••
Clutch housing radial clearance		0.010 ~ 0.044 mm (0.0004 ~ 0.0017 in)	•••
Clutch release method		Inner push, screw push	•••
Push rod bending limit		•••	0.5 mm (0.02 in)
Transmission:			
Main axle deflection limit		•••	0.08 mm (0.003 in)
Drive axle deflection limit		•••	0.08 mm (0.003 in)
Shifter:			
Shifter type		Guide bar	•••
Shift fork thickness		5.76 ~ 5.89 mm (0.227 ~ 0.232 in)	•••
Carburetor:			
I. D. mark		5EL5 20 (USA, CAN)	•••
		5EL6 30 (CAL)	•••
Main jet	(M.J)	#1: #110, #2: #112.5	•••
Main air jet	(M.A.J)	#55	•••
Jet needle	(J.N)	#1, 2: 5DL 43-53-1	•••
Needle jet	(N.J)	P-0M	•••
Pilot air jet	(P.A.J.1)	#63.8	•••
	(P.A.J.2)	#145	•••
Pilot outlet	(P.O)	1.0	•••
Pilot jet	(P.J)	#17.5	•••
Bypass 1	(B.P.1)	0.8	•••
Bypass 2	(B.P.2)	0.8	•••
Bypass 3	(B.P.3)	0.8	•••
Valve seat size	(V.S)	1.2	•••
Starter jet	(G.S.1)	#42.5	•••
Starter jet	(G.S.2)	0.8	•••
Throttle valve size	(Th.V)	#125	•••
Fuel level (above the line on the float chamber)	(F.L)	4 ~ 5 mm (0.16 ~ 0.20 in)	•••
Engine idle speed		950 ~ 1,050 r/min	•••
Intake vacuum		34.7 ~ 37.3 kPa (260 ~ 280 mmHg)	•••
Engine oil temperature		75 ~ 85°C (167 ~ 185°F)	•••
Fuel pump:			
Type		Electrical type	•••
Model/manufacturer		UC-Z6M/MITSUBISHI	•••
Consumption amperage	<max>	0.8 A	•••
Output pressure		12 kPa (0.12 kg/cm^2, 2 psi)	•••

Item	Standard	Limit
Lubrication system:		
Oil filter type	Paper type	•••
Oil pump type	Trochoid type	•••
Tip clearance “A” or “B”	0.03 ~ 0.09 mm (0.001 ~ 0.004 in)	0.15 mm (0.006 in)
Side clearance	0.03 ~ 0.08 mm (0.001 ~ 0.003 in)	0.15 mm (0.006 in)
Relief valve operating pressure	450 ~ 550 kPa (4.5 ~ 5.5 kg/cm^2, 64.0 ~ 78.2 psi)	•••
Shaft drive:		
Middle gear backlash	0.1 ~ 0.2 mm (0.004 ~ 0.008 in)	•••
Final gear backlash	0.1 ~ 0.2 mm (0.004 ~ 0.008 in)	•••

Item	Standard

Lubrication chart:

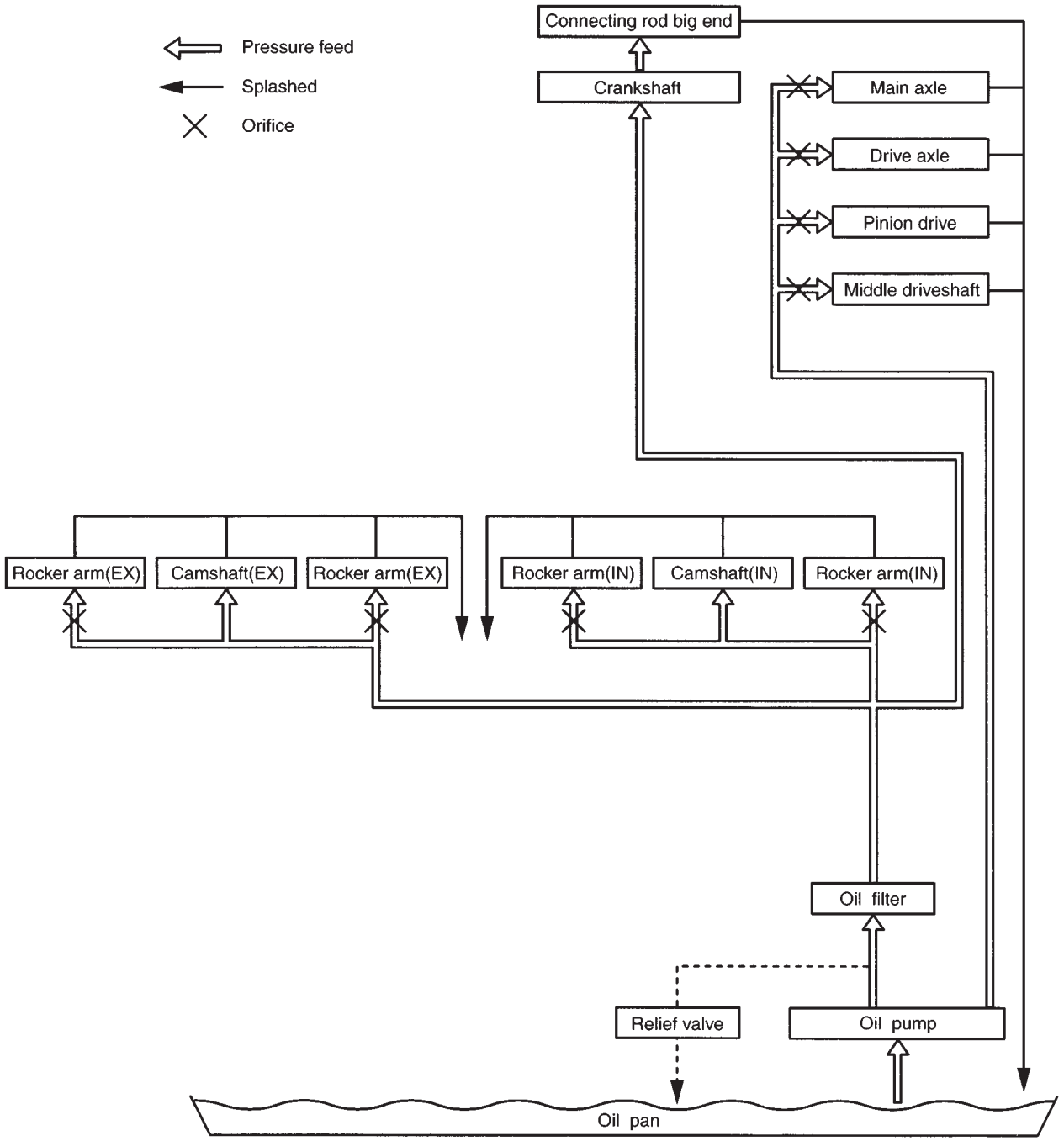

Cylinder head tightening sequence:

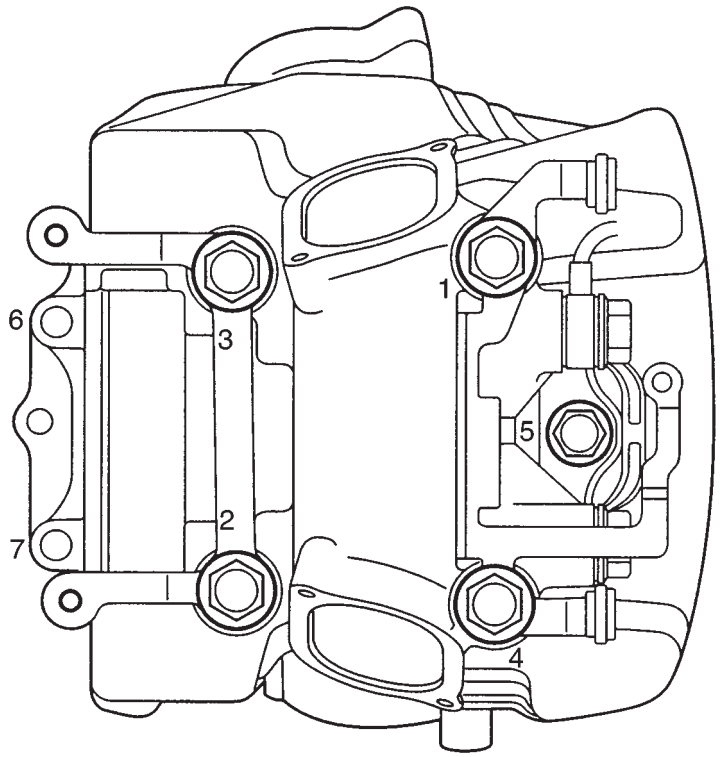

Crankcase tightening sequence:

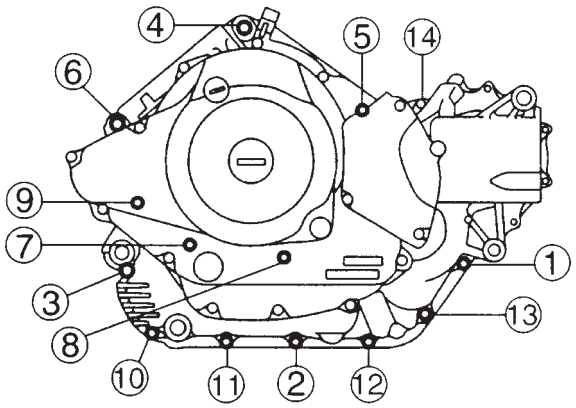

Left crankcase

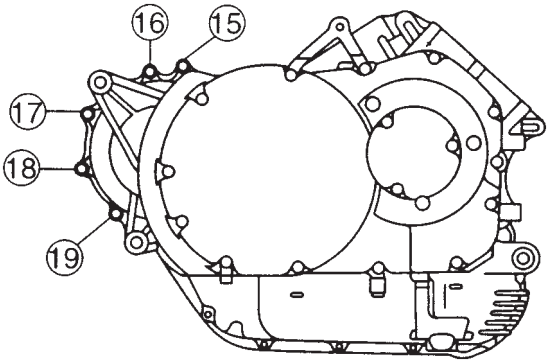

Right crankcase

Tightening torques

Part to be tightened	Part name	Thread size	Q'ty	Tightening torque			Remarks
				Nm	m•kg	ft•lb	
Cylinder head	Nut	M12	8	50	5.0	36	E
Cylinder head	Nut	M10	2	35	3.5	25	
Plate	Bolt	M8	2	20	2.0	14	
Cylinder head cover	Screw	M6	4	4	0.4	2.9	
Cylinder head (exhaust pipe)	Stud bolt	M8	4	12.5	1.25	9.0	
Rocker arm shaft	Union bolt	M16	2	37.5	3.75	27	
Camshaft sprocket cover	Bolt	M6	4	10	1.0	7.2	
Tappet cover	Bolt	M6	8	10	1.0	7.2	
Rocker arm shaft (oil passage)	Bolt	M16	4	38	3.8	27	
Stopper plate (camshaft)	Bolt	M8	4	20	2.0	14	Use lock washer
Spark plug	—	M14	2	20	2.0	14	
Cylinder	Bolt	M6	2	10	1.0	7.2	
Lower cylinder head cover	Bolt	M6	6	10	1.0	7.2	
Upper cylinder head cover	Screw	M6	8	5	0.5	3.6	
Connecting rod	Nut	M9	4	48	4.8	35	M
Rotor	Nut	M16	1	175	17.5	127	
Valve adjusting locknut	Nut	M8	4	27	2.7	20	
Camshaft sprocket	Bolt	M10	2	55	5.5	40	
Timing chain tensioner	Bolt	M6	4	10	1.0	7.2	
Timing chain tentioner cap	Bolt	M6	2	8	0.8	5.8	
Timing chain guide	Bolt	M6	4	10	1.0	7.2	
Oil pump	Bolt	M6	3	10	1.0	7.2	
Oil strainer cover	Bolt	M6	3	10	1.0	7.2	
Oil filter cover	Bolt	M6	5	10	1.0	7.2	
Oil pump gear	Bolt	M6	1	12	1.2	8.7	
Oil pump cap	Bolt	M6	1	10	1.0	7.2	
Oil deliuery pipe (cylinder head)	Union bolt	M16	2	20	2.0	14	
(crankcase)	Union bolt	M10	1	20	2.0	14	
Drain bolt	—	M14	1	43	4.3	31	
Carburetor cover	Bolt	M5	2	7	0.7	5.1	
Air filter case stay	Bolt	M6	2	10	1.0	7.2	
Air filter case assembly	Bolt	M5	3	2	0.2	1.4	
Exhaust pipe joint and cylinder head	Nut	M8	4	20	2.0	14	
Exhaust pipe joint and muffler assembly	Bolt	M8	2	20	2.0	14	
Muffler	Bolt	M10	2	25	2.5	18	
Crankcase (cylinder)	Stud bolt	M12	8	24	2.4	17	
Crankcase (cylinder)	Stud bolt	M10	2	20	2.0	14	
Crankcase	Bolt	M10	3	38.5	3.85	28	E
Crankcase	Bolt	M6	10	10	1.0	7.2	
Bearing retainer (middle drive pinion gear)	Bolt	M8	3	25	2.5	18	
Crankcase cover (left)	Bolt	M6	13	10	1.0	7.2	
Crankcase cover (right)	Bolt	M6	11	10	1.0	7.2	
Clamp	Bolt	M6	1	10	1.0	7.2	
One-way clutch	Bolt	M6	8	12	1.2	8.7	LT
Primary drive gear	Nut	M20	1	110	11.0	80	Use lock washer

Part to be tightened	Part name	Thread size	Q'ty	Tightening torque			Remarks
				Nm	m•kg	ft•lb	
Clutch spring	Bolt	M6	6	8	0.8	5.8	
Clutch adjuster	Nut	M8	1	12	1.2	8.7	
Clutch boss	Nut	M20	1	70	7.0	51	Use lock washer
Push lever axle	Screw	M8	1	12	1.2	8.7	
Middle drive pinion gear	Nut	M44	1	110	11.0	80	Stake
Bearing retainer (middle driven shaft)	Nut	M88	1	110	11.0	80	Stake
Yoke (middle driven shaft)	Nut	M14	1	—	—		Stake
Bearing housing (middle drive shaft)	Bolt	M8	4	25	2.5	18	
Shift lever stopper	Bolt	M8	1	22	2.2	16	E Use lock washer
Guide bar stopper	Screw	M6	2	7	0.7	5.1	LT
Shift dram segment	Screw	M5	1	4	0.4	2.9	
Shift arm	Bolt	M6	1	10	1.0	7.2	
Shift pedal adjuster	Nut	M6	2	10	1.0	7.2	1 of 2 has LH thread
Stator coil	Screw	M6	3	10	1.0	7.2	LT
Pickup coil	Screw	M5	2	7	0.7	5.1	LT
Starter motor	Bolt	M6	2	10	1.0	7.2	
Neutral switch	—	M10	1	20	2.0	14	
Ignition coil	Screw	M5	4	2.5	0.25	1.8	
Speed sensor	Bolt	M6	1	7	0.7	5.1	

CHASSIS

Item		Standard	Limit
Steering system:			
Steering bearing type		Angular bearing	•••
Front suspension:			
Front fork travel		140 mm (5.51 in)	•••
Fork spring free length		356.9 mm (14.05 in)	350 mm (13.78 in)
Fitting length		319.4 mm (12.57 in)	•••
Collar length		183 mm (7.20 in)	•••
Spring rate	(K1)	8.8 N/mm (0.9 kg/mm, 50.40 lb/in)	•••
	(K2)	12.7 N/mm (1.3 kg/mm, 72.80 lb/in)	•••
Stroke	(K1)	0 ~ 77.5 mm (0 ~ 3.05 in)	•••
	(K2)	77.5 ~ 140 mm (3.05 ~ 5.51 in)	•••
Optional spring		No	•••
Oil capacity		0.464 L (464 cm^3, 16.4 Imp OZ, 15.7 US OZ)	•••
Oil level		108 mm (4.25 in)	•••
Oil grade		Fork oil 10W or equivalent	•••
Rear suspension:			
Shock absorber travel		113 mm (4.45 in)	•••
Spring free length		179.5 mm (7.07 in)	•••
Fitting length		163 mm (6.42 in)	•••
Spring rate	(K1)	117.7 N/mm (12 kg/mm, 672 lb/in)	•••
Stroke	(K1)	0 ~ 50 mm (0 ~ 1.97 in)	•••
Optional spring		No	•••
Swingarm:			
Free play limit	end	•••	0 mm (0.00 in)
Front wheel:			
Type		Spoke wheel	•••
Rim size		18 √ 2.15	•••
Rim material		Steel	•••
Rim runout limit	radial	•••	1.0 mm (0.04 in)
	lateral	•••	0.5 mm (0.02 in)
Rear wheel:			
Type		Spoke wheel	•••
Rim size		15M/C √ MT4.50	•••
Rim material		Steel	•••
Rim runout limit	radial	•••	1.0 mm (0.04 in)
	lateral	•••	0.5 mm (0.02 in)

Item	Standard	Limit
Front brake:		
Type	Dual disc	•••
Disc outside diameter √ thickness	298 √ 5 mm (11.7 √ 0.20 in)	4.5 mm (0.18 in)
Disc deflection limit	•••	0.15 mm (0.006 in)
Pad thickness inner	6.2 mm (0.244 in)	0.8 mm (0.031 in)
Pad thickness outer	6.2 mm (0.244 in)	0.8 mm (0.031 in)
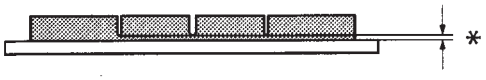		
Master cylinder inside diameter	14.0 mm (0.55 in)	•••
Caliper cylinder inside diameter	25.4 mm (0.99 in)	•••
Caliper cylinder inside diameter	30.1 mm (1.19 in)	•••
Brake fluid type	DOT 4	•••
Rear brake:		
Type	Single disc	•••
Disc outside diameter √ thickeness	282 √ 6 mm (11.10 √ 0.24 in)	5.5 mm (0.22 in)
Disc deflection limit	•••	0.15 mm (0.006 in)
Pad thickness inner	5.55 mm (0.219 in)	0.5 mm (0.020 in)
outer	5.55 mm (0.219 in)	0.5 mm (0.020 in)
Master cylinder inside diameter	12.7 mm (0.50 in)	•••
Caliper cylinder inside dimeter	42.9 mm (1.689 in)	•••
Brake fluid type	DOT 4	•••
Brake lever & brake pedal:		
Brake lever free play (at lever end)	5 ~ 8 mm (0.20 ~ 0.31 in)	•••
Brake pedal position	81.8 mm (3.22 in)	•••
Brake pedal free play	0 mm (0.00 in)	•••
Clutch lever free play (at lever end)	5 ~ 10 mm (0.20 ~ 0.39 in)	•••
Throttle grip free play	4 ~ 6 mm (0.16 ~ 0.24 in)	•••

Tightening torques

Part to be tightened	Thread size	Tightening torque			Remarks
		Nm	m•kg	ft•lb	
Upper bracket and inner tube	M8	20	2.0	14	
Lower bracket and inner tube	M10	30	3.0	22	
Upper bracket and steering shaft	M22	110	11.0	80	
Ring nut (steering shaft)	—	18	1.8	13	See NOTE
Handlebar holder (lower) and upper bracket	M12	32	3.2	23	
Handlebar holder (lower) and handlebar holder (upper)	M8	28	2.8	20	
Master cylinder (front brake)	M6	10	1.0	7.2	
Union bolt (brake hose)	M10	30	3.0	22	
Brake hose holder and lower bracket	M6	10	1.0	7.2	
Brake hose joint and brake pipe	M10	19	1.9	13	
Brake hose joint and brake hose holder	M6	10	1.0	7.2	
Front fender and outer tube	M8	10	1.0	7.2	
Headlight stay and lower bracket	M6	7	0.7	5.1	
Headlight stay and headlight	M6	8	0.8	5.8	
Front flasher light and lower bracket	M6	7	0.7	5.1	
Engine mounting:					
Frame and stay (front - upper)	M10	48	4.8	35	
Frame and stay (front - lower)	M10	48	4.8	35	
Stay and engine (front - upper)	M12	74	7.4	54	
Stay and engine (front - lower)	M10	48	4.8	35	
Frame and engine (rear - upper)	M10	48	4.8	35	
Frame and engine (rear - lower)	M10	48	4.8	35	
Down tube and frame	M10	48	4.8	35	
Ignition coil and stay	M5	4	0.4	2.9	
Muffler stay and frame	M8	30	3.0	22	
Rear shock absorber and relay arm	M10	48	4.8	35	
Rear shock absorber and frame	M10	40	4.0	29	
Pivot shaft and swingarm	M16	90	9.0	65	
Relay arm and frame	M10	48	4.8	35	
Connecting arm and relay arm	M12	48	4.8	35	
Connecting arm and swingarm	M12	48	4.8	35	
Final gear case and swingarm	M10	90	9.0	65	
Swingarm end and holder	M8	23	2.3	17	
Fuel tank and fuel cock	M6	7	0.7	5.1	
Fuel tank bracket and frame	M8	23	2.3	17	
Rider's seat	M6	7	0.7	5.1	
Passenger seat	M6	7	0.7	5.1	
Fuel tank and top cover	M5	4	0.4	2.9	
Licence bracket and rear fender stay	M6	7	0.7	5.1	
Rear fender and rear fender stay	M5	4	0.4	2.9	
Rear fender and tail/brake light	M6	6	0.6	4.3	
Rear fender stay and rear flasher light	M12	7	0.7	5.1	
Frame and rear fender	M8	26	2.6	19	
Side cover (left)	M6	7	0.7	5.1	
Battery cover	M6	7	0.7	5.1	
Side cover (right)	M6	7	0.7	5.1	
Starter relay and leads	M6	7	0.7	5.1	

Part to be tightened	Thread size	Tightening torque			Remarks
		Nm	m•kg	ft•lb	
Passenger footrest and frame	M8	26	2.6	19	
Sidestand bracket and frame	M10	64	6.4	46	
Sidestand and sidestand bracket	M10	56	5.6	41	
Sidestand switch	M5	4	0.4	2.9	
Brake pedal/footrest and frame	M6	7	0.7	5.1	
Rear brake master cylinder and master cylinder bracket	M8	23	2.3	17	
Master cylinder bracket and down tube	M8	23	2.3	17	
Footrest and frame	M10	64	6.4	46	
Front wheel axle	M16	59	5.9	43	
Front wheel axle pinch bolt	M8	20	2.0	14	
Brake caliper	M10	40	4.0	29	
Brake disc and front wheel	M8	23	2.3	17	
Caliper bleed screw	M7	6	0.6	4.3	
Rear wheel axle nut	M16	107	10.7	77	
Rear brake caliper and caliper bracket	M10	40	4.0	29	
Caliper bracket and swingarm	M10	40	4.0	29	
Brake hose union bolt	M10	30	3.0	22	
Caliper bleed screw	M8	6	0.6	4.3	
Clutch hub and damper	M10	62	6.2	45	
Final gear case stud bolt	M10	18	1.8	13	
Final gear case stud bolt	M8	9	0.9	6.5	
Bearing housing (final gear case)	M8	23	2.3	17	
Bearing housing (final gear case)	M10	40	4.0	29	
Drive pinion	M14	130	13.0	94	
Bearing retainer (final drive pinion gear)	M65	115	11.5	83	LH thread
Oil filter bolt (final gear)	M14	23	2.3	17	
Oil drain bolt (final gear)	M14	23	2.3	17	
Housing cover	M10	42	4.2	30	

NOTE:

1. First, tighten the ring nut approximately 52 Nm (5.2 m•kg, 38 ft•lb) by using the torque wrench, then loosen the ring nut completely.
2. Retighten the ring nut to specification.

ELECTRICAL

Item	Standard	Limit
Voltage:	12 V	•••
Ignition system:		
Ignition timing (B.T.D.C.)	10° at 1,000 r/min	•••
Advancer type	Digital type	•••
T.C.I.:		
Pickup coil resistance/color	189 ~ 231 Ω at 20°C (68°F)/Gray – Black	•••
T.C.I. unit model/manufacturer	J4T106/MITSUBISHI	•••
Ignition coil:		
Model/manufacturer	F6T541/MITSUBISHI	•••
Primary winding resistance	3.57 ~ 4.83 Ω at 20°C (68°F)	•••
Secondary winding resistance	10.7 ~ 14.5 kΩ at 20°C (68°F)	•••
Spark plug cap:		
Type	Resin type	•••
Resistance	10 kΩ	•••
Charging system:		
Type	A.C. magneto	•••
Model/manufacturer	F4T654/MITSUBISHI	•••
Nominal output	14 V 350 W at 5,000 r/min	•••
Stator coil resistance/color	0.36 ~ 0.44 Ω at 20°C (68°F)/White – White	•••
Voltage regulator:		
Type	Semi-conductor, short-circuit type	•••
Model/manufacturer	SH650D-11/SHINDENGEN	•••
No load regulated voltage	14.1 ~ 14.9 V	•••
Rectifier:		
Model/manufacturer	SH650D-11/SHINDENGEN	•••
Capacity	18 A	•••
Withstand voltage	200 V	•••
Battery:		
Specific gravity	1.320	•••
Electric starter system:		
Type	Constant mesh type	•••
Starter motor:		
Model/manufacturer	SM-13/MITSUBA	•••
Output	0.6 kW	•••
Armature coil resistance	0.025 ~ 0.035 Ω at 20°C (68°F)	•••
Brush overall length	10 mm (0.41 in)	5 mm (0.20 in)
Brush spring pressure	7.65 ~ 10.01 N (780 ~ 1021 g, 27.51 ~ 36.01 OZ)	•••
Commutator diameter	28 mm (1.10 in)	27 mm (1.06 in)
Mica undercut	0.7 mm (0.03 in)	•••
Starter relay:		
Model/manufacturer	MS5F-421/JIDECO	•••
Amperage rating	180 A	•••

Item	Standard	Limit
Horn:		
Type	Plane type	•••
Quantity	1	•••
Model/manufacturer	YF-12/NIKKO	•••
Maximum amperage	3 A	•••
Flasher relay:		
Type	Semi transistor type	•••
Model/manufacturer	FB257H/DENSO	•••
Self cancelling device	Yes	•••
Flasher frequency	75 ~ 95 cycle/min	•••
Wattage	27 W √ 2 + 3.4 W	•••
Oil level gauge:		
Model/manufacturer	5EL/DENSO	•••
Starting circuit cut-off relay		
Model/manufacturer	G8R-30Y-B/OMRON	•••
Fuel pump relay:		
Model/manufacturer	G8R-30Y-B/OMRON	•••
Thermostat switch:		
Model/manufacturer	4TR/NIPPON TEXAS INSTRUMENT	•••
Circuit breaker:		
Type	Fuse	•••
Amperage for individual circuit		
MAIN	30 A √ 1	•••
HEAD LIGHT	15 A √ 1	•••
SIGNALS	10 A √ 1	•••
IGNITION	10 A √ 1	•••
BACK UP	5 A √ 1	•••
Carburetor heater	15 A √ 1	•••
Reserve	30 A √ 1	•••
Reserve	15 A √ 1	•••
Reserve	10 A √ 1	•••
Reserve	5 A √ 1	•••

EAS00028

CONVERSION TABLE

All specification data in this manual are listed in SI and METRIC UNITS.
Use this table to convert METRIC unit data to IMPERIAL unit data.
Ex.

METRIC		MULTIPLIER		IMPERIAL
** mm	√	0.03937	=	** in
2 mm	√	0.03937	=	0.08 in

CONVERSION TABLE

METRIC TO IMPERIAL			
	Metric unit	Multiplier	Imperial unit
Tightening torque	m•kg m•kg cm•kg cm•kg	7.233 86.794 0.0723 0.8679	ft•lb in•lb ft•lb in•lb
Weight	kg g	2.205 0.03527	lb oz
Speed	km/hr	0.6214	mph
Distance	km m m cm mm	0.6214 3.281 1.094 0.3937 0.03937	mi ft yd in in
Volume/Capacity	cc (cm^3) cc (cm^3) lt (liter) lt (liter)	0.03527 0.06102 0.8799 0.2199	oz (IMP liq.) cu•in qt (IMP liq.) gal (IMP liq.)
Misc.	kg/mm kg/cm^2 Centigrade	55.997 14.2234 9/5 (°C) + 32	lb/in psi (lb/in^2) Fahrenheit (°F)

EAS00030

GENERAL TIGHTENING TORQUE SPECIFICATIONS

This chart specifies tightening torques for standard fasteners with a standard ISO thread pitch. Tightening torque specifications for special components or assemblies are provided for each chapter of this manual. To avoid warpage, tighten multi-fastener assemblies in a crisscross pattern and progressive stages until the specified tightening torque is reached.
Unless otherwise specified, tightening torque specifications require clean, dry threads. Components should be at room temperature.

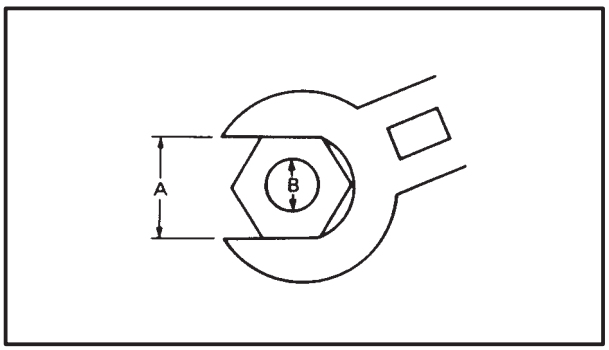

A: Distance between flats
B: Outside thread diameter

A (nut)	B (bolt)	General torque specifications		
		Nm	m•kg	ft•lb
10 mm	6 mm	6	0.6	4.3
12 mm	8 mm	15	1.5	11
14 mm	10 mm	30	3.0	22
17 mm	12 mm	55	5.5	40
19 mm	14 mm	85	8.5	61
22 mm	16 mm	130	13.0	94

EB203000

LUBRICATION POINTS AND LUBRICANT TYPES

ENGINE

Lubrication point	Symbol
Oil seal lips	LS
O-ring	LS
Bearing	E
Connecting rod bolt/nut	M
Connecting rod small end and big end	E
Crankshaft pin	E
Crankshaft journal/big end	E
Piston surface	E
Piston pin	E
Camshaft cam lobe/journal	M
Rocker arm shaft	E
Valve stem (IN, EX)	M
Valve stem end (IN, EX)	E
Timing chain drive gear shafts/sprokets	E
Oil pump rotor (inner/outer), housing	E
Idle gear surface	E
Starter idle gear	E
Starter idle gear shaft	E
Starter oneway cam	E
Middle drive gear	E
Primary driven gear	E
Push rod 1, 2	M
Transmission gear (wheel/pinion)	E
Shift cam	E
Shift fork/guide bar	E
Shift shaft assembly	E
Push rod ball	LS
Push lever assembly	LS

EB203010

CHASSIS

Lubrication point	Symbol
Steering head pipe (upper/lower), bearing	LS
Steering head pipe, bearing cover lip	LS
Steering head pipe, oil seal lip	LS
Front wheel oil seal lip (right/left)	LS
Rear wheel oil seal lip	LS
Clutch hub fitting area	LS
Rear brake pedal shaft	LS
Shift pedal shaft	LS
Sidestand bolt, sidestand sliding surface	LS
Tube guide (throttle grip) inner surface	LS
Brake lever pivot bolt, contact surface	LS
Clutch lever pivot bolt, contact surface	LS
Rear shock absorber (lower) oil seal lip	M
Swingarm pivot bearing inner surface	M
Swingarm pivot oil seal lip	M
Relay arm bearing, collar and oil seal	M
Drive shaft spline	M
Drive shaft dust cover	LS

EB205000

LUBRICATION DIAGRAMS

① Rocker arm shaft (intake)
② Rocker arm shaft (exhaust)
③ Oil filter
④ Oil pump
⑤ Drive axle
⑥ Middle drive shaft

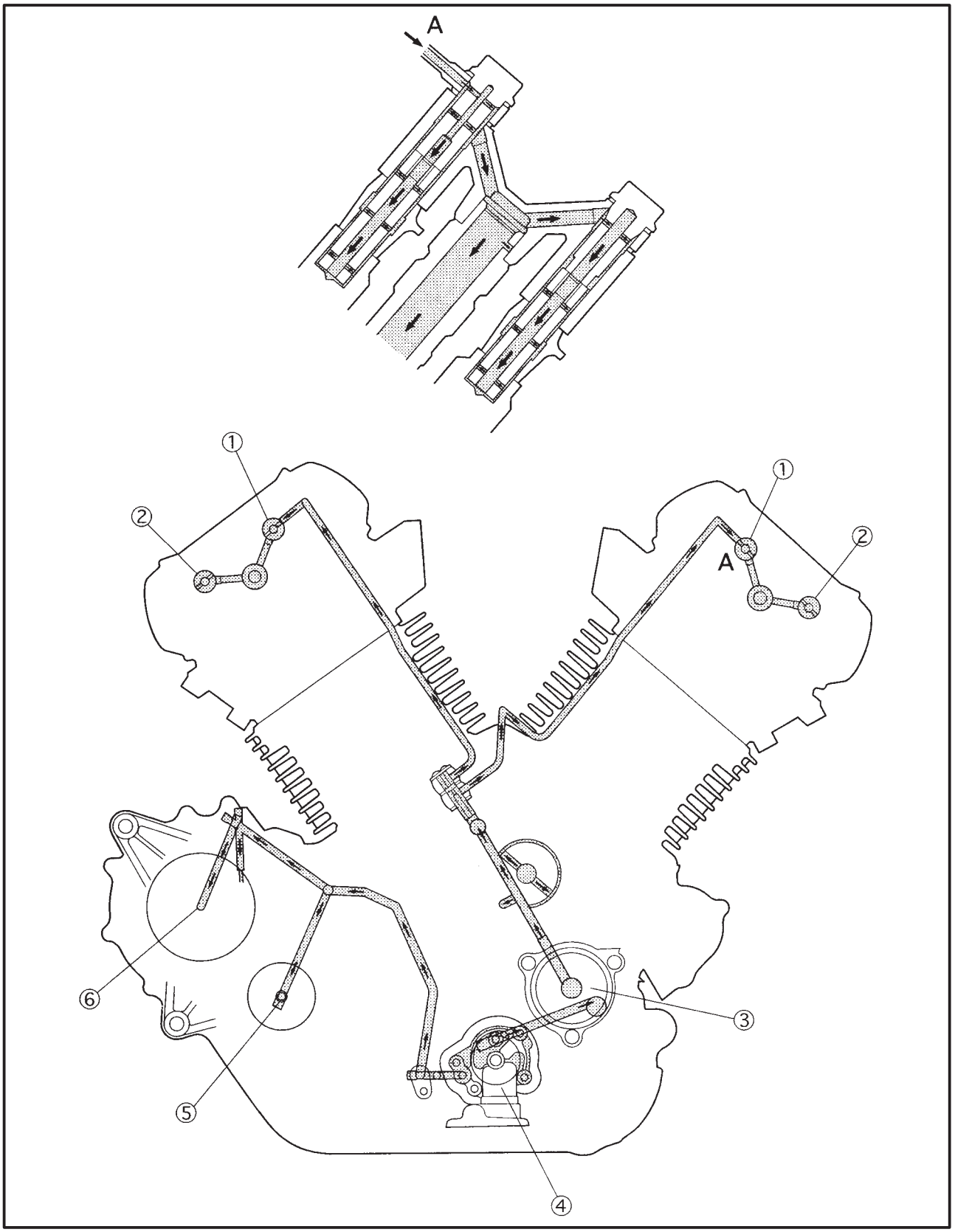

① Oil pump
② Releaf valve
③ Oil filter
④ Middle drive shaft

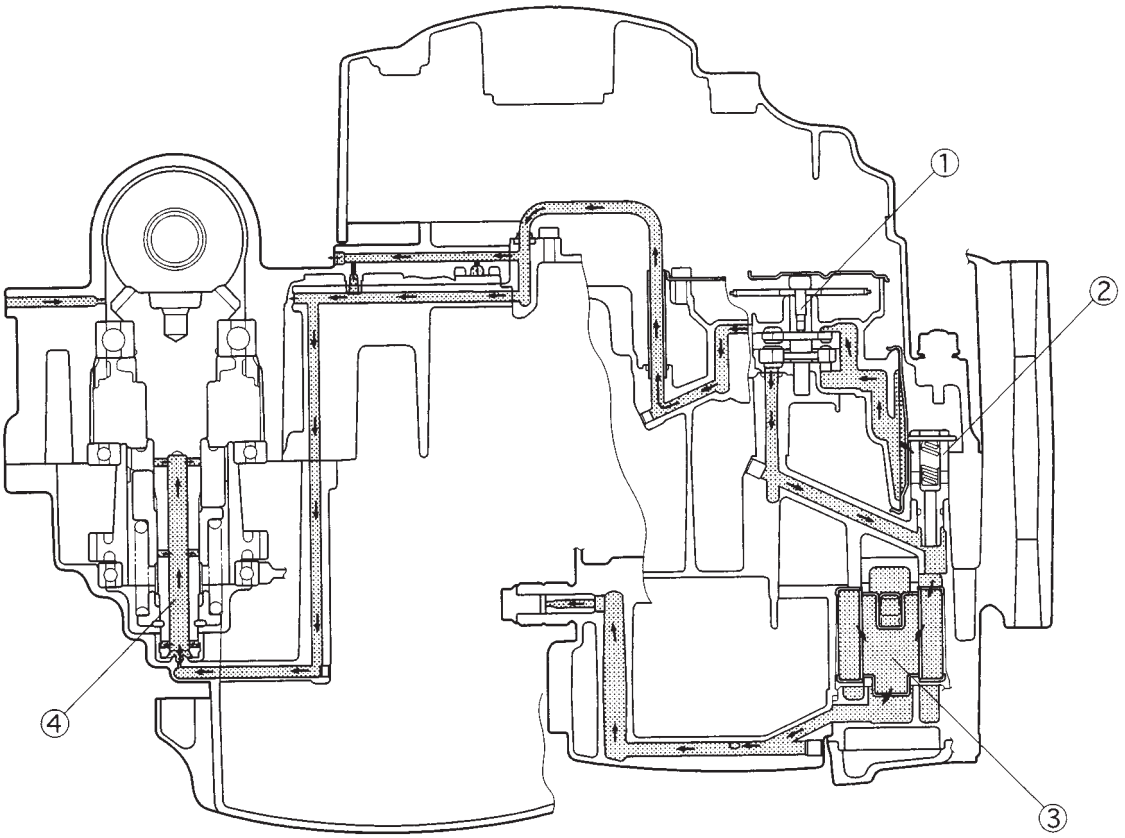

① Camshaft
② Crankshaft
③ Main axle
④ Middle drive shaft
⑤ Drive axle
⑥ Connecting rod big end

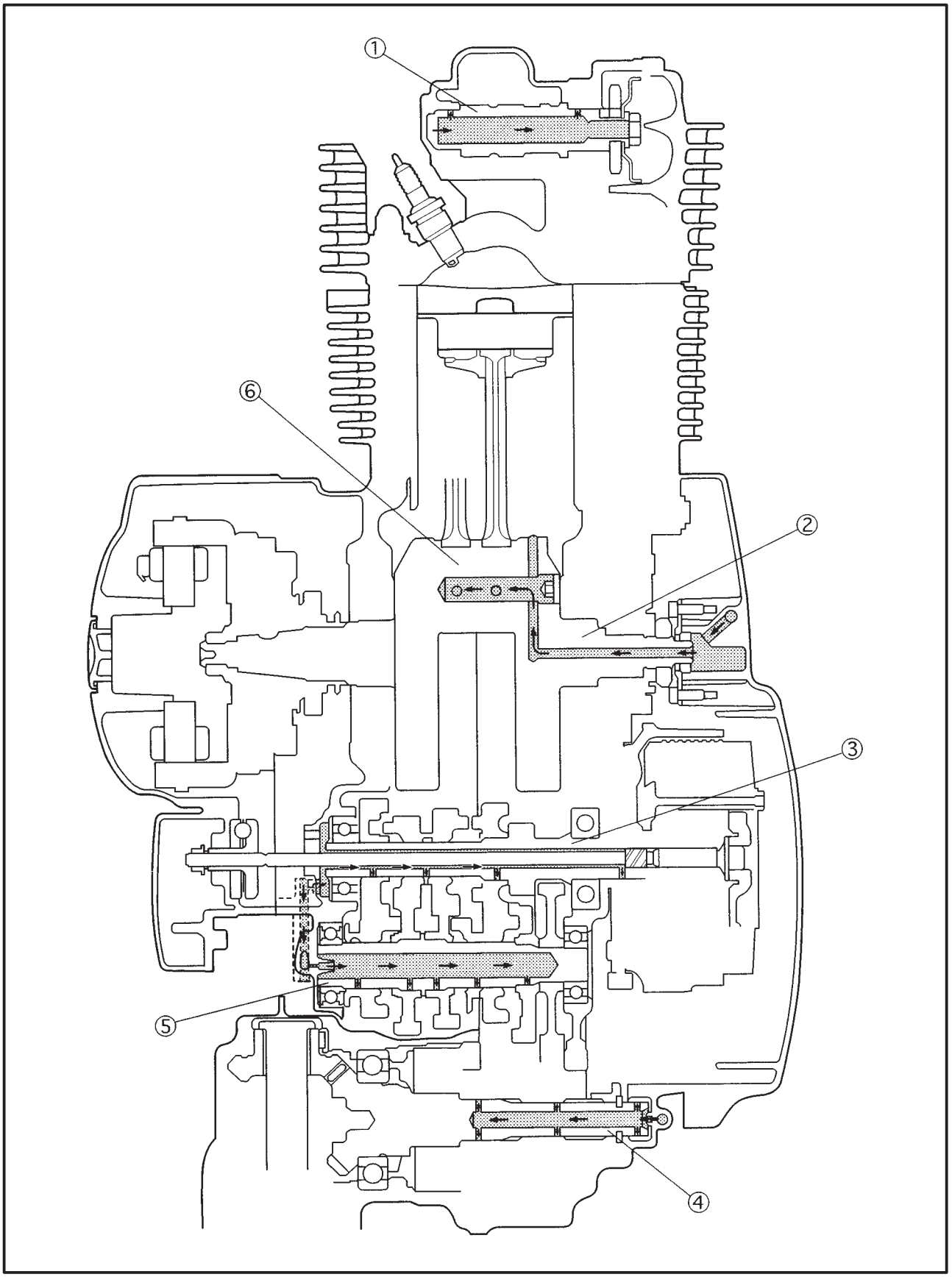

EB206000

CABLE ROUTING

① Clutch cable
② Starter cable
③ Handlebar switch lead (left)
④ Handlebar switch lead (right)
⑤ High tension code
⑥ Throttle cable
⑦ Fuel hose (fuel cock-filter)
⑧ Fuel breather hose (fuel tank-roll over valve) (for CAL)
⑨ Fuse box
⑩ Alarm connector
⑪ Fuel pump lead
⑫ Speed sensor lead
⑬ Sidestand switch lead
⑭ Neutral switch lead
⑮ Pickup coil lead
⑯ To engine
⑰ A.C. magneto lead
⑱ Ventilation hose
⑲ Sensing hose (AIS-carburetor joint)
⑳ Fuel hose (carburetor-fuel pump)
㉑ Clip
㉒ Brake hose
㉓ Heat protector
㉔ Speed meter lead
㉕ Wireharness
㉖ Purge hose (carburetor-solenoid valve) (for CAL)
㉗ Fitting plate
㉘ Fuel hose (inlet) (fuel filter-fuel pump)
㉙ Fuel hose (outlet) (carburetor-fuel pump)
㉚ Alarm connector lead
㉛ Wireharness

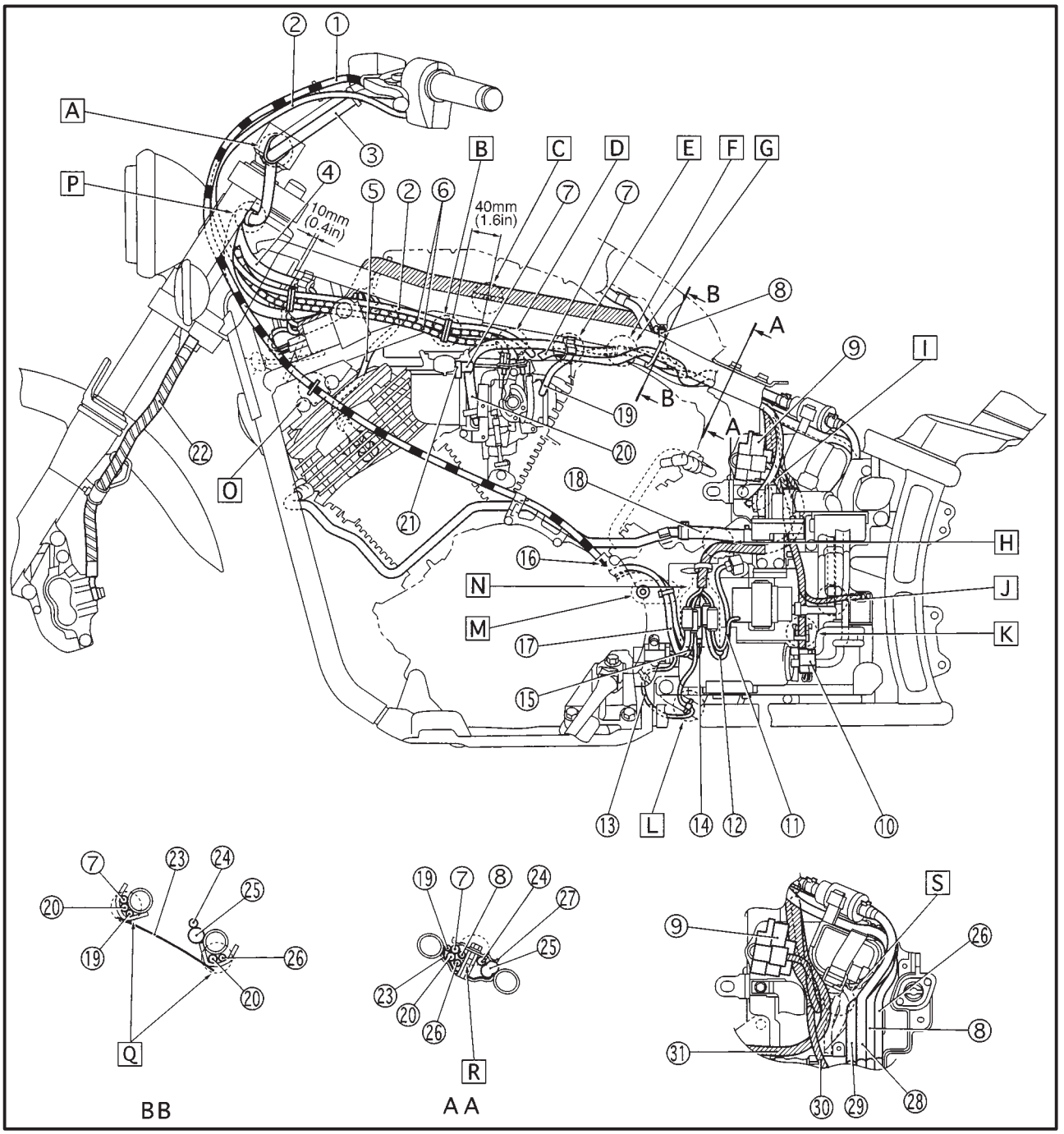

A Fasten the handlebar switch lead (left and rihgt) to the handlebar with plastic locking tie and cut the end of tie.
B Position the throtlle cable and starter cable as shown and clamp them with holder.
C Clamp the wireharness with the hook of frame side.
D When installing the pipe of throttle cable press it inside.
E Clamp the fuel hoses to the frame with the clamp.
F Change the fuel hose (fuel cock side) and fuel hose (carburetor side) between guide of frame and clamp. (carburetor side is upper)
G When connecting the sensing hose (carburetor joint-AIS) with a nozzle.
H Push the wireharness inside of the side cover.
I Push the sensing hose inside of the LID and not bend the sensing hose.

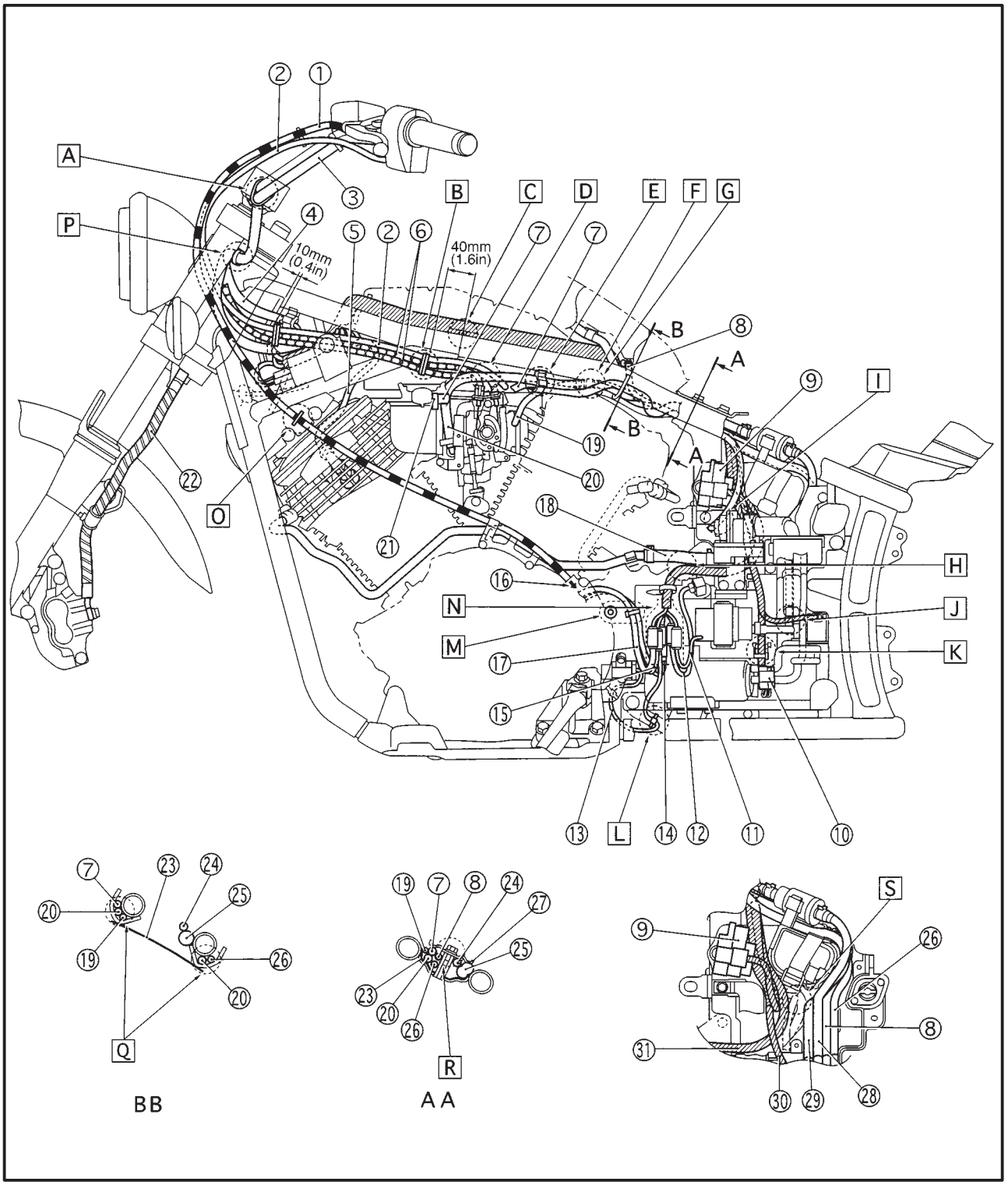

[J] Through the wireharness of solenoid valve between AIS duct and fuel hose (for CAL).
[K] Fasten the alarm lead with a plastic band on the LID.
[L] Fasten the sidestand switch lead to the bracket of LID with plastic locking tie.
[M] Fasten the lead with locking tie near the side cover.
[N] Position the all connectors inside of the connector cover.
[O] Route the clutch cable through the cable guide.
[P] Fasten the handlebar switch leads (left and right) under the handle crown with a plastic band. Set the band at four notches and install it no slacking.
[Q] Route the each hoses through the frame guide and do not pinch it.
[R] When installing the fitting plate, do not pinch the each hoses and wireharness.
[S] Wher install the AIS push the wireharness to space of rearside.

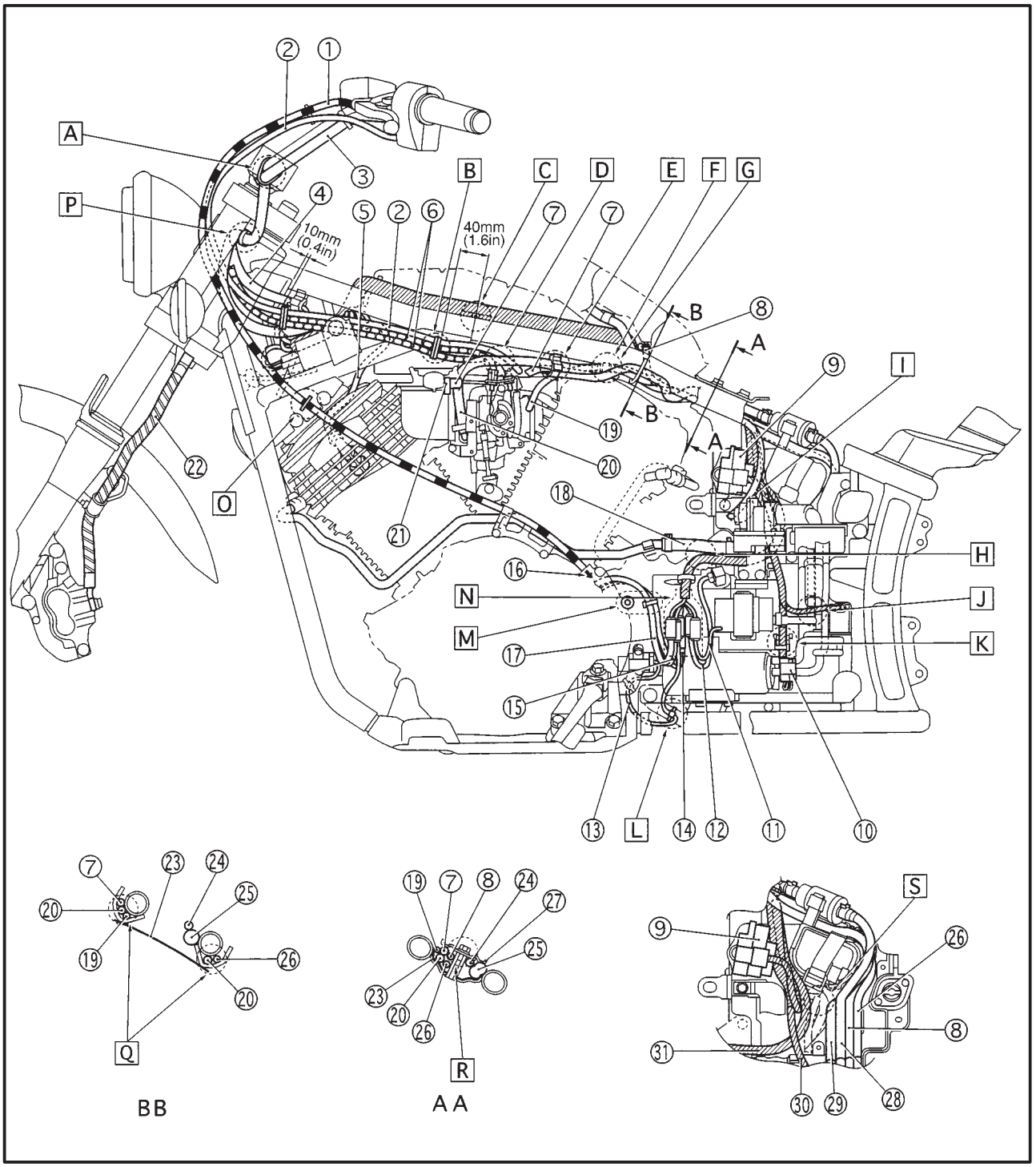

① Battery
② Battery positive (+) lead
③ Starter motor positive lead
④ Speedmeter lead
⑤ Fuel hose (carburetor-fuel pump)
⑥ High tension code
⑦ Main switch lead
⑧ Throttle cable
⑨ Brake hose
⑩ Handlebar switch lead (right)
⑪ Headlight lead
⑫ Ignition coil
⑬ Breather hose
⑭ Purge hose (carburetor-solenoid valve) (for CAL)
⑮ Rear brake switch
⑯ Reserve hose
⑰ Air filter drain hose
⑱ Delay relay
⑲ Battery negative (–) lead
⑳ Starter motor positive (+) lead
㉑ Oil level switch lead
㉒ Rear brake switch lead
㉓ Carburetor heater connecter
㉔ Light reduce relay
㉕ Rectifier/regulator
㉖ Stay. 1
㉗ Down tube
㉘ frame
㉙ Stay. 2
㉚ Battery box
㉛ Carburetor heater lead
㉜ Light reduce lelay lead

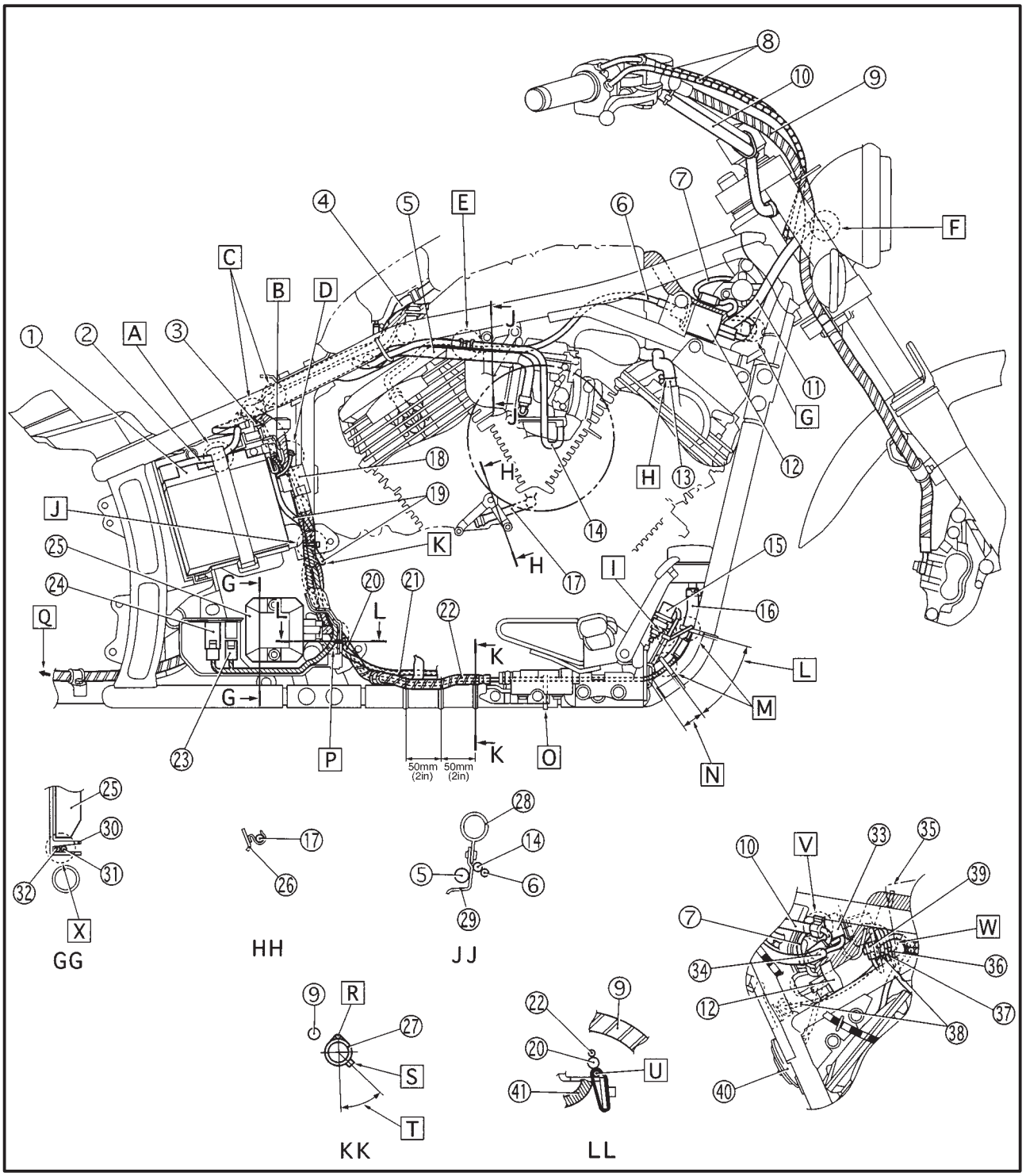

㉝ Flasher relay
㉞ Handlebar switch lead (left)
㉟ Silencer
㊱ Throttle position sensor lead
㊲ Carburetor heater lead
㊳ Thermo switch lead
㊴ Starting circuit cut-off relay
㊵ Horn
㊶ Rectifire/regulator and light (reduce relay) lead

A Clamp the battery positive (+) lead to the battery with battery band.
B Connect the battery negative (–) lead and push it in to the space between battery box and battery.
C Push the wireharness into the space between frame and starter motor relay.

D Route the rectifire/regulator lead, wireharness and starter motor positive (+) lead through the out of frame bracket and fasten them to the frame with a plastic locking tie. The place to fix must be between 0 mm (0 in) and 10 mm (0.4in) from the top of the diverging point of the lead on the harness side whitch connected the battery negative (–) lead.

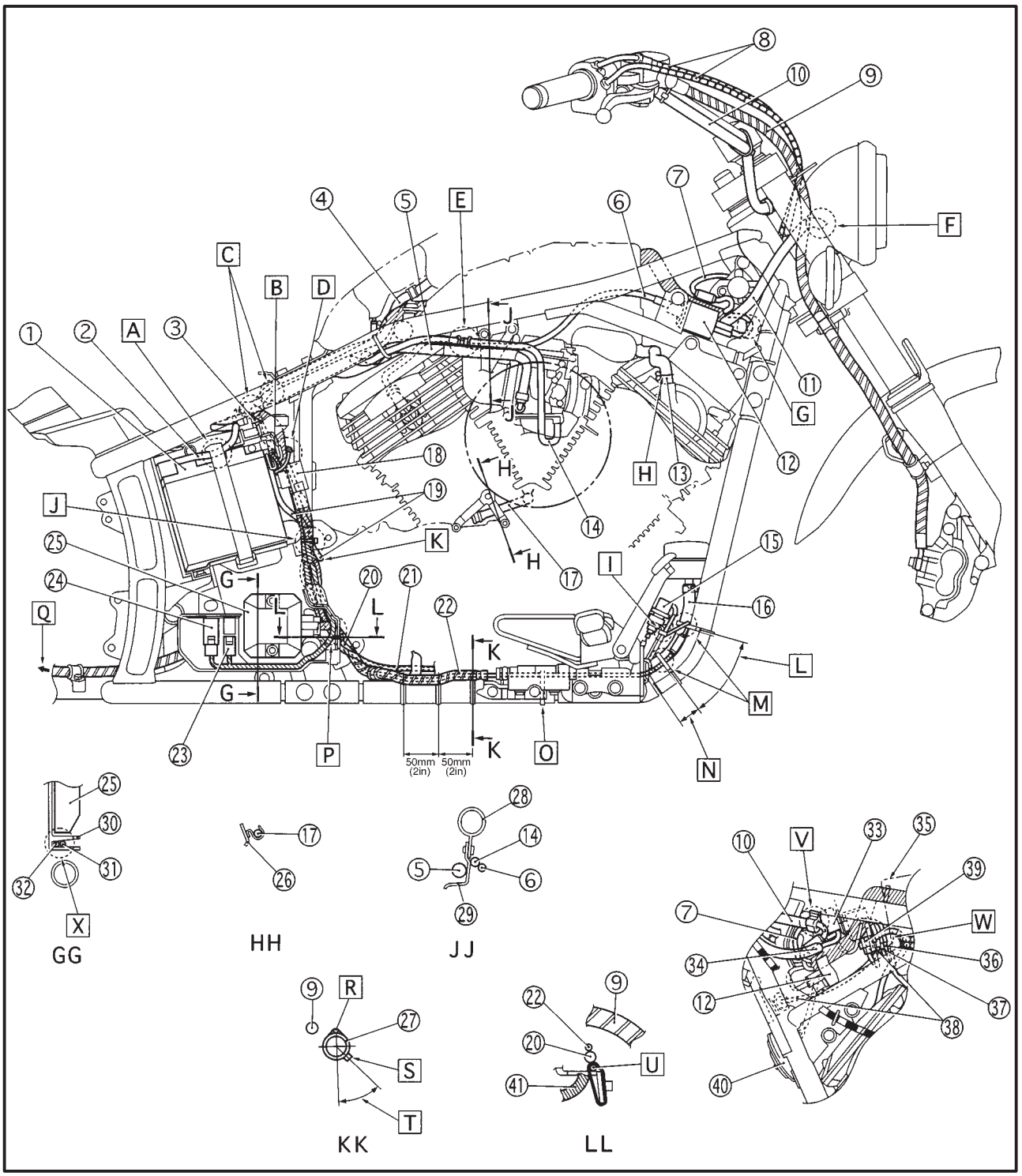

[E] Connect the purge hose (carburetor side-solenoid valve side) with joint, knob is out side of frame.
[F] Route the front turn signal/position light lead and headlight lead through the rear of headlight body hole.
[G] Connect the ignition coil lead at red tape to the right side.
[H] Knob of clip is rearside of body.
[I] Fasten the rear brake switch lead to the rear brake switch bracket with a plastic locking tie and cut of the end, inside of frame.
[J] Fasten the wireharness, starter motor positive (+) lead and battery negative (–) lead to the frame with a plastic locking tie.
[K] From the engine.
[L] About 70 mm (2.8 in)
[M] Fasten the rear brake switch lead and master cylinder reservoir hose to the down tube with a plastic locking tie, and cut the end of locking tie and position is inside of frame.
[N] About 20 mm (0.8 in) from bead end.
[O] Locate the band to forward of down tube.
[P] Route the rectifire/regulator lead and carburetor heater lead through inside of battery box hole to outside it and connect them.

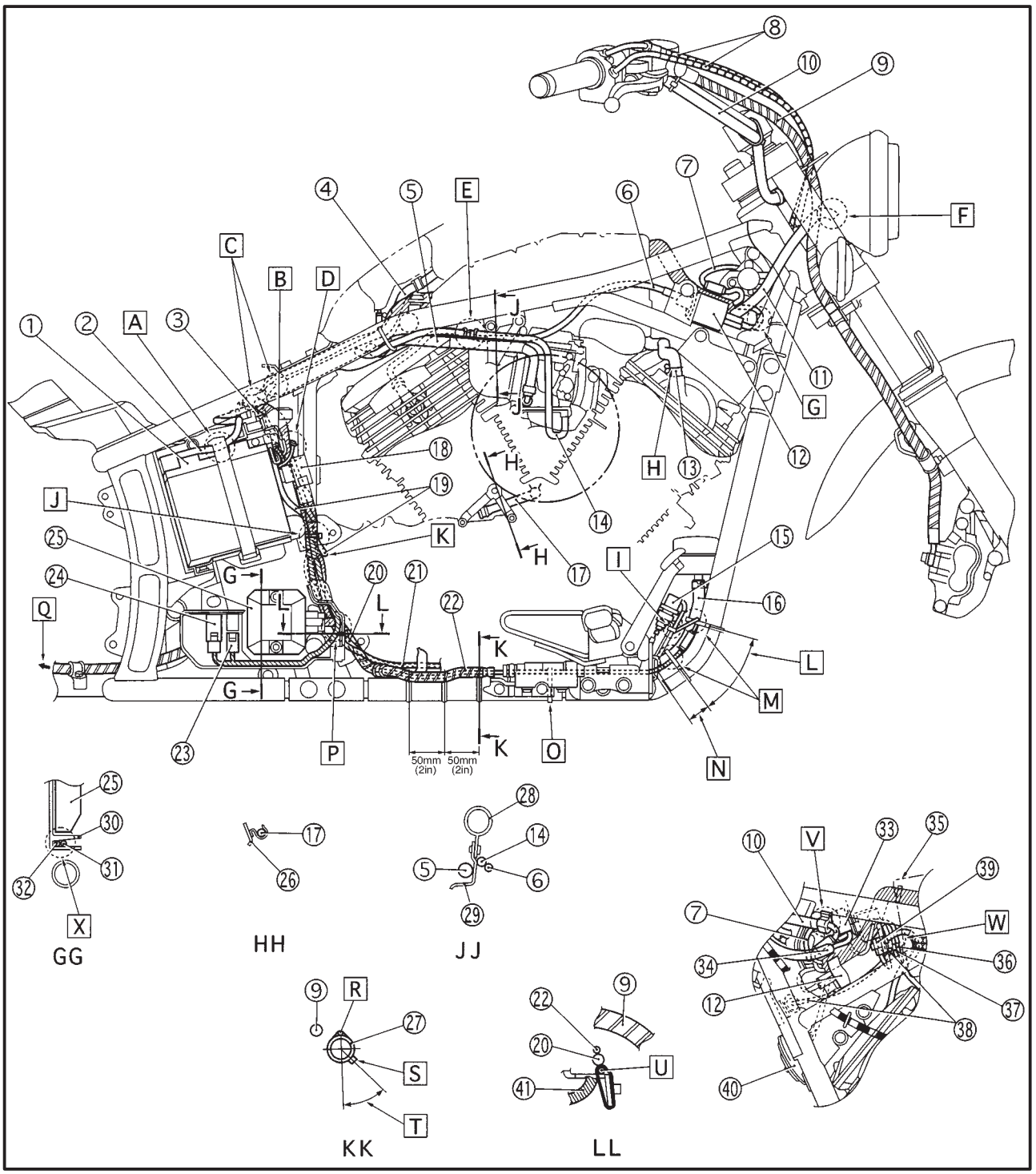

Q To rear brake.
R Fasten the rear brake switch lead with a band to down tube. (four point)
S Cutting part at the edge of the band.
T About 30° √ 45°
U Fasten the oil level sensor lead with a locking tie to battery box. Fix to the battery box with the band. To fix, algin the band to the bottom of the box's hole while fixing the lead to the back of the box (inside the body). The cutting part at the edge of the band comes to the front side of the body.
V Clamp the handlebar switch lead (right) to the frame with a holder. The part to open and shut is outside of the body.
W Arrange the throttle position sensor connector, carburetor heater connector and thermo switch connector between the starting circuit cut off relay and high tension code.
X Put the light reduce relay lead, carburetor heater lead into the bottom of the groove.

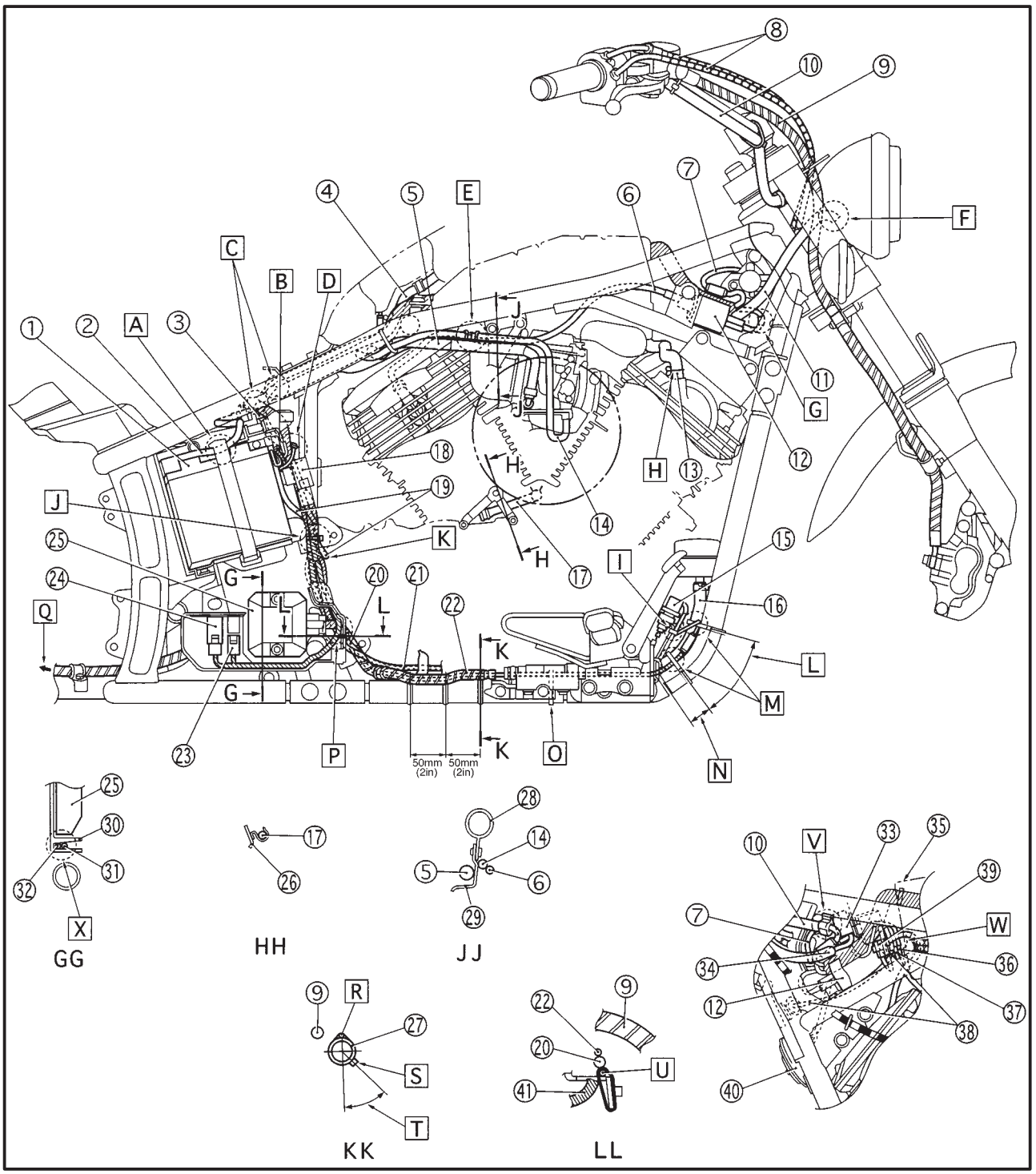

① Brake hose
② Throttle cable
③ Master cylinder reservoir hose
④ High tension code
⑤ Purge hose (carburetor-solenoid valve) (for CAL)
⑥ Rear brake switch lead
⑦ Fuel hose (carburetor-fuel pump)
⑧ Delay relay
⑨ Battery negative (–) lead
⑩ Battery negative (–) lead connector
⑪ Battery
⑫ Battery positive (+) lead
⑬ Taillight lead
⑭ Starter relay
⑮ Starter motor positive (+) lead
⑯ Fuel tank breather hose (fuel tank-roll over valve) (for CAL)
⑰ Outlet
⑱ Inlet
⑲ Ventilation hose
⑳ Starter cable
㉑ Sensing hose (AIS-carburetor joint)
㉒ Fuel hose (fuel cock-fuel filter)
㉓ Throttle position sensor lead
㉔ Carburetor heater lead
㉕ Tappet cover
㉖ Clutch cable
㉗ Thermo switch lead
㉘ Wireharness
㉙ Frame
㉚ Igniter unit
㉛ LID. 2
㉜ Mud guard
㉝ Fuel filter
㉞ LID.
㉟ Ignitor unit lead
㊱ Speed meter lead connecter

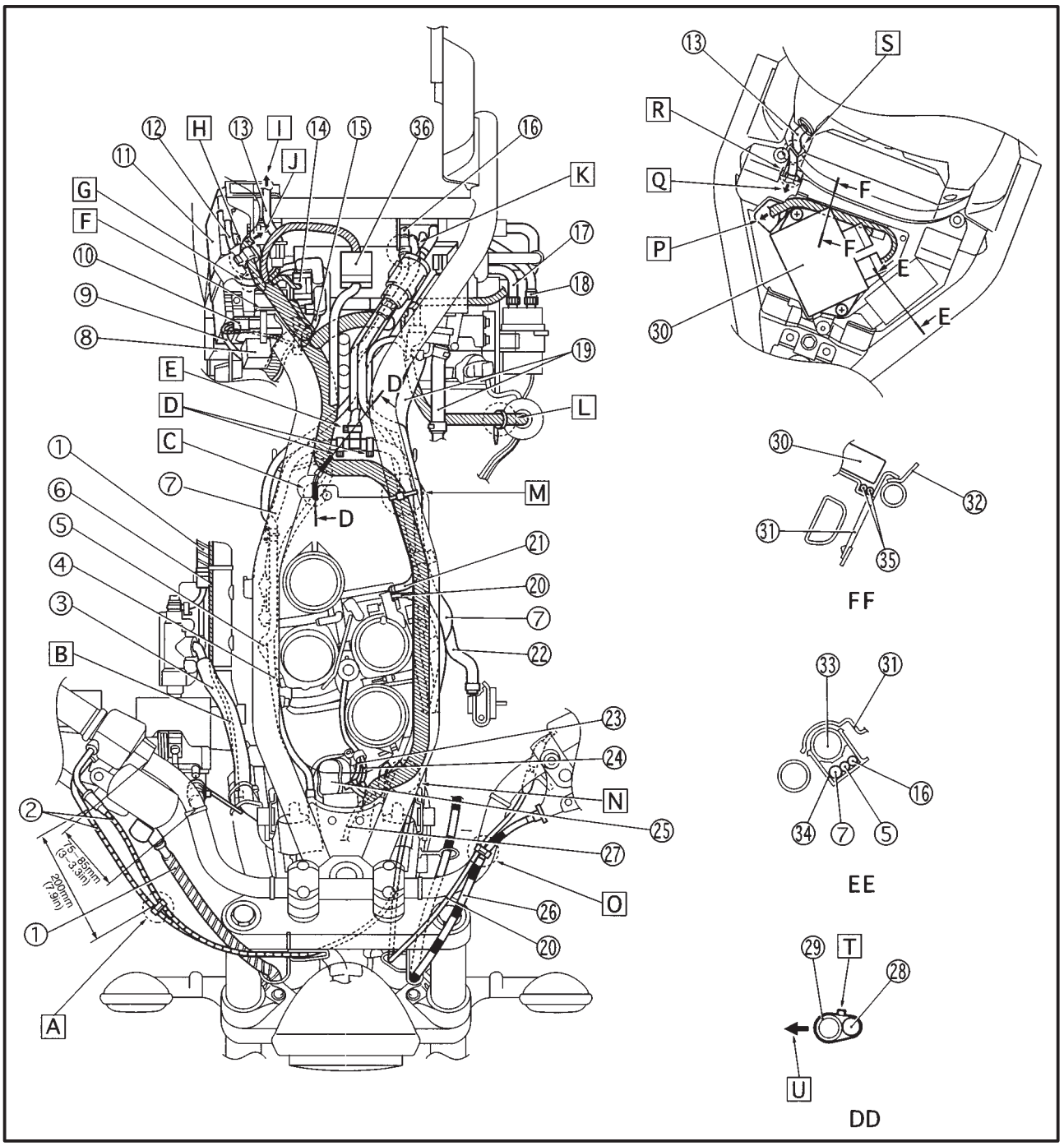

A Clamp the throttle cables with the holder. Position the end of clip downword.
B Route the rear brake switch lead under the master cylinder reservor hose.
C Position the band end of right side bracket.
D Position the steel band end to forward.
E Position the steel band end to right side.
F Eliminate the clamp.
G Route the battery positive (+) lead through the slit of the battery box.
H Clamp the igniter unit lead to the frame with a holder.
I To the rear fender.
J Connect the wireharness to the ignitar unit through the hole of LID. 2.
K Route the fuel tank breather hose under the fuel filter and connect it (fuel tank sideroll over valve side) with a joint. Position the end of clip outside.

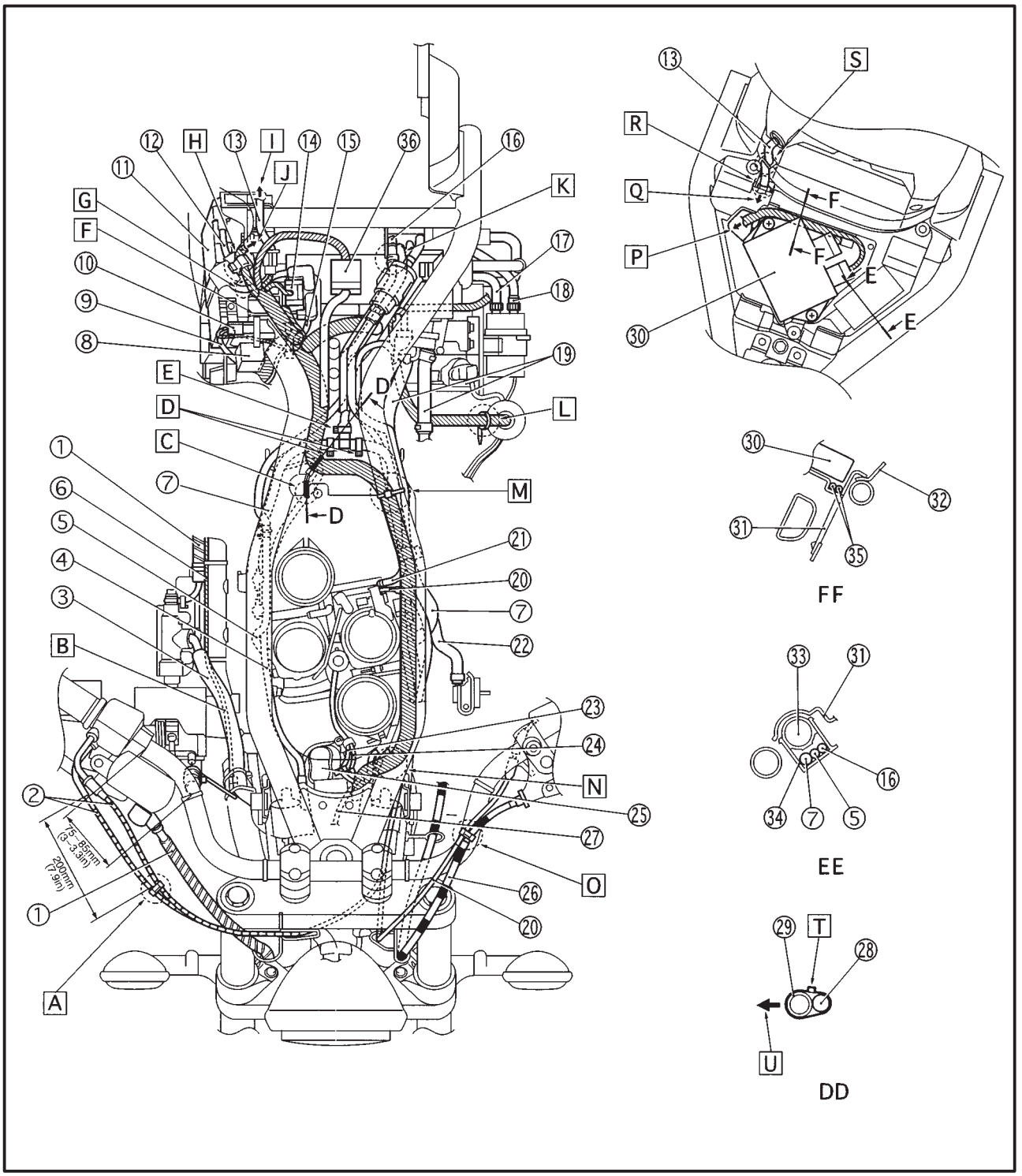

[L] Fasten the wireharness with a band on the tool box plate.
[M] Fasten the wireharness to the frame with a plastic locking tie. Position the locking tie front of the holder.
[N] Route the wireharness outside of the guide on the frame.
[O] Clamp the clutch cable and starter cable with a holder. Position the end of holder down side.
[P] Route the igniter lead through the igniter plate hole to the wireharness.
[Q] To the wireharness.
[R] Clamp the taillight lead with mud guard clamp.
[S] Clamp the taillight lead with a holder on the mud guard.
[T] Position the locking tie upward.
[U] The front direction of the level body.

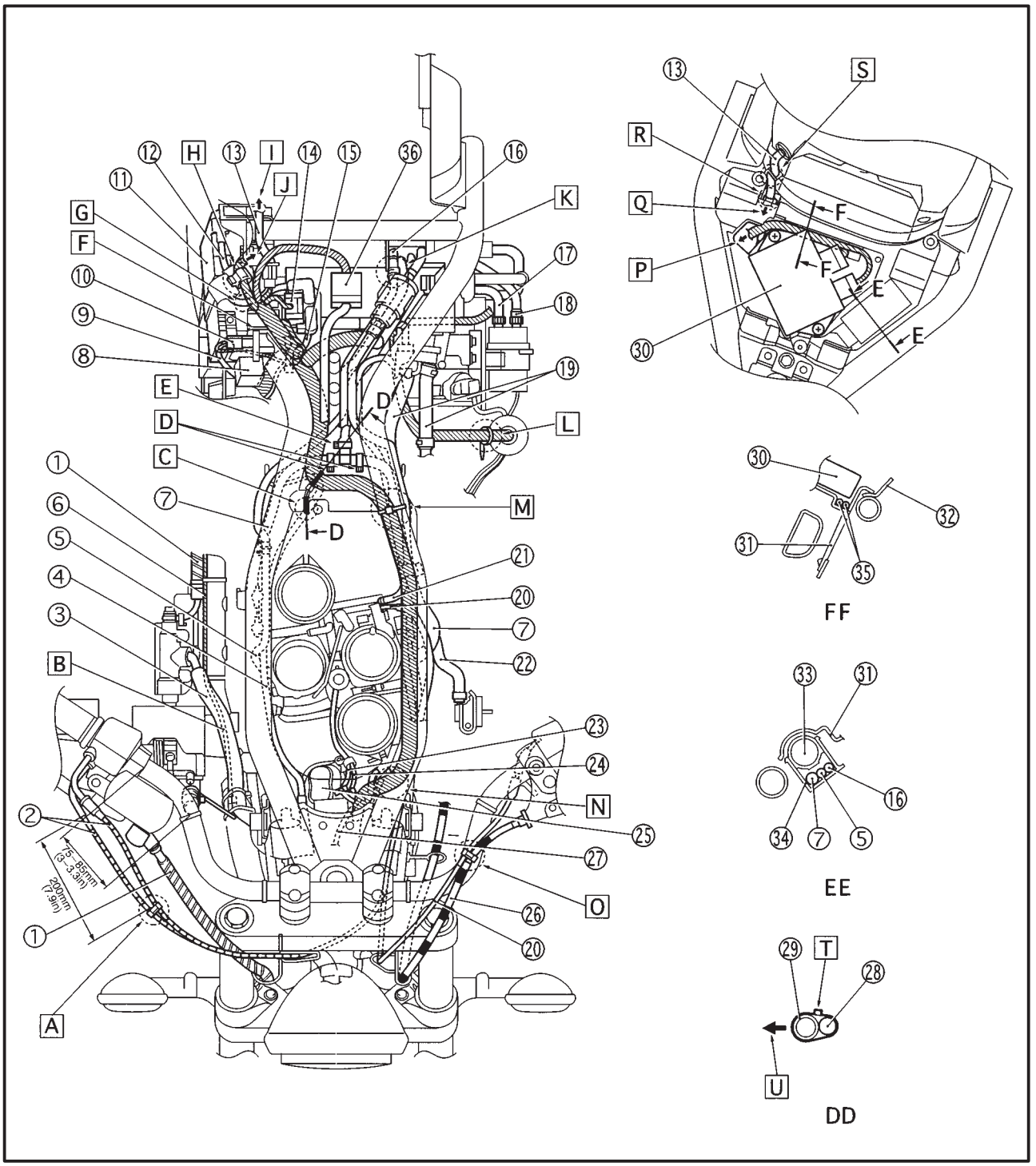

① Throttle cable
② Starter cable
③ Clutch cable
④ Handlebar switch lead (left)
⑤ Headlight lead
⑥ Brake hose
⑦ Handlebar switch lead (right)

A Route the handlebar switch lead (right) rear side of the throttle cable.

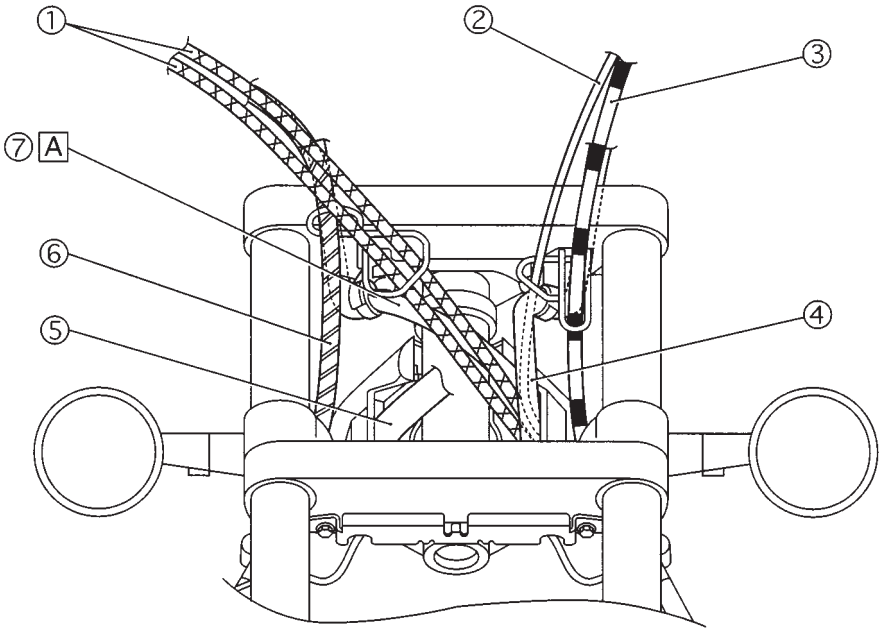

CHAPTER 3
PERIODIC CHECKS AND ADJUSTMENTS

INTRODUCTION 3-1

PERIODIC MAINTENANCE CHART FOR EMISSION CONTROL SYSTEM 3-1

GENERAL MAINTENANCE AND LUBRICATION CHART 3-1

FUEL TANK AND SEATS 3-3
- REMOVAL 3-4
- INSTALLATION 3-4

ENGINE 3-5
- ADJUSTING THE VALVE CLEARANCE 3-5
- SYNCHRONIZING THE CARBURETORS 3-8
- ADJUSTING THE ENGINE IDLING SPEED 3-10
- ADJUSTING THE THROTTLE CABLE FREE PLAY 3-11
- CHECKING THE SPARK PLUGS 3-12
- CHECKING THE IGNITION TIMING 3-13
- MEASURING THE COMPRESSION PRESSURE 3-14
- CHECKING THE ENGINE OIL LEVEL 3-16
- CHANGING THE ENGINE OIL 3-17
- ADJUSTING THE CLUTCH CABLE FREE PLAY 3-18
- CLEANING THE AIR FILTER ELEMENT 3-19
- CHECKING THE CARBURETOR JOINT AND INTAKE MANIFOLD 3-20
- CHECKING THE BREATHER HOSE 3-20
- CHECKING THE EXHAUST SYSTEM 3-21

CHASSIS 3-22
- ADJUSTING THE FRONT BRAKE 3-22
- ADJUSTING THE REAR BRAKE 3-23
- CHECKING THE BRAKE FLUID LEVEL 3-24
- ADJUSTING THE REAR BRAKE LIGHT SWITCH 3-25
- CHECKING THE BRAKE HOSES 3-25
- BLEEDING THE HYDRAULIC BRAKE SYSTEM 3-26
- ADJUSTING THE SHIFT PEDAL 3-27
- CHECKING THE FINAL DRIVE OIL LEVEL 3-28
- CHANGING THE FINAL DRIVE OIL 3-28
- CHECKING AND ADJUSTING THE STEERING HEAD 3-29
- CHECKING THE FRONT FORK 3-31
- ADJUSTING THE REAR SHOCK ABSORBER ASSEMBLY 3-31
- CHECKING THE TIRES 3-32
- CHECKING AND TIGHTENING THE SPOKES 3-35
- CHECKING AND LUBRICATING THE CABLES 3-36
- LUBRICATING THE LEVERS AND PEDALS 3-36
- LUBRICATING THE SIDESTAND 3-36
- LUBRICATING THE REAR SUSPENSION 3-36

ELECTRICAL SYSTEM 3-37
CHECKING AND CHARGING THE BATTERY 3-37
CHECKING THE FUSES 3-43
REPLACING THE HEADLIGHT BULB 3-44
ADJUSTING THE HEADLIGHT BEAM 3-45

EB300000

PERIODIC CHECKS AND ADJUSTMENTS

INTRODUCTION

This chapter includes all information necessary to perform recommended checks and adjustments. If followed, these preventive maintenance procedures will ensure more reliable vehicle operation, a longer service life and reduce the need for costly overhaul work. This information applies to vehicles already in service as well as to new vehicles that are being prepared for sale. All service technicians should be familiar with this entire chapter.

EB301000

PERIODIC MAINTENANCE CHART FOR EMISSION CONTROL SYSTEM

No.		ITEM	REMARKS	INITIAL	ODOMETER READINGS				
				600 mi (1,000 km) or 1 month	4,000 mi (7,000 km) or 6 months	8,000 mi (13,000 km) or 12 months	12,000 mi (19,000 km) or 18 months	16,000 mi (25,000 km) or 24 months	20,000 mi (31,000 km) or 30 months
1	*	Valve clearance	° Check and adjust valve clearance when engine is cold.	√	√	√	√	√	√
2		Spark plugs	° Check condition. ° Adjust gap and clean. ° Replace at 8,000 mi (13,000 km) or 12 months and thereafter every 8,000 mi (12,000 km) or 12 months.		√	Replace	√	Replace	√
3	*	Crankcase ventilation system	° Check ventilation hose for cracks or damage. ° Replace if necessary.		√	√	√	√	√
4	*	Fuel line	° Check fuel hose for cracks or damage. ° Replace if necessary.		√	√	√	√	√
5	*	Fuel filter	° Replace initial 20,000 mi (31,000 km) and thereafter every 20,000 mi (30,000 km).						
6	*	Exhaust system	° Check for leakage. ° Retighten if necessary. ° Replace gasket(s) if necessary.		√	√	√	√	√
7	*	Carburetor synchronization	° Adjust synchronization of carburetors.	√	√	√	√	√	√
8	*	Idle speed	° Check and adjust engine idle speed. ° Adjust throttle cable free play.		√	√	√	√	√
9	*	Evaporative emission control system**	° Check control system for damage. ° Replace if necessary.				√		√

* Since these items require special tools, data and technical skills, they should be serviced by a Yamaha dealer.

** California only.

GENERAL MAINTENANCE AND LUBRICATION CHART

No.		ITEM	REMARKS	INITIAL	ODOMETER READINGS				
				600 mi (1,000 km) or 1 month	4,000 mi (7,000 km) or 7 months	8,000 mi (13,000 km) or 13 months	12,000 mi (19,000 km) or 19 months	16,000 mi (25,000 km) or 25 months	20,000 mi (31,000 km) or 31 months
1		Engine oil	° Replace. Warm engine before draining.	√	√	√	√	√	√
2	*	Engine oil filter	° Replace.	√		√		√	
3		Air filter	° Clean. ° Clean or replace if necessary.		√	√	√	√	√
4	*	Brake system	° Check operaiton, fluid level, and fluid leakage. ° Correct accordingly. Replace pads if necessary.	√	√	√	√	√	√
5	*	Clutch	° Check operation. ° Adjust or replace cable.	√	√	√	√	√	√

No.		ITEM	REMARKS	INITIAL	ODOMETER READINGS				
				600 mi (1,000 km) or 1 month	4,000 mi (7,000 km) or 7 months	8,000 mi (13,000 km) or 13 months	12,000 mi (19,000 km) or 19 months	16,000 mi (25,000 km) or 25 months	20,000 mi (31,000 km) or 31 months
6	*	**Final gear oil**	° Check oil level and leakage. ° Replace at initial 600 mi (1,000 km) or 1 month and thereafter every 16,000 mi (24,000 km) or 24 months. ° SAE 80 API "GL-4" hypoid gear oil.	Replace		Check		√	
7	*	**Control and meter cable**	° Apply chain lube thoroughly. ° Yamaha chain and cable lube or SAE 10W-30 motor oil.	√	√	√	√	√	√
8	*	**Swing arm pivot bearing**	° Check swing arm pivot for play. ° Correct if necessary. ° Moderately repack every 16,000 mi (24,000 km) or 24 months. ° Lithium soap base grease.					Repack	
9		**Brake / Clutch lever pivot shaft**	° Apply chain lube thoroughly. ° Yamaha chain and cable lube or SAE 10W-30 motor oil		√	√	√	√	√
10		**Brake pedal and shift pedal shaft**	° Apply chain lube thoroughly. ° Yamaha chain and cable lube or SAE 10W-30 motor oil.		√	√	√	√	√
11		**Side-stand pivots**	° Check operation. ° Lubricate and repair if necessary. ° Yamaha chain and cable lube or SAE 10W-30 motor oil.		√	√	√	√	√
12	*	**Front fork**	° Check operation and for oil leakage. ° Correct accordingly.		√	√	√	√	√
13	*	**Steering bearings**	° Check bearing play and steering for smooth operation. ° Correct if necessary. ° Moderately repack every 16,000 mi (24,000 km) or 24 months. ° Lithium soap base grease.		√	√	√	Repack	√
14	*	**Wheel bearings**	° Check bearings for looseness and damage. ° Replacer if necessary.		√	√	√	√	√
15	*	**Wheels**	° Check balance, runout, spoke tightness and for damage. ° Tighten spokes and rebalance or replace if necessary.		√	√	√	√	√
16	*	**Sidestand switch**	° Check operation. ° Replace if necessary.	√	√	√	√	√	√
17	*	**Tires**	° Check tire tread wear and for damage. ° Replace if necessary.						
18	*	**Rear shock absorber**	° Check operation and for oil leakage. ° Replace if necessary.						
19	*	**Chassis fasteners**	° Check all nuts, bolts, and screws for tighteness. ° Tighten if necessary.						

* Since these items require special tools, data and technical skills, they should be serviced by a Yamaha dealer.

NOTE:

For odometer readings or time periods higher than 20,000 mi (31,000 km) or 31 months, repeat the same maintenance as listed in the chart from the 4,000 mi (7,000 km) or 7 month interval.

EAU00477

NOTE:

°The air filter needs more frequent service if you are riding in unusually wet or dusty areas.

°Brake fluid replacement.

1. When disassembling the master cylinder or caliper cylinder, always replace the brake fluid. Check the brake fluid level regularly and fill as required.
2. Replace the oil seals on the inner parts of the master cylinder and caliper cylinder every two years.
3. Replace the brake hoses every four years or if cracked or damaged.

FUEL TANK AND SEATS

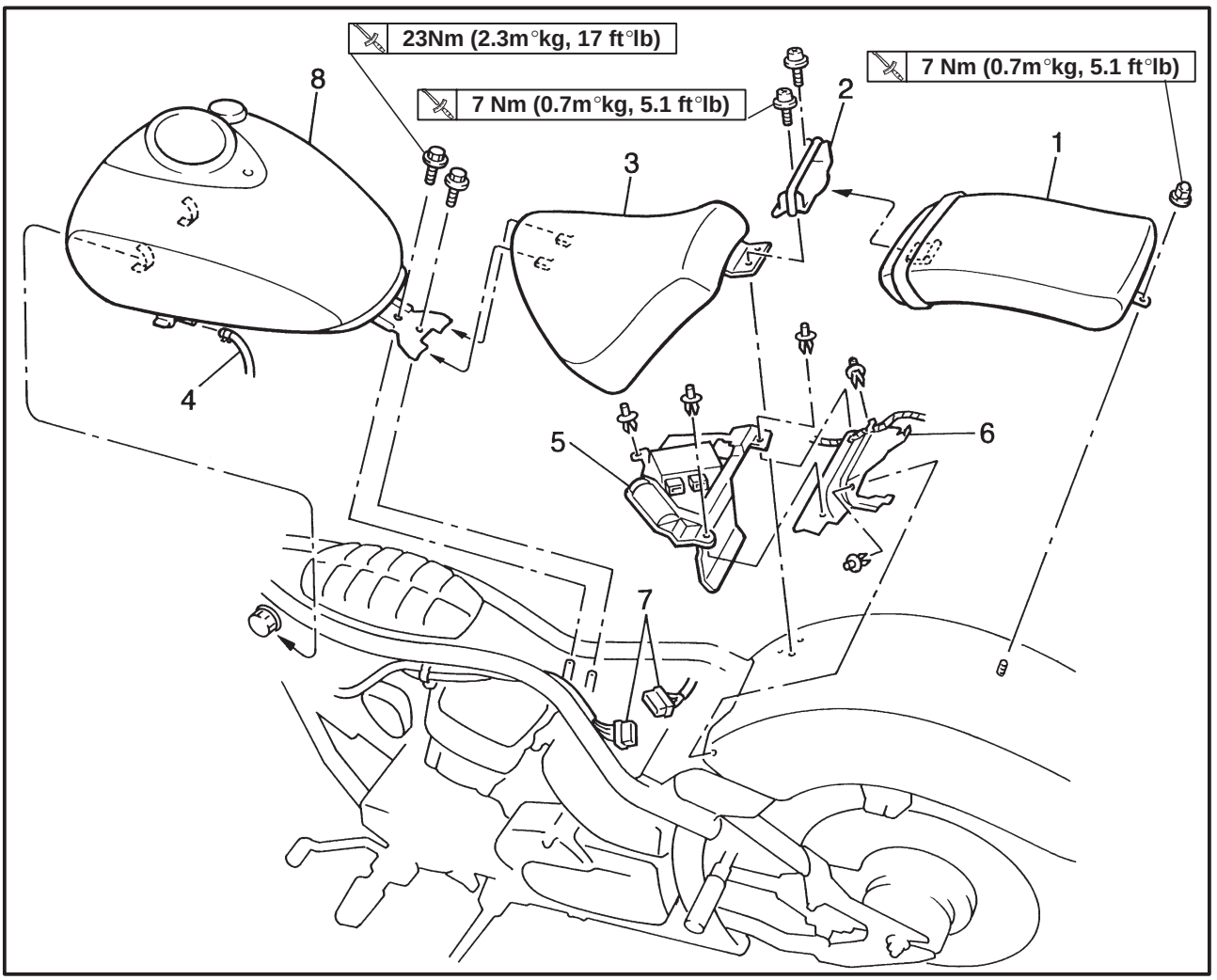

Order	Job name/Part name	Q'ty	Remarks
	Fuel tank and seats removal		Remove the parts in the order below.
1	Passenger seat	1	
2	Seat bracket	1	
3	Rider's seat	1	
4	Fuel hose	1	**NOTE:** Set the fuel cock to "OFF" before disconnecting the fuel hose.
5	Ignitor plate	1	
6	Mud guard	1	
7	Meter lead couper	1	
8	Fuel tank assembly	1	For installation, reverse the removal procedure.

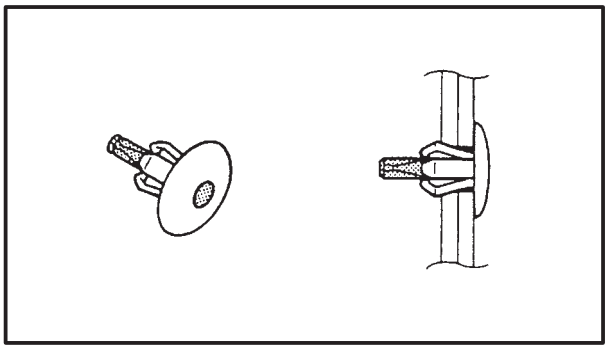

REMOVAL

1. Remove:
   - Ignitor plate

NOTE:

To remove the quick fastener, push its center in with a screwdriver, then pull the fastener out.

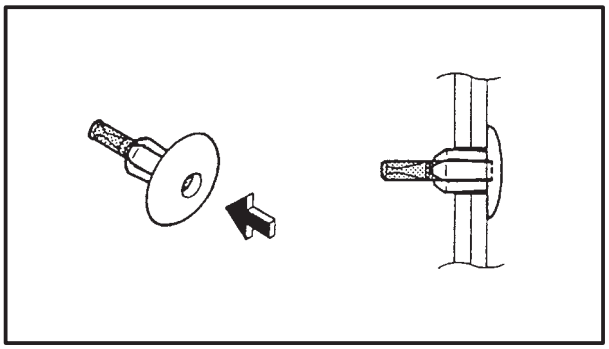

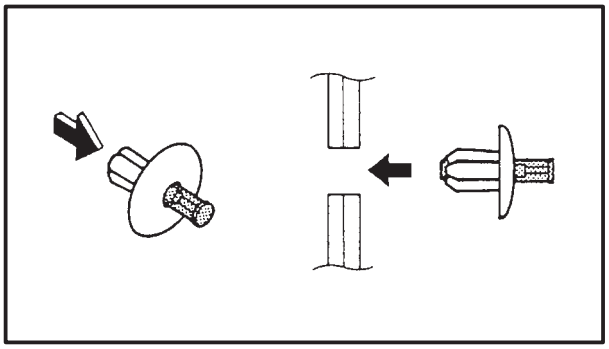

INSTALLATION

1. Install:
   - Ignitor plate

NOTE:

To install the quick fastener, push its pin so that it protrudes from the fastener head, then insert the fastener into the cowling and push the pin ⓐ in with a screwdriver. Make sure that the pin is flush with the fastener's head.

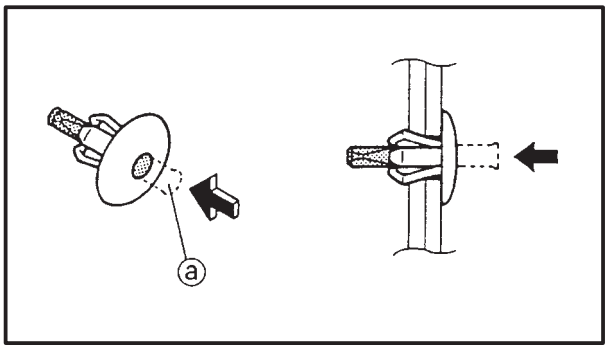

EAS00047

ENGINE

ADJUSTING THE VALVE CLEARANCE

The following procedure applies to all of the valves.

NOTE:

- Valve clearance adjustment should be made on a cold engine, at room temperature.
- When the valve clearance is to be measured or adjusted, the piston must be at top dead center (TDC) on the compression stroke.

1. Remove:
   - rider's seat
   - fuel tank

   Refer to "FUEL TANK AND SEATS".
2. Disconnect:
   - spark plug caps
3. Remove:
   - spark plugs

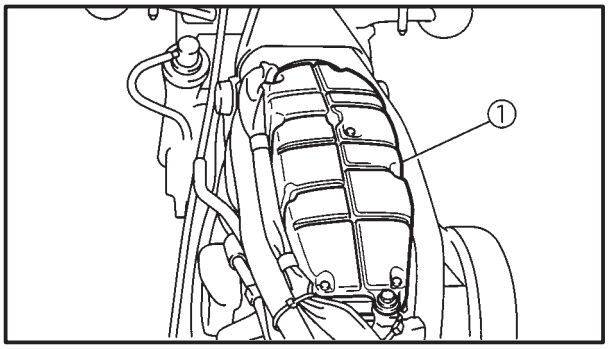

4. Remove:
   - air intake box ①

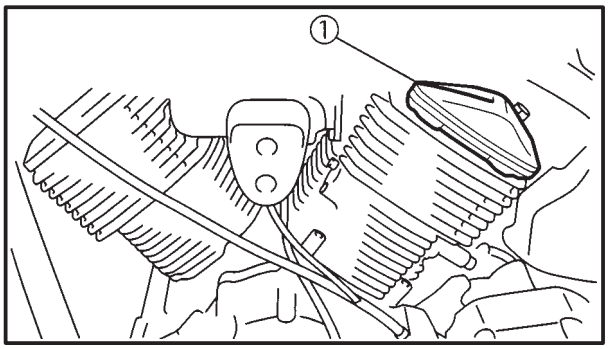

5. Remove:
   - cylinder head cover (rear cylinder) ①
   - cylinder head cover (front cylinder)

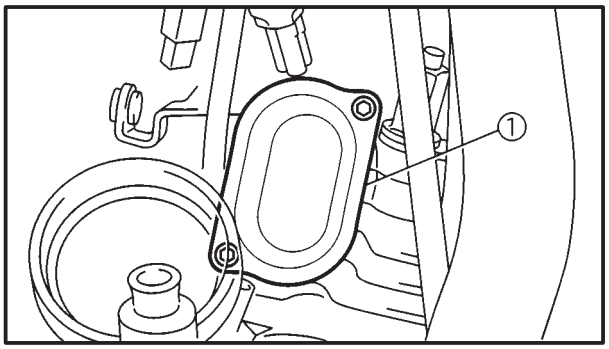

6. Remove:
   - tappet covers ①

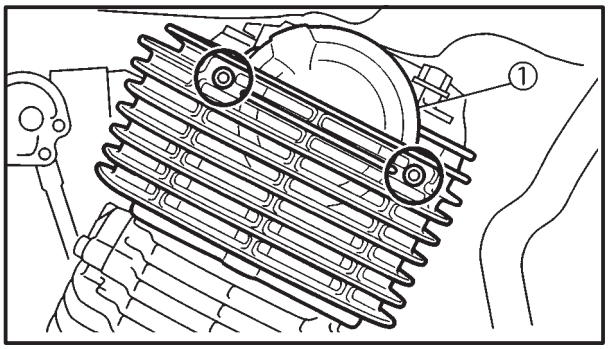

7. Remove:
   - camshaft sprocket cover (rear cylinder) ①
   - camshaft sprocket cover (front cylinder)

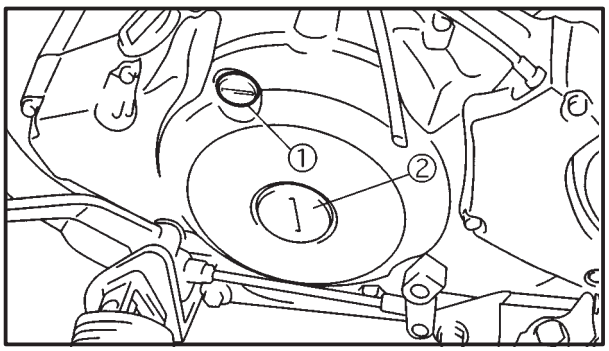

8. Remove:
   - timing plug ①
   - straight plug ②

9. Measure:
   - valve clearance
     Out of specification → Adjust.

Valve clearance (cold):
Intake valve:
0.07 ~ 0.12 mm
(0.0028 ~ 0.0047 in)
Exhaust valve:
0.12 ~ 0.17 mm
(0.0028 ~ 0.0047 in)

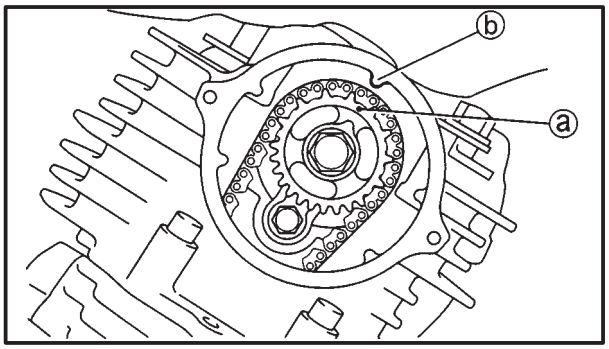

a. Turn the crankshaft clockwise.
b. When the piston is at TDC on the compression stroke, align either the camshaft sprocket plate hole ⓐ with the stationary pointer ⓑ on the cylinder head. When the camshaft sprocket plate hole or camshaft sprocket punch mark is aligned with the stationary pointer, the piston is at top dead center (TDC).
c. Align the TDC mark ⓒ on the generator rotor with the stationary pointer ⓓ on the crankcase.

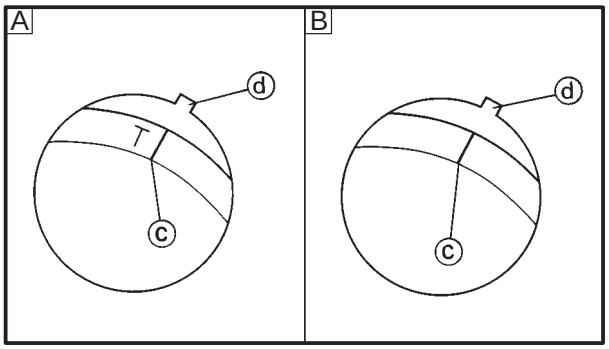

A Rear cylinder ("TI" mark)
B Front cylinder ("I" mark)

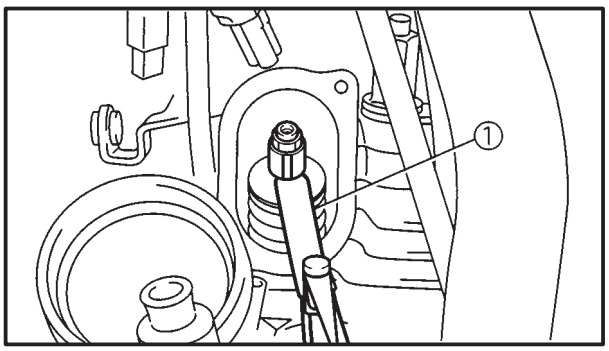

d. Measure the valve clearance with a thickness gauge ①.
e. Turn the crankshaft crockwise 290°, and then measure the front cylinder.

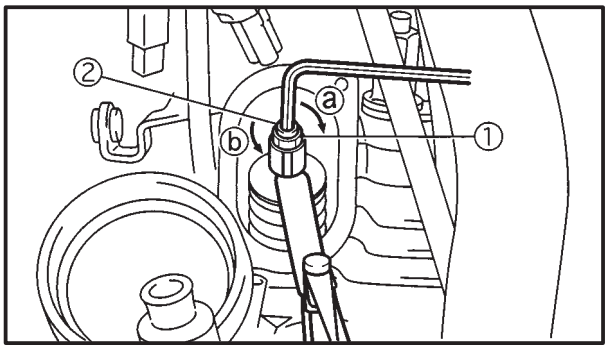

10. Adjust
°valve clearance

a. Loosen the locknut ①.
b. Insert a thickness gauge between the end of the adjusting screw and the valve tip.
c. Turn the adjusting screw ② in direction ⓐ or ⓑ until the specified valve clearance is obtained.

Direction ⓐ	**Valve clearance is decreased.**
Direction ⓑ	**Valve clearance is increased.**

d. Hold the adjusting screw to prevent it from moving and tighten the locknut to specification.

	Locknut: **27 Nm (2.7 m°kg, 20 ft°lb)**

e. Measure the valve clearance again.
f. If the valve clearance is still out of specification, repeat all of the valve clearance adjustment steps until the specified clearance is obtained.

▲▲▲▲▲▲▲▲▲▲▲▲▲▲▲▲▲▲▲▲▲▲▲▲▲▲▲▲▲▲▲▲

11. Install:
   °all removed parts

NOTE:

Install all removed parts in the reverse order of their disassembly. Note the following points.

   °camshaft sprocket covers

	10 Nm (1.0 m°kg, 7.2 ft°lb)

   °tappet covers

	10 Nm (1.0 m°kg, 7.2 ft°lb)

   °spark plugs

	20 Nm (2.0 m°kg, 14 ft°lb)

EAS00051

SYNCHRONIZING THE CARBURETORS

NOTE:

Prior to synchronizing the carburetors, the valve clearance and the engine idling speed should be properly adjusted and the ignition timing should be checked.

1. Stand the motorcycle on a level surface.

NOTE:

Place the motorcycle on a suitable stand.

2. Remove:
   °rider's seat
   °fuel tank
   Refer to "FUEL TANK AND SEATS".
3. Remove:
   °air duct ①

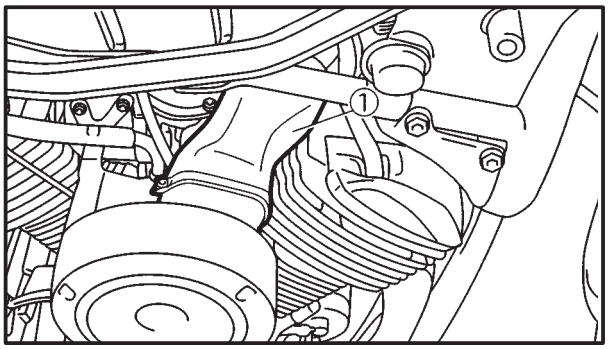

4. Remove:
   °vacuum plugs ①

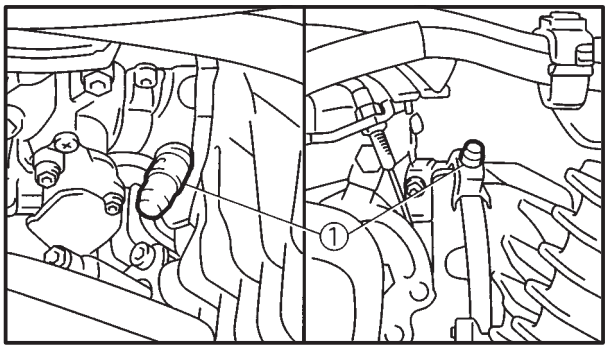

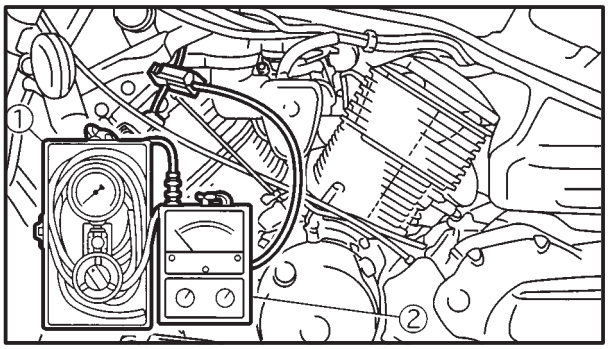

5. Install:
   - vacuum gauge ①
   - engine tachometer ②
     (to the spark plug lead of cyl. #2)

Vacuum gauge:
YU-08030-A, 90890-03094
Engine tachometer:
YU-08036-A, 90890-03113

6. Start the engine and let it warm up for several minutes.
7. Check:
   - engine idling speed
     Out of specification → Adjust.
     Refer to "ADJUSTING THE ENGINE IDLING SPEED".

Engine idling speed:
950 √ 1,050 r/min

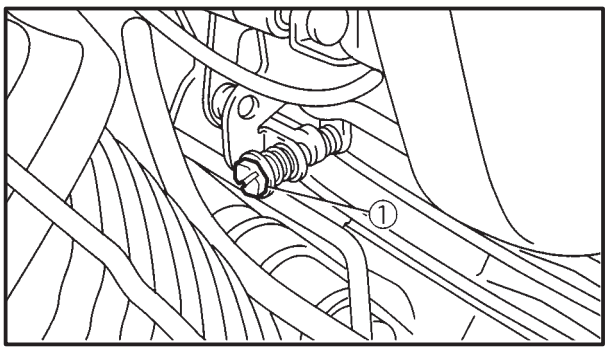

8. Adjust:
   - Carburetor synchronization

▼▼▼▼▼▼▼▼▼▼▼▼▼▼▼▼▼▼▼▼▼▼▼▼▼▼▼▼▼▼▼▼

a. Synchronize carburetor #1 to carburetor #2 by turning the synchronizing screw ① in either direction until both gauges read the same.
b. Rev the engine two or three times, each time for less than a second, and check the synchronization again.

Vacuum pressure at idle speed:
34.7 √ 37.3 kPa (260 √ 280 mmHg)

NOTE:

The difference between the two carburetors should not exceed 1.33 kPa (10 mmHg).

▲▲▲▲▲▲▲▲▲▲▲▲▲▲▲▲▲▲▲▲▲▲▲▲▲▲▲▲▲▲▲▲

9. Check:
   - engine idling speed
     Out of specification → Adjust.
10. Stop the engine and remove the measuring equipment.
11. Adjust:
    - throttle cable free play
      Refer to "ADJUSTING THE THROTTLE CABLE FREE PLAY".

	Throttle cable free play (at the flange of the throttle grip) **4 √ 6 mm (0.16 √ 0.24 in)**

12. Install:
    - vacuum plugs
    - air duct
    - fuel tank
    - seat

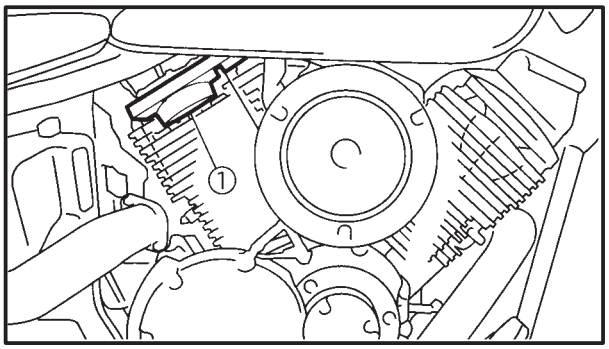

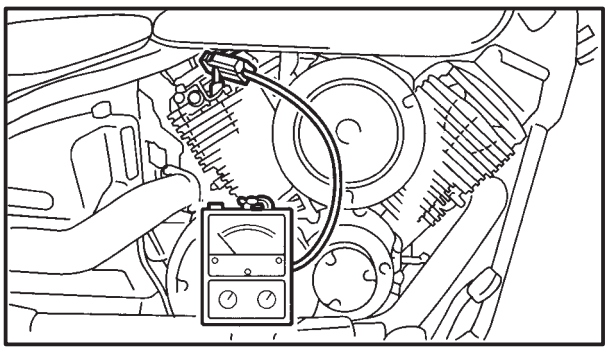

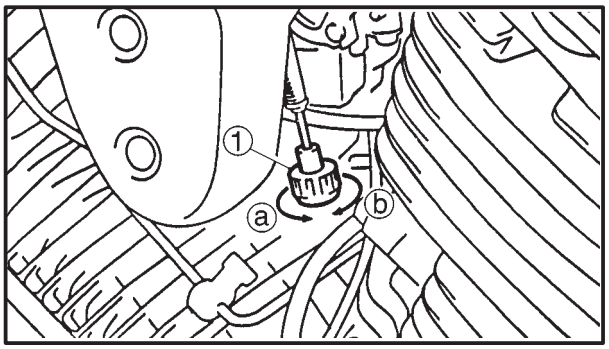

EAS00054

ADJUSTING THE ENGINE IDLING SPEED

NOTE:

Prior to adjusting the engine idling speed, the carburetor synchronization should be adjusted properly, the air filter should be clean, and the engine should have adequate compression.

1. Start the engine and let it warm up for several minutes.
2. Remove:
   - cylinder head cover ①
3. Install:
   - engine tachometer
     (to the spark plug lead of cyl. #1)

	Engine tachometer: **YU-08036-A, 90890-03113**

4. Check:
   - engine idling speed
     Out of specification → Adjust.

	Engine idling speed: **950 √ 1,050 r/min**

5. Adjust:
   - engine idling speed

▼▼▼

6. Adjust:
   - throttle cable free play
     Refer to “ADJUSTING THE THROTTLE CABLE FREE PLAY”.

	Throttle cable free play (at the flange of the throttle grip) **4 √ 6 mm (0.16 √ 0.24 in)**

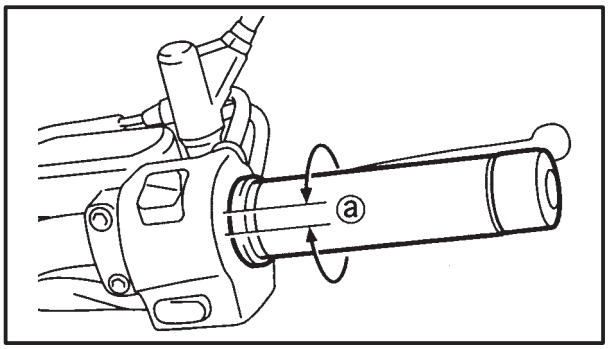

EAS00058

ADJUSTING THE THROTTLE CABLE FREE PLAY

NOTE:

Prior to adjusting the throttle cable free play, the engine idling speed should be adjusted.

1. Check:
   - throttle cable free play ⓐ
     Out of specification → Adjust.

	Throttle cable free play (at the flange of the throttle grip) **4 √ 6 mm (0.16 √ 0.24 in)**

2. Remove:
   - rider’s seat
   - fuel tank
     Refer to “FUEL TANK AND SEATS”.
3. Adjust:
   - throttle cable free play

▼▼▼▼▼▼▼▼▼▼▼▼▼▼▼▼▼▼▼▼▼▼▼▼▼▼▼▼▼▼▼▼▼▼

NOTE:

When the motorcycle is accelerating, the accelerator cable ① is pulled.

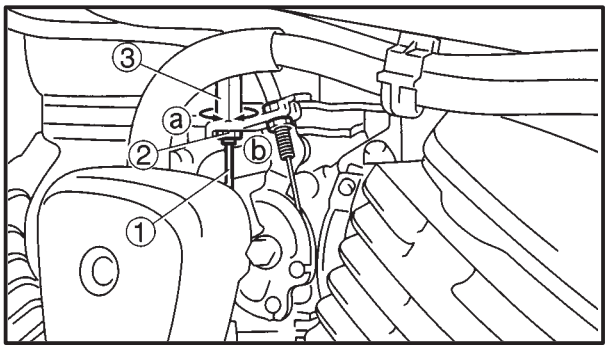

Carburetor side

a. Loosen the locknut ② on the accelerator cable.
b. Turn the adjusting nut ③ in direction ⓐ or ⓑ until the specified throttle cable free play is obtained.

Direction ⓐ	**Throttle cable free play is decreased.**
Direction ⓑ	**Throttle cable free play is increased.**

c. Tighten the locknuts.

NOTE:

If the specified throttle cable free play cannot be obtained on the carburetor side of the cable, use the adjusting nut on the handlebar side.

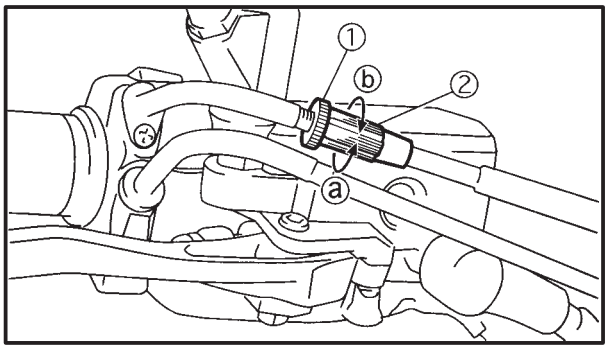

Handlebar side

a. Loosen the locknut ①.
b. Turn the adjusting nut ② in direction ⓐ or ⓑ until the specified throttle cable free play is obtained.

Direction ⓐ	**Throttle cable free play is increased.**
Direction ⓑ	**Throttle cable free play is decreased.**

c. Tighten the locknut.

⚠ WARNING

After adjusting the throttle cable free play, turn the handlebar to the right and to the left to ensure that this does not cause the engine idling speed to change.

▲▲▲▲▲▲▲▲▲▲▲▲▲▲▲▲▲▲▲▲▲▲▲▲▲▲▲▲▲▲▲▲

EAS00059

CHECKING THE SPARK PLUGS

The following procedure applies to all of the spark plugs.

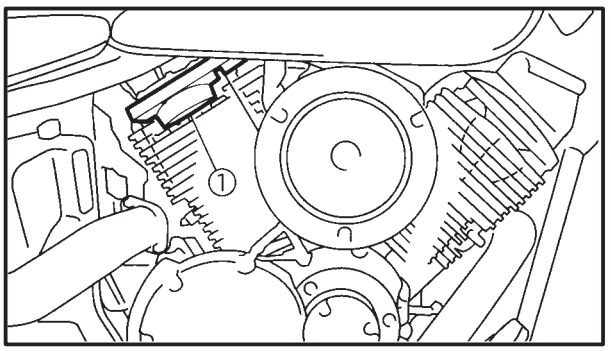

1. Remove:
   ° cylinder head covers ①
2. Disconnect:
   ° spark plug cap
3. Remove:
   ° spark plug

CAUTION:

Before removing the spark plugs, blow away any dirt accumulated in the spark plug wells with compressed air to prevent it from falling into the cylinders.

4. Check:
   ° spark plug type
   Incorrect → Change.

Spark plug type (manufacturer)
BPR7ES (NGK)
W22EPR-U (DENSO)

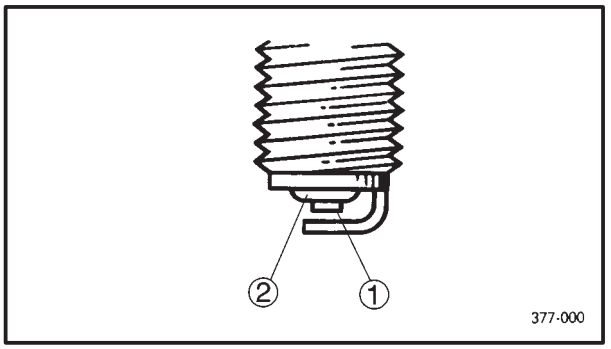

5. Check:
   ° electrode ①
   Damage/wear → Replace the spark plug.
   ° insulator ②
   Abnormal color → Replace the spark plug.
   Normal color is a medium-to-light tan color.
6. Clean:
   ° spark plug
   (with a spark plug cleaner or wire brush)

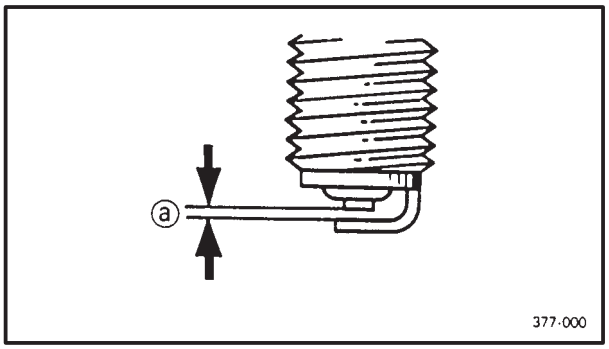

7. Measure:
   °spark plug gap ⓐ
   (with a wire gauge)
   Out of specification → Regap.

Spark plug gap
0.7 √ 0.8 mm
(0.0028 √ 0.031 in)

8. Install:
   °spark plug — **20 Nm (2.0 m°kg, 14 ft°lb)**

NOTE:
Before installing the spark plug, clean the spark plug and gasket surface.

9. Connect:
   °spark plug cap

EAS00064

CHECKING THE IGNITION TIMING

NOTE:
Prior to checking the ignition timing, check the wiring connections of the entire ignition system. Make sure that all connections are tight and free of corrosion.

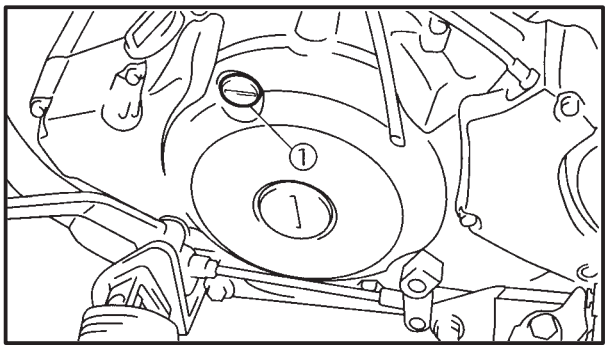

1. Remove:
   °timing plug ①

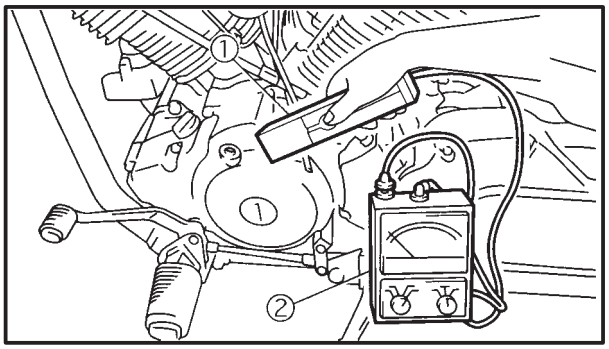

2. Install:
   °timing light ①
   °engine tachometer ②
   (to the spark plug lead of cyl. #1)

Timing light:
YU-33277-A, 90890-03141
Engine tachometer:
YU-08036-A, 90890-03113

3. Check:
   °ignition timing

▼▼▼▼▼▼▼▼▼▼▼▼▼▼▼▼▼▼▼▼▼▼▼▼▼▼▼▼▼▼▼▼▼▼

a. Start the engine, warm it up for several minutes, and then let it run at the specified engine idling speed.

	Engine idling speed: **950 √ 1,050 r/min**

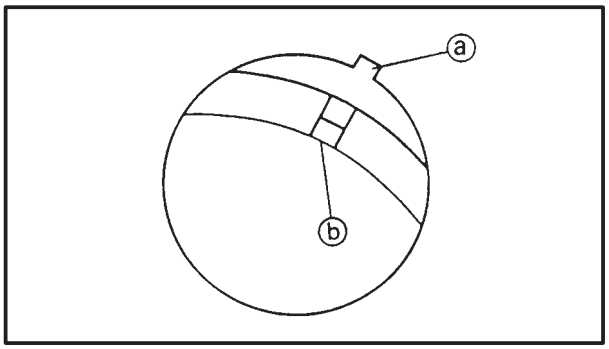

b. Check that the stationary pointer ⓐ is within the firing range ⓑ on the generator rotor.
   Incorrect firing range → Check the ignition system.

NOTE:

The ignition timing is not adjustable.

▲▲▲▲▲▲▲▲▲▲▲▲▲▲▲▲▲▲▲▲▲▲▲▲▲▲▲▲▲▲▲▲▲▲

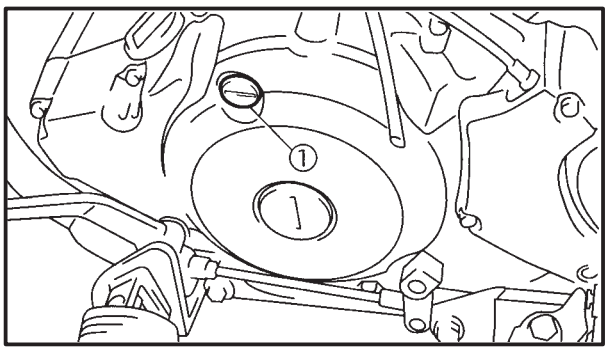

4. Install:
   °timing plug ①

EAS00065

MEASURING THE COMPRESSION PRESSURE

The following procedure applies to all of the cylinders.

NOTE:

Insufficient compression pressure will result in a loss of performance.

1. Check:
   °valve clearance
   Out of specification → Adjust.
   Refer to “ADJUSTING THE VALVE CLEARANCE”.
2. Start the engine, warm it up for several minutes, and then turn it off.
3. Disconnect:
   °spark plug cap
4. Remove:
   °spark plug

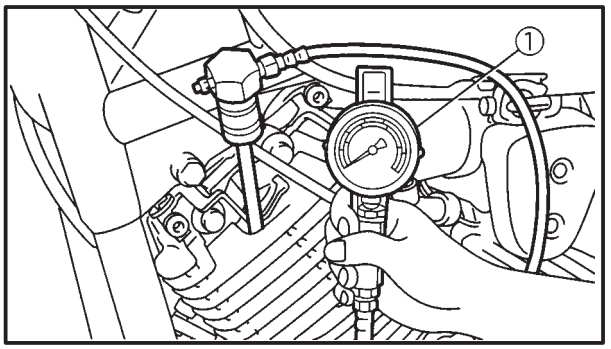

CAUTION:

Before removing the spark plugs, use compressed air to blow away any dirt accumulated in the spark plug wells to prevent it from falling into the cylinders.

5. Install:
   - compression gauge ①

	Compression gauge set: YU-33223, 90890-03081

6. Measure:
   - compression pressure
     Above the maximum pressure → Inspect the cylinder head, valve surfaces, and piston crown for carbon deposits.
     Below the minimum pressure → Squirt a few drops of oil into the affected cylinder and measure again.
   - Refer to the following table.

Compression pressure (with oil applied in the cylinder)	
Reading	**Diagnosis**
Higher than without oil	**Piston wear or damage → Repair.**
Same as without oil	**Piston ring(-s), valves, cylinder head gasket or piston possibly defective → Repair.**

Compression pressure (at sea level)
Standard:
1,000 kP (10 kg/cm^2, 142 psi)
Minimum:
900 kPa (9 kg/cm^2, 128 psi)
Maximum:
1,100 kPa (11 kg/cm^2, 156 psi)

a. Turn the main switch to “ON”.
b. With the throttle wide open, crank the engine until the reading on the compression gauge stabilized.

WARNING

To prevent sparking, ground all spark plug leads before cranking the engine.

NOTE:

The difference in compression pressure between cylinders should not exceed 100 kPa (1 kg/cm^2, 14 psi).

7. Install:
   °spark plug — 20 Nm (2.0 m°kg, 14 ft°lb)
8. Connect:
   °spark plug cap

EAS00069

CHECKING THE ENGINE OIL LEVEL

1. Stand the motorcycle on a level surface.

NOTE:

°Place the motorcycle on a suitable stand.
°Make sure that the motorcycle is upright.

2. Let the engine idle for a few minutes.

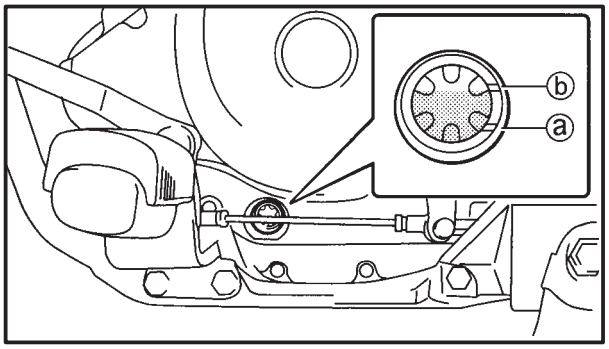

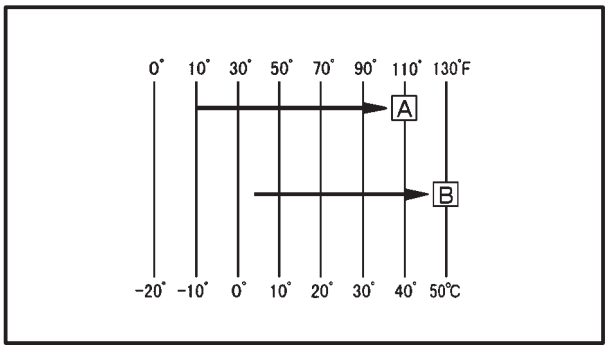

3. Check:
   °engine oil level
   The engine oil level should be between the minimum level marks ⓐ and maximum level marks ⓑ.
   Below the minimum level mark → Add the recommended engine oil to the proper level.

Recommended oil:
At –10°C (10°F) or higher A:
Yamalube 4 (10W–30) or SAE 10W–30 type SE motor oil
At 5°C (40°F) or higher B:
Yamalube 4 (20W–40) or SAE 20W–40 type SE motor oil

CAUTION:

°**Engine oil also lubricates the clutch and the wrong oil types or additives could cause clutch slippage. Therefore, do not add any chemical additives.**
°**Do not allow foreign materials to enter the crankcase.**

NOTE:

API Service “SE”, “SF” and “SG” type or equivalent (e.g., “SF-SE”, “SF-SE-CC”, “SF-SE-SD”)

4. Start the engine, warm it up for several minutes, and then turn it off.
5. Check the engine oil level again.

NOTE:

Before checking the engine oil level, wait a few minutes until the oil has settled.

EAS00075

CHANGING THE ENGINE OIL

1. Start the engine, warm it up for several minutes, and then turn it off.
2. Place a container under the engine oil drain bolt.
3. Remove:
   - engine oil filler cap ①
   - o-ring
   - engine oil drain bolt ②
   - gasket
4. Drain:
   - engine oil
     (completely from the crankcase)
5. If the oil filter element is also to be replaced, perform the following procedure.

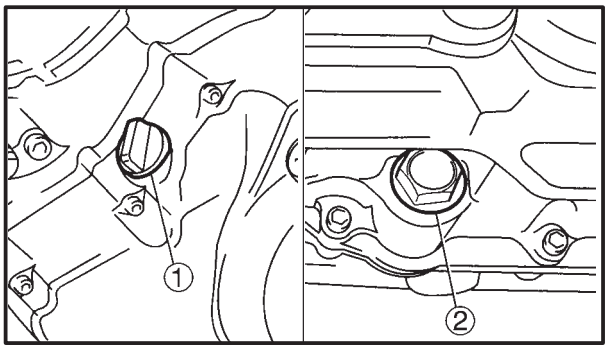

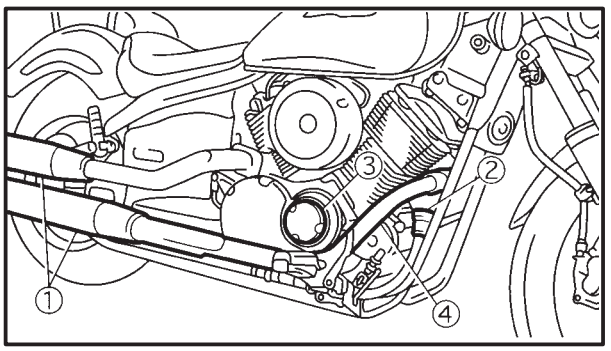

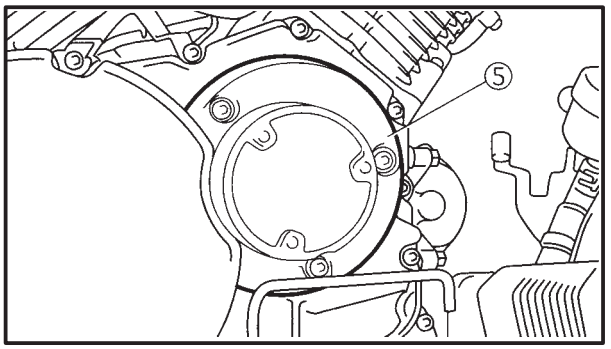

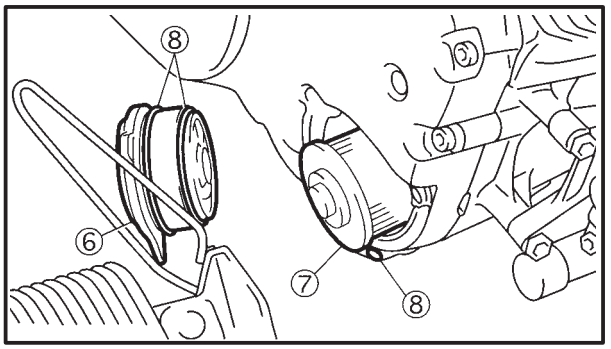

WARNING

Oil filter element replacement should be made cold exhaust pipe and muffler, at room temperature.

a. Remove the muffler ①, rear brake reservoir tank ②, element cover ③ and exhaust pipe (front cylinder) ④.
b. Remove the oil filter element cover plate ⑤, element cover ⑥ and oil filter element ⑦.
c. Check the O-ring ⑧ and replace it if it is cracked or damaged.
d. Install the new oil filter element and the element cover.

	Oil filter element cover bolt **10 Nm (1.0 m°kg, 7.2 ft°lb)**

e. Install the exhaust pipe (front cylinder), element cover plate, rear brake reservoir tank and muffler.
   Refer to “ENGINE” in chapter 4.

6. Check:
   - engine oil drain bolt gasket
     Damage → Replace.
7. Install:
   - gasket
   - engine oil drain bolt

	43Nm (4.3 m°kg, 31 ft°lb)

8. Fill:
   - crankcase
     (with the specified amount of the recommended engine oil)

Quantity
Total amount
3.6 L (3.2 Imp qt, 3.8 US qt)
Without oil filter element replacement
3.0 L (2.6 Imp qt, 3.2 US qt)
With oil filter element replacement
3.1 L (2.7 Imp qt, 3.3 US qt)

9. Install:
   - o-ring
   - engine oil filter cap
10. Start the engine, warm it up for several minutes, and then turn it off.
11. Check:
    - engine
      (for engine oil leaks)
12. Check:
    - engine oil level
      Refer to “CHECKING THE ENGINE OIL LEVEL”.

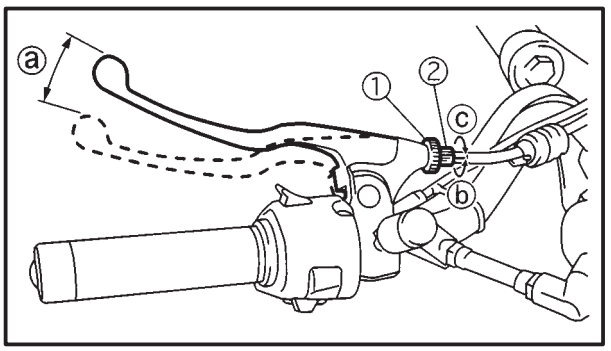

EAS00078

ADJUSTING THE CLUTCH CABLE FREE PLAY

1. Check:
   - clutch cable free play ⓐ
     Out of specification → Adjust.

Clutch cable free play (at the end of the clutch lever)
5 √ 10 mm (0.2 √ 0.39 in)

2. Adjust:
   - clutch cable free play

▼▼▼▼▼▼▼▼▼▼▼▼▼▼▼▼▼▼▼▼▼▼▼▼▼▼▼▼▼▼▼▼

Handlebar side

a. Loosen the locknut ①.
b. Turn the adjusting screw ② in direction ⓑ or ⓒ until the specified clutch cable free play is obtained.

Direction ⓑ	**Clutch cable free play is increased.**
Direction ⓒ	**Clutch cable free play is decreased.**

c. Tighten the locknut.

NOTE:

If the specified clutch cable free play cannot be obtained as described above, perform the mechanism adjustment procedure described below.

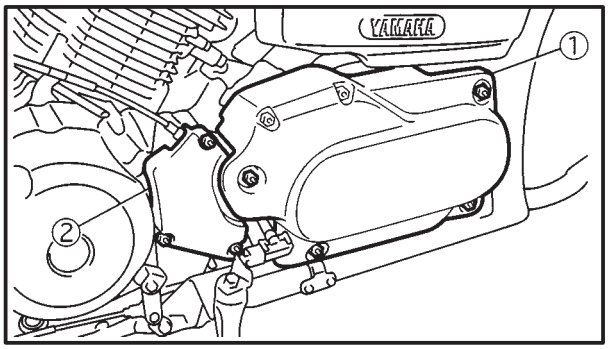

3. Remove:
   - left side cover ①
   - clutch adjusting cover ②

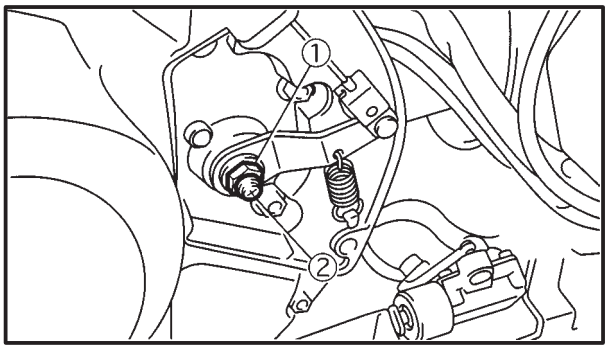

4. Adjust:
   - clutch mechanism

▼▼▼▼▼▼▼▼▼▼▼▼▼▼▼▼▼▼▼▼▼▼▼▼▼▼▼▼▼▼▼▼

Engine side

a. Loosen the locknut ①.
b. Turn in the adjusting screw ② until it is lightly seated.
c. Turn the adjusting screw out 1/4 of a turn.
d. Tighten the locknut.
e. Check the clutch cable free play again and ajust it if necessary.

▲▲▲▲▲▲▲▲▲▲▲▲▲▲▲▲▲▲▲▲▲▲▲▲▲▲▲▲▲▲▲▲

EAS00086

CLEANING THE AIR FILTER ELEMENT

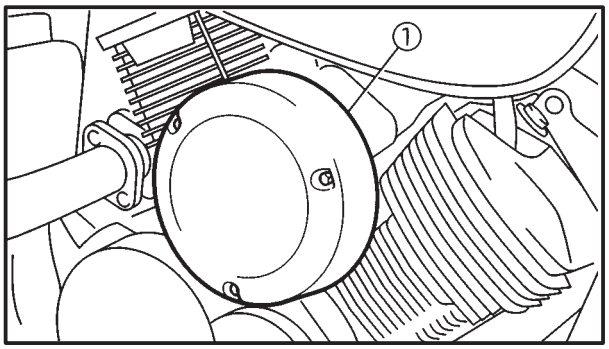

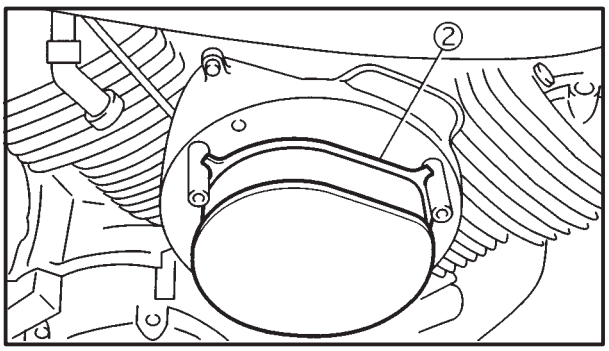

1. Remove:
   - air filter case cover ①
   - air filter element ②

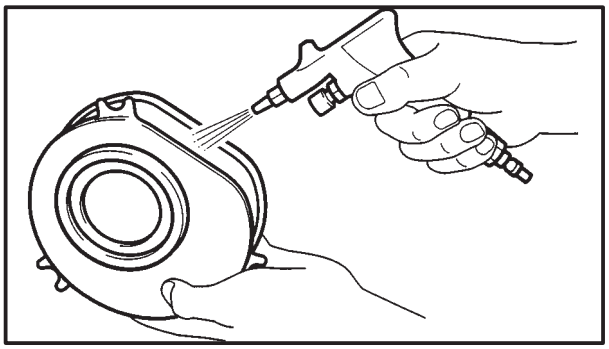

2. Clean:
   - air filter element
     Apply compressed air to the outer surface of the air filter element.

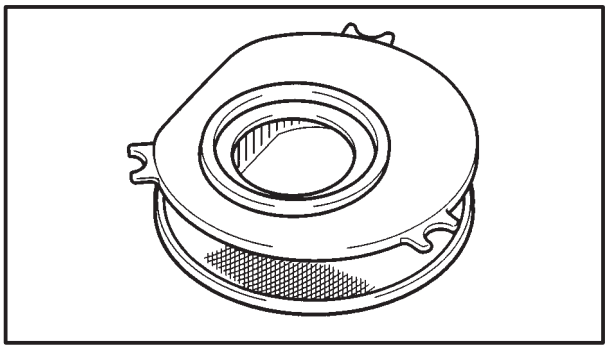

3. Check:
   - air filter element
     Damage → Replace.
4. Install:
   - air filter element
   - air filter case cover

CAUTION:

Never operate the engine without the air filter element installed. Unfiltered air will cause rapid wear of engine parts and may damage the engine. Operating the engine without the air filter element will also affect the carburetor turning, leading to poor engine performance and possible overheating.

NOTE:

When installing the air filter element into the air filter case cover, be sure their sealing surfaces are aligned to prevent any air leaks.

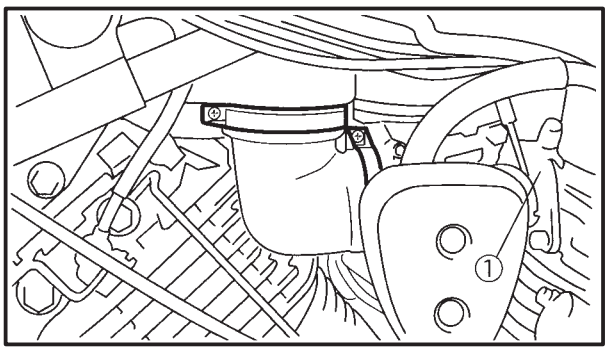

EAS00094

CHECKING THE CARBURETOR JOINT AND INTAKE MANIFOLD

1. Check:
   - carburetor joint ①
     Cracks/damage → Replace.
     Refer to “CARBURETOR” in chapter 6.

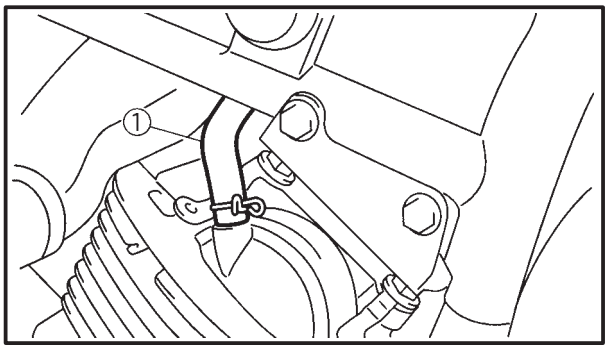

EAS00098

CHECKING THE BREATHER HOSE

1. Remove:
   - cylinder head cover
2. Check:
   - cylinder head breather hose ①
     Cracks/damage → Replace.
     Loose connection → Connect properly.

CAUTION:

Make sure that the cylinder head breather hose is routed correctly.

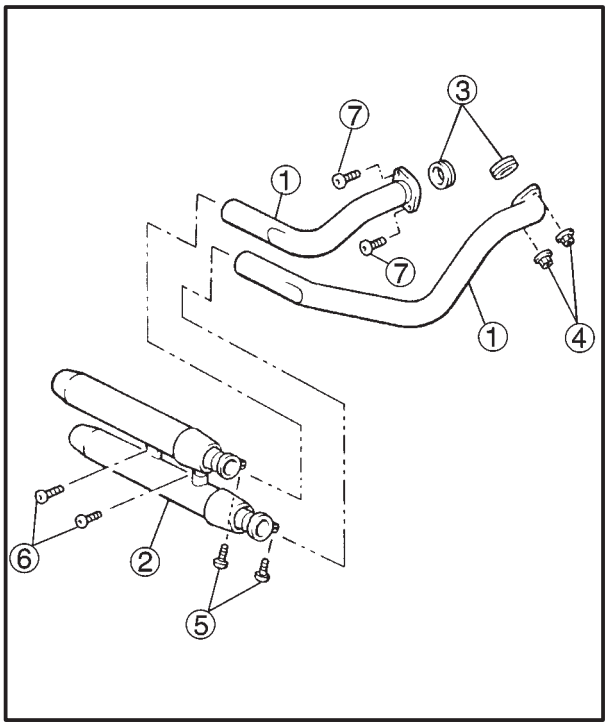

EAS00100

CHECKING THE EXHAUST SYSTEM

The following procedure applies to all of the exhaust pipes, mufflers and gaskets.

1. Check:
   - exhaust pipes ①
   - muffler ②
     Cracks/damage → Replace.
   - gaskets ③
     Exhaust gas leaks → Replace.
2. Check:
   - tightening torque

Exhaust pipe nut ④
20 Nm (2.0 m°kg, 14 ft°lb)
Exhaust pipe and muffler bolt ⑤
20 Nm (2.0 m°kg, 14 ft°lb)
Muffler and muffler bracket bolt ⑥
25 Nm (2.5 m°kg, 18 ft°lb)
Exhaust pipe bolts ⑦
20 Nm (2.0 m°kg, 14 ft°lb)

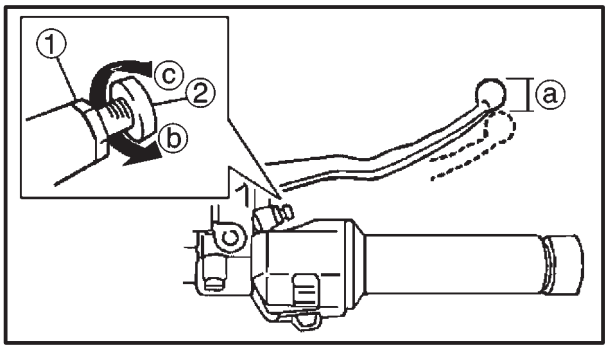

EAS00108

CHASSIS

ADJUSTING THE FRONT BRAKE

1. Check:
   - brake lever free play ⓐ
     Out of specification → Adjust.

Brake lever free play (at the end of the brake lever) **5 √ 8 mm (0.20 √ 0.31 in)**

2. Adjust:
   - brake lever free play

a. Loosen the locknut ①.
b. Turn the adjusting bolt ② in direction ⓑ or ⓒ until the specified brake lever free play is obtained.

Direction ⓒ →	**Brake lever free play is increased.**
Direction ⓑ →	**Brake lever free play is decreased.**

c. Tighten the locknut.

⚠ WARNING

A soft or spongy feeling in the brake lever can indicate the presence of air in the brake system. Before the vehicle is operated, the air must be removed by bleeding the brake system. Air in the brake system will considerably reduce braking performance and could result in loss of control and possibly an accident. Therefore, inspect and, if necessary, bleed the brake system.

CAUTION:

After adjusting the brake lever free play, make sure that there is no brake drag.

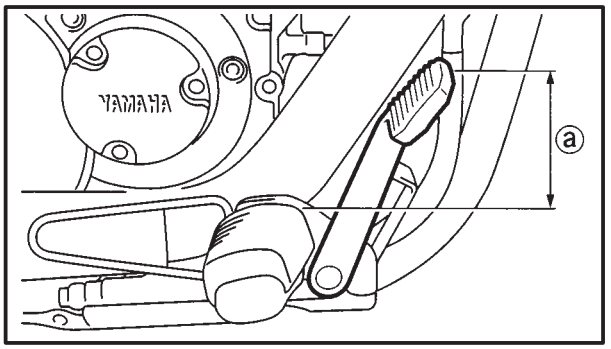

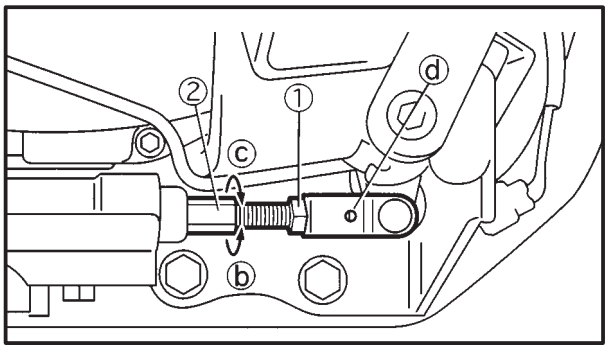

EAS00110

ADJUSTING THE REAR BRAKE

1. Check:
   - brake pedal position
     (distance ⓐ from the top of the rider footrest to the top of the brake pedal)
     Out of specification → Adjust.

Brake pedal position (below the top of the rider footrest) **81.8 mm (3.22 in)**

2. Adjust:
   - brake pedal position

▼▼▼▼▼▼▼▼▼▼▼▼▼▼▼▼▼▼▼▼▼▼▼▼▼▼▼▼▼▼▼▼▼▼

a. Loosen the locknut ①.
b. Turn the adjusting bolt ② in direction ⓑ or ⓒ until the specified brake pedal position is obtained.

Direction ⓑ → Brake pedal is raised.
Direction ⓒ → Brake pedal is lowered.

⚠ WARNING

After adjusting the brake pedal position, check that the end of the adjusting bolt ② is visible through the hole ⓓ.

c. Tighten the locknut ① to specification.

Locknut **16 Nm (1.6 m°kg, 12 ft°lb)**

⚠ WARNING

A soft or spongy feeling in the brake pedal can indicate the presence of air in the brake system. Before the vehicle is operated, the air must be removed by bleeding the brake system. Air in the brake system will considerably reduce braking performance and could result in loss of control and possibly an accident. Therefore, inspect and, if necessary, bleed the brake system.

CAUTION:

After adjusting the brake pedal position, make sure that there is no brake drag.

▲▲▲▲▲▲▲▲▲▲▲▲▲▲▲▲▲▲▲▲▲▲▲▲▲▲▲▲▲▲▲▲▲▲

3. Adjust:
   - rear brake light switch
     Refer to “ADJUSTING THE REAR BRAKE LIGHT SWITCH”.

EAS00115

CHECKING THE BRAKE FLUID LEVEL

1. Stand the motorcycle on a level surface.

NOTE:

- Place the motorcycle on a suitable stand.
- Make sure that the motorcycle is upright.

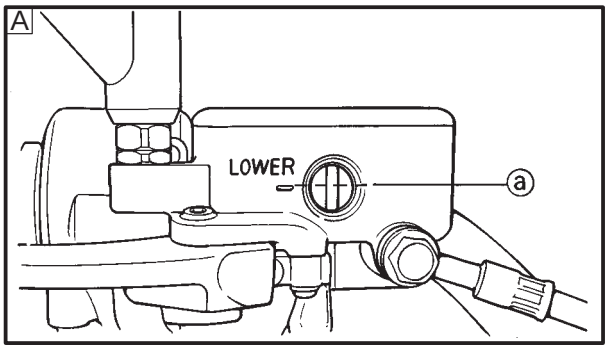

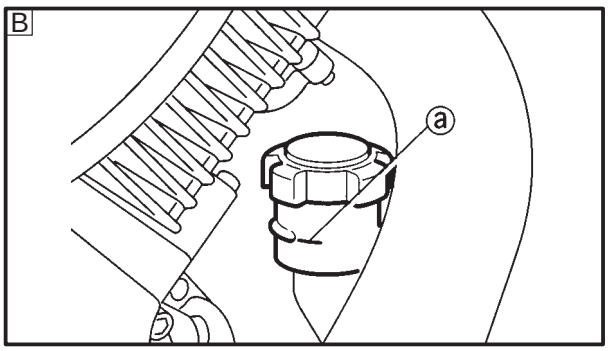

2. Check;
   - brake fluid level
     Below the minimum level mark ⓐ → Add the recommended brake fluid to the proper level.

	Recommended brake fluid **DOT 4**

A Front brake

B Rear brake

WARNING

- **Use only the designated brake fluid. Other brake fluids may cause the rubber seals to deteriorate, causing leakage and poor brake performance.**
- **Refill with the same type of brake fluid that is already in the system. Mixing brake fluids may result in a harmful chemical reaction, leading to poor brake performance.**
- **When refilling, be careful that water does not enter the reservoir. Water will significantly lower the boiling point of the brake fluid and could cause vapor lock.**

CAUTION:

Brake fluid may damage painted surfaces and plastic parts. Therefore, always clean up any spilt brake fluid immediately.

NOTE:

In order to ensure a correct reading of the brake fluid level, make sure that the top of the reservoir is horizontal.

EAS00128

ADJUSTING THE REAR BRAKE LIGHT SWITCH

NOTE:

The rear brake light switch is operated by movement of the brake pedal.
The rear brake light switch is properly adjusted when the brake light comes on just before the braking effect starts.

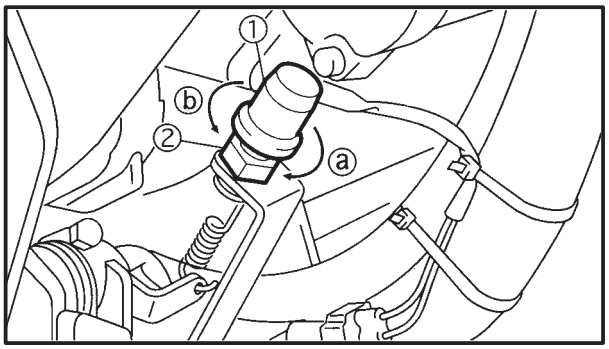

1. Check:
   °rear brake light operation timing
   Incorrect → Adjust.
2. Adjust:
   °rear brake light operation timing

▼▼▼▼▼▼▼▼▼▼▼▼▼▼▼▼▼▼▼▼▼▼▼▼▼▼▼▼▼▼▼▼▼▼

a. Hold the main body ① of the rear brake light switch so that it does not rotate and turn the adjusting nut ② in direction ⓐ or ⓑ until the rear brake light comes on at the proper time.

Direction ⓐ →	**Brake light comes on sooner.**
Direction ⓑ →	**Brake light comes on later.**

▲▲▲▲▲▲▲▲▲▲▲▲▲▲▲▲▲▲▲▲▲▲▲▲▲▲▲▲▲▲▲▲▲▲

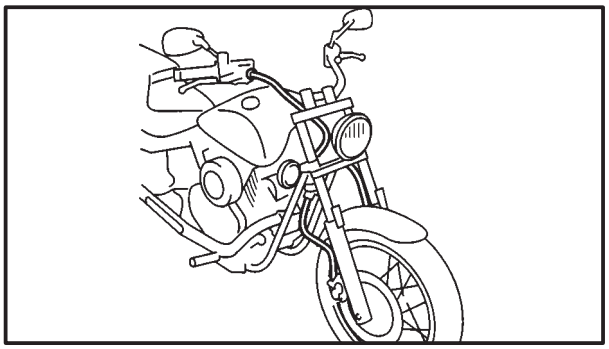

EAS00131

CHECKING THE BRAKE HOSES

The following procedure applies to all of the brake hoses and clamps.

1. Check:
   °brake hose
   Cracks/damage/wear → Replace.
2. Check:
   °brake hose clamp
   Loose connection → Tighten.
3. Hold the motorcycle upright and apply the brake.
4. Check:
   °brake hose
   Activate the brake several times.
   Brake fluid leakage → Replace the damaged hose.
   Refer to “FRONT AND REAR BRAKES” in chapter 7.

EAS00134

BLEEDING THE HYDRAULIC BRAKE SYSTEM

WARNING

Bleed the hydraulic brake system whenever:
- **the system was disassembled,**
- **a brake hose was loosened or removed,**
- **the brake fluid level is very low,**
- **brake operation is faulty.**

NOTE:
- Be careful not to spill any brake fluid or allow the brake master cylinder reservoir or brake fluid reservoir to overflow.
- When bleeding the hydraulic brake system, make sure that there is always enough brake fluid before applying the brake. Ignoring this precaution could allow air to enter the hydraulic brake system, considerably lengthening the bleeding procedure.
- If bleeding is difficult, it may be necessary to let the brake fluid settle for a few hours. Repeat the bleeding procedure when the tiny bubbles in the hose have disappeared.

1. Stand the motorcycle on a level surface.

NOTE:
- Place the motorcycle on a suitable stand.
- Make sure that the motorcycle is upright.

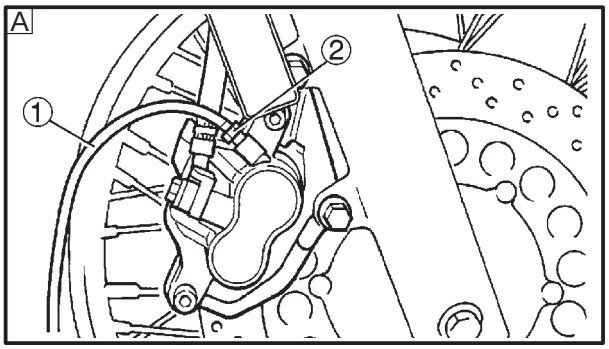

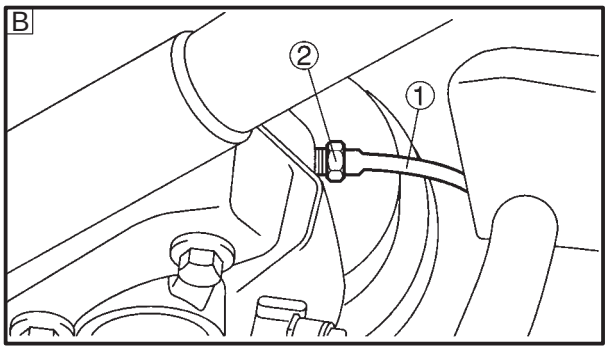

2. Bleed:
   - hydraulic brake system

▼▼▼▼▼▼▼▼▼▼▼▼▼▼▼▼▼▼▼▼▼▼▼▼▼▼▼▼▼▼▼▼

a. Add the recommended brake fluid to the proper level.
b. Install the diaphragm (brake master cylinder reservoir or brake fluid reservoir).
c. Connect a clear plastic hose ① tightly to the bleed screw ②.

A : Front B : Rear

d. Place the other end of the hose into a container.
e. Slowly apply the brake several times.
f. Fully squeeze the brake lever or fully depress the brake pedal and hold it in position.
g. Loosen the bleed screw.
   This will release the tension and cause the brake lever to contact the throttle grip or the brake pedal to fully extend.

h. Tighten the bleed screw and then release the brake lever or brake pedal.
i. Repeat steps (e) to (h) until all of the air bubbles have disappeared from the brake fluid in the plastic hose.
j. Tighten the bleed screw to specification.

	Bleed screw **6 Nm (0.6 m°kg, 4.3 ft°lb)**

k. Fill the reservoir to the proper level.
Refer to “CHECKING THE BRAKE FLUID LEVEL”.

WARNING

After bleeding the hydraulic brake system, check the brake operation.

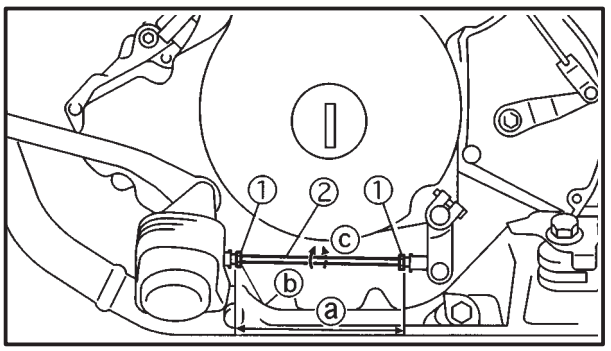

EAS00137

ADJUSTING THE SHIFT PEDAL

NOTE:

The shift pedal position is determined by the adjusting bolt length ⓐ.

1. Measure:
   °adjusting the length ⓐ
   Incorrect → Adjust.

	Adjusting bolt length **114.7 mm (4.52 in)**

2. Adjust:
   °adjusting bolt length ⓐ

a. Loosen both locknuts ①
b. Turn the adjusting bolt ② in direction ⓑ or ⓒ to obtain the correct shift pedal position.

Direction ⓑ → shift pedal is raised.
Direction ⓒ → shift pedal is lowered.

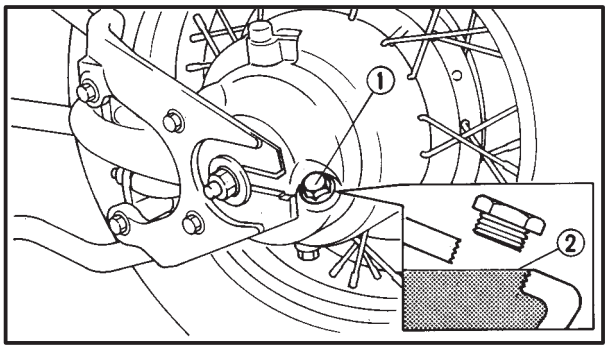

EAS00144

CHECKING THE FINAL DRIVE OIL LEVEL

1. Stand the motorcycle on a level surface.

NOTE:

°Place the motorcycle on a suitable stand.
°Make sure that the motorcycle is upright.

2. Remove:
   °final drive housing oil filler bolt ①
3. Check:
   °final drive oil level
   The final drive oil level should be to the bottom brim ② of the filler hole.
   Below the bottom brim → Add the recommended final drive oil to the proper level.

Recommended final drive oil
SAE 80 hypoid gear oil graded "GL-4", "GL-5" or "GL-6"
or
multi-purpose SAE 80W90 hypoid gear oil

4. Install:
   °final drive housing oil filler bolt

23Nm (2.3 m°kg, 17 ft°lb)

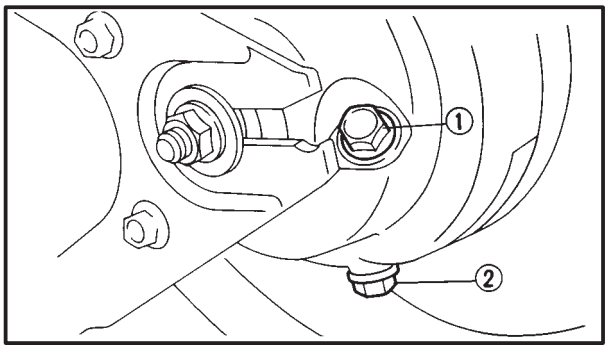

EAS00145

CHANGING THE FINAL DRIVE OIL

1. Place a container under the final drive housing.
2. Remove:
   °final drive housing oil filler bolt ①
   °final drive housing oil drain bolt ②
   Completely drain the final drive housing of its oil.
3. Check:
   °final drive housing oil drain bolt gasket
   Damage → Replace.
4. Install:
   °final drive housing oil drain bolt

23Nm (2.3 m°kg, 17 ft°lb)

5. Fill:
   °final drive housing
   (with the specified amount of the recommended final drive oil)

Quantity
0.2 L (0.18 Imp qt, 0.21 US qt)

Refer to “CHECKING THE FINAL DRIVE OIL LEVEL”.

EAS00146

CHECKING AND ADJUSTING THE STEERING HEAD

1. Stand the motorcycle on a level surface.

WARNING

Securely support the motorcycle so that there is no danger of it falling over.

NOTE:

Place the motorcycle on a suitable stand so that the front wheel is elevated.

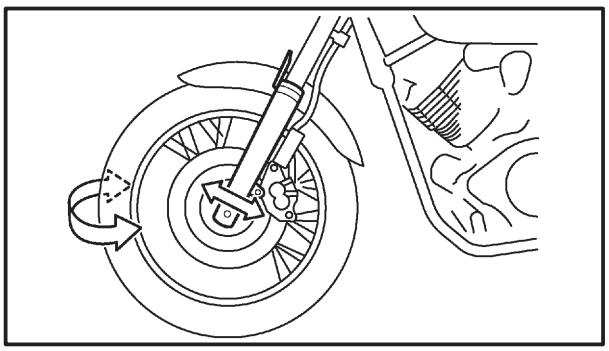

2. Check:
   - steering head
     Grasp the bottom of the front fork legs and gently rock the front fork.
     Looseness or binding → Adjust the steering head.

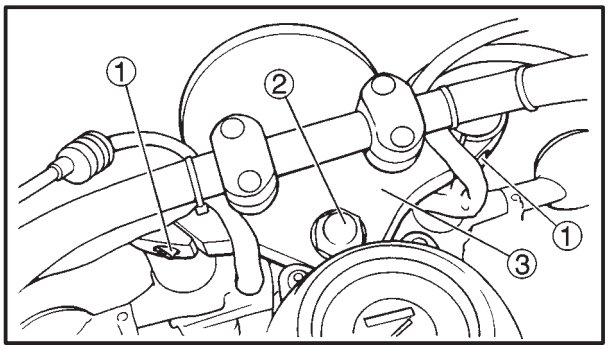

3. Remove:
   - upper bracket pinch bolt ①
   - steering stem nut ②
   - upper bracket ③

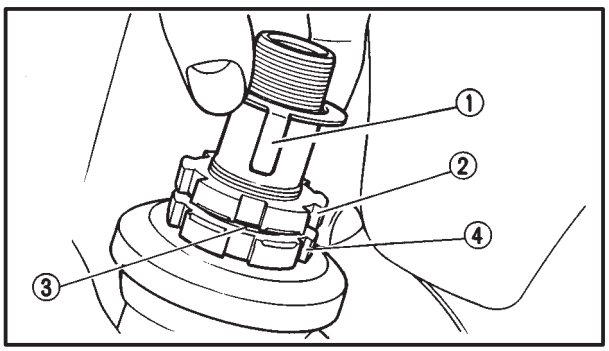

4. Adjust:
   - steering head

▼▼▼▼▼▼▼▼▼▼▼▼▼▼▼▼▼▼▼▼▼▼▼▼▼▼▼▼▼▼▼▼

a. Remove the lock washer ①, the upper ring nut ②, and the rubber washer ③.

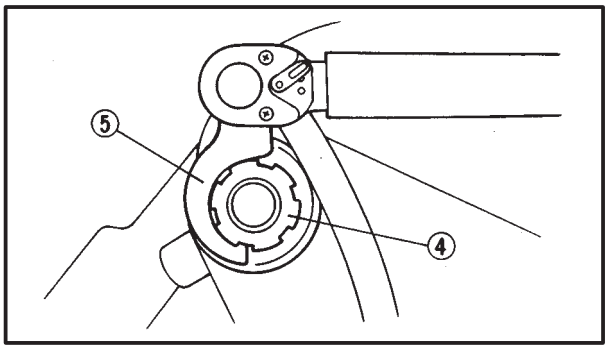

b. Loosen the lower ring nut ④ and then tighten it to specification with a ring nut wrench ⑤.

NOTE:

Set the torque wrench at a right angle to the ring nut wrench.

	Ring nut wrench **YU-33975, 90890-01403**

	Lower ring nut (initial tightening torque) **52 Nm (5.2 m°kg, 38 ft°lb)**

c. Loosen the lower ring nut ④ completely, then tighten it to specification.

⚠ WARNING

Do not overtighten the lower ring nut.

	Lower ring nut (final tightening torque) **18 Nm (1.8 m°kg, 13 ft°lb)**

d. Check the steering head for looseness or binding by turning the front fork all the way in both directions. If any binding is felt, remove the lower bracket and inspect the upper and lower bearings.
   Refer to "STEERING HEAD AND HANDLEBAR" in chapter 7.
e. Install the rubber washer ③.
f. Install the upper ring nut ②.
g. Finger tighten the upper ring nut ②, then align the slots of both ring nuts. If necessary, hold the lower ring nut and tighten the upper ring nut until their slots are aligned.
h. Install the lock washer ①.

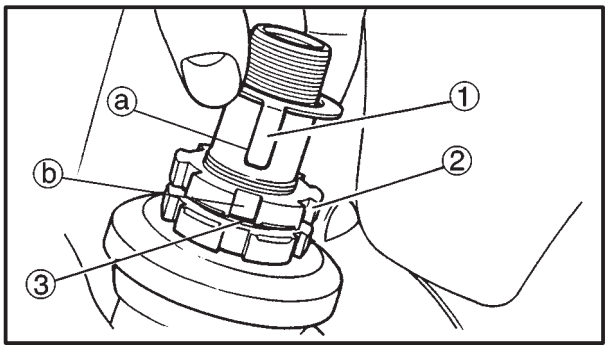

NOTE:

Make sure that the lock washer tabs ⓐ sit correctly in the ring nut slots ⓑ.

▲▲▲▲▲▲▲▲▲▲▲▲▲▲▲▲▲▲▲▲▲▲▲▲▲▲▲▲▲▲

5. Install:
   - upper bracket
   - steering stem nut
     110 Nm (11.0 m°kg, 80 ft°lb)
   - upper bracket pinch bolt
     20 Nm (2.0 m°kg, 14 ft°lb)

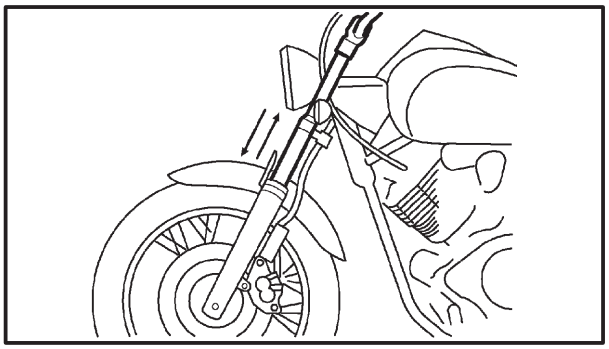

EAS00149

CHECKING THE FRONT FORK

1. Stand the motorcycle on a level surface.

WARNING

Securely support the motorcycle so that there is no danger of it falling over.

2. Check:
   - inner tube
     Damage/scratches → Replace.
   - oil seal
     Oil leakage → Replace.
3. Hold the motorcycle upright and apply the front brake.
4. Check:
   - operation
     Push down hard on the handlebar several times and check if the front fork rebounds smoothly.
     Unsmooth operation → Repair.
     Refer to “FRONT FORK” in chapter 7.

EAS00159

ADJUSTING THE REAR SHOCK ABSORBER ASSEMBLY

WARNING

Securely support the motorcycle so that there is no danger of it falling over.

CAUTION:

Never go beyond the maximum or minimum adjustment positions.

1. Adjust:
   - spring preload

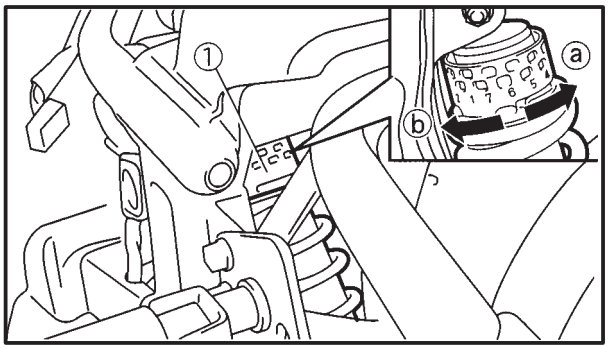

Ring nut wrench
One of owner's tool KIT (IHX-28135-00)

a. Turn the adjusting knob ① in direction ⓐ or ⓑ.

Direction ⓐ →	**Spring preload is increased (suspension is harder).**
Direction ⓑ →	**Spring preload is decreased (suspension is softer).**

Adjusting position
Standard: 3
Minimum: 1 (soft)
Maximum: 7 (hard)

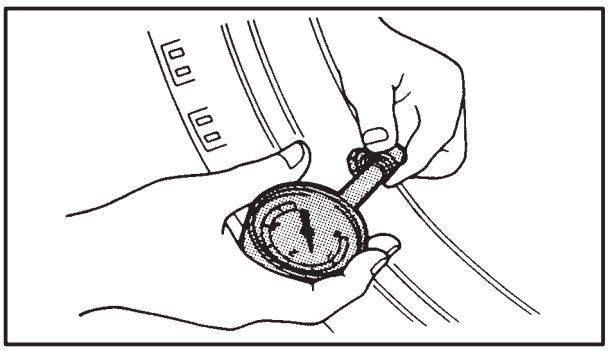

EB304174

CHECKING THE TIRES

The following procedure applies to both of the tires.

1. Measure:
   - tire pressure
     Out of specification → Regulate.

⚠ WARNING

- **The tire pressure should only be checked and regulated when the tire temperature equals the ambient air temperature.**
- **The tire pressure and the suspension must be adjusted according to the total weight (including cargo, rider, passenger and accessories) and the anticipated riding speed.**
- **Operation of an overloaded motorcycle could cause tire damage, an accident or an injury.**

NEVER OVERLOAD THE MOTORCYCLE.

Basic weight: (with oil and full fuel tank)	**275 kg (606.4 lb)**	
Maximum load*:	**200 kg (441 lb)**	
Cold tire pressure:	**Front**	**Rear**
Up to 90 kg (198 lb) load*	**200 kPa (2.00 kg/cm^2, 28.5 psi)**	**225 kPa (2.25 kg/cm^2, 32.0 psi)**
90 kg (198 lb) / maximum load*	**225 kPa (2.25 kg/cm^2, 32.0 psi)**	**250 kPa (2.50 kg/cm^2, 35.6 psi)**
High speed riding	**225 kPa (2.25 kg/cm^2, 32.0 psi)**	**250 kPa (2.50 kg/cm^2, 35.6 psi)**

*: total of cargo, rider, passenger and accessories

WARNING

It is dangerous to ride with a worn-out tire. When the tire tread reaches the wear limit, replace the tire immediately.

2. Check:
   - tire surfaces
     Damage/wear → Replace the tire.

Minimum tire tread depth
1.6 mm (0.06 in)

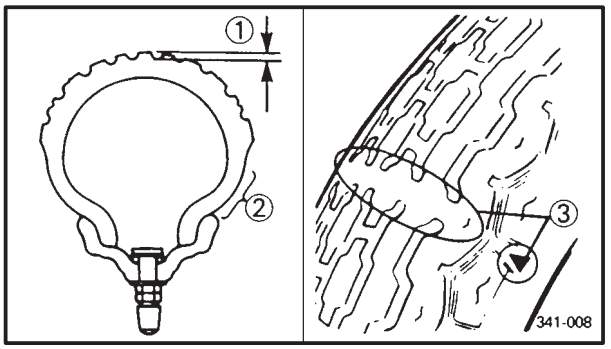

① Tire tread depth
② Side wall
③ Wear indicator

WARNING

- **Do not use a tubeless tire on a wheel designed only for tube tires to avoid tire failure and personal injury from sudden deflation.**
- **When using a tube tire, be sure to install the correct tube.**
- **Always replace a new tube tire and a new tube as a set.**
- **To avoid pinching the tube, make sure that the wheel rim band and tube are centered in the wheel groove.**

° Patching a punctured tube is not recommended. If it is absolutely necessary to do so, use great care and replace the tube as soon as possible with a good quality replacement.

Tube wheel	Tubeless wheel
Tube tire only	Tube or tubeless tire

° After extensive tests, the tires listed below have been approved by Yamaha Motor Co., Ltd. for this model. Then front and rear tires should always be by the same manufacturer and of the same design. No guarantee concerning handling characteristics can be given if a tire combination other than one approved by Yamaha is used on this motorcycle.

Front tire:

Manufacturer	Type	Size
BRIDGE-STONE	110/90-18 61S	EXEDRA L309
DUNLOP	110/90-18 61S	K555F

Rear tire:

Manufacturer	Type	Size
BRIDGE-STONE	170/80-15 M/C 77S	EXEDRA G546G
DUNLOP	170/80-15 M/C 77S	K555

WARNING

° New tires have a relatilvely low grip on the road surface until they have been slightly worn.
Therefor, approximately 100 km (62.4 mi) should be traveled at normal speed before any highspeed riding is done.

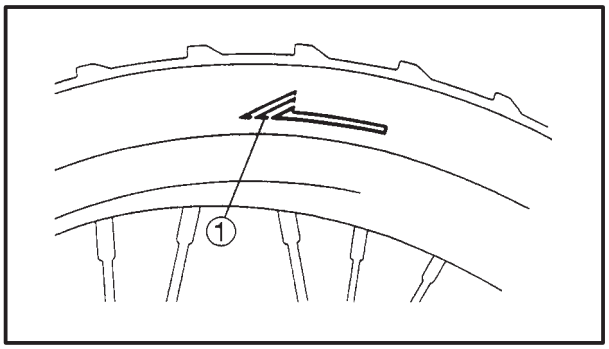

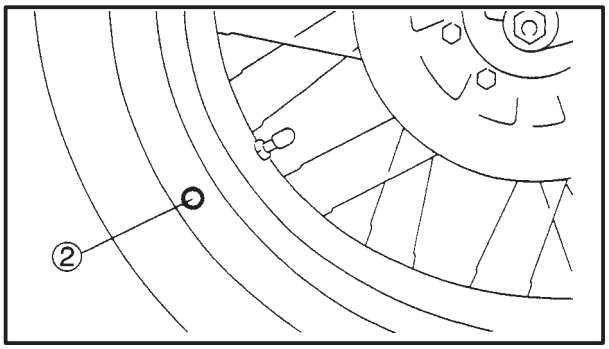

NOTE:

For tires with a direction of rotation mark ①:
- Install the tire with the mark pointing in the direction of wheel rotation.
- Align the mark ② with the valve installation point.

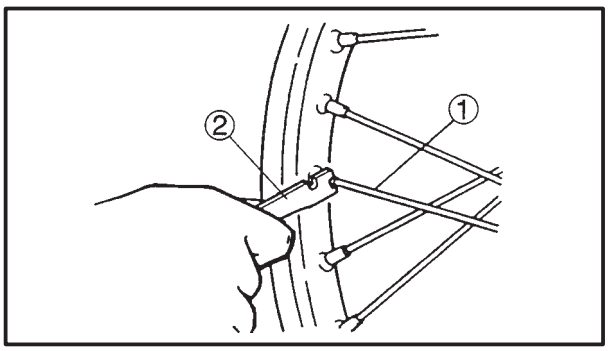

EAS00169

CHECKING AND TIGHTENING THE SPOKES

The following procedure applies to all of the spokes.

1. Check:
   - spoke ①
     Bends/damage → Replace.
     Loose → Tighten.
     Tap the spokes with a screwdriver.

NOTE:

A tight spoke will emit a clear, ringing tone; a loose spoke will sound flat.

2. Tighten:
   - spoke **3 Nm (0.3 m·kg, 2.2 ft·lb)**
     (with a spoke wrench ②)

NOTE:

Be sure to tighten the spokes before and after break-in.

EAS00170

CHECKING AND LUBRICATING THE CABLES

The following procedure applies to all of the cable sheaths and cables.

WARNING

Damaged cable sheaths may causes the cable to corrode and interfere with its movement. Replace damaged cable sheaths and cables as soon as possible.

1. Check:
   - cable sheath
     Damage → Replace.
2. Check:
   - cable operation
     Unsmooth operation → Lubricate.

Recommended lubricant
Engine oil or a suitable cable lubricant

NOTE:

Hold the cable end upright and pour a few drops of lubricant into the cable sheath or use a suitable lubing device.

EAS00171

LUBRICATING THE LEVERS AND PEDALS

Lubricate the pivoting point and metal-to-metal moving parts of the levers and pedals.

Recommended lubricant
Engine oil

EAS00172

LUBRICATING THE SIDESTAND

Lubricate the pivoting point and metal-to-metal moving parts of the sidestand.

Recommended lubricant
Engine oil

EAS00174

LUBRICATING THE REAR SUSPENSION

Lubricate the pivoting point and metal-to-metal moving parts of the rear suspension.

Recommended lubricant
Molybdenum disulfide grease

EB305020

ELECTRICAL SYSTEM

CHECKING AND CHARGING THE BATTERY

WARNING

Batteries generate explosive hydrogen gas and contain electrolyte which is made of poisonous and highly caustic sulfuric acid.
Therefore, always follow these preventive measures:

- **Wear protective eye gear when handling or working near batteries.**
- **Charge batteries in a well-ventilated area.**
- **Keep batteries away from fire, sparks or open flames (e.g., welding equipment, lighted cigarettes).**
- **DO NOT SMOKE when charging or handling batteries.**
- **KEEP BATTERIES AND ELECTROLYTE OUT OF REACH OF CHILDREN.**
- **Avoid bodily contact with electrolyte as it can cause severe burns or permanent eye injury.**

First aid in case of bodily contact:
External

- **SKIN – Wash with water.**
- **EYES – Flush with water for 15 minutes and get immediate medical attention.**

Internal
Drink large quantities of water or milk followed with milk of magnesia, beaten egg or vegetable oil. Get immediate medical attention.

CAUTION:

- **This is a sealed battery. Never remove the sealing caps because the balance between cells will not be maintained and battery performance will deteriorate.**
- **Charging time, charging amperage and charging voltage for a MF battery are different from those of conventional batteries. The MF battery should be charged as explained in the charging method illustrations. If the battery is overcharged, the electrolyte level will drop considerably. Therefore, take special care when charging the battery.**

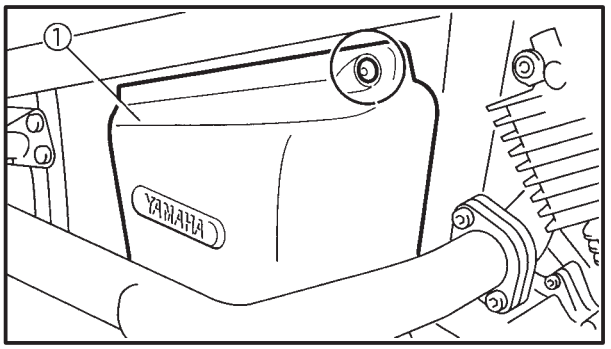

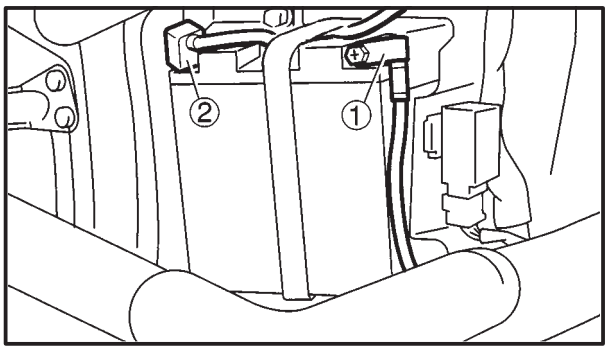

NOTE:

Since MF batteries are sealed, it is not possible to check the charge state of the battery by measuring the specific gravity of the electrolyte. Therefore, the charge of the battery has to be checked by measuring the voltage at the battery terminals.

1. Remove:
   - battery cover ①
2. Disconnect:
   - battery leads
     (from the battery terminals)

CAUTION:

First, disconnect the negative lead ①, then the positive lead ②.

3. Remove:
   - battery
4. Check:
   - battery charge

▼▼▼

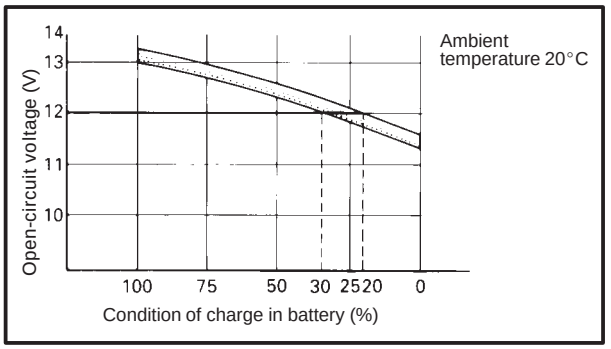

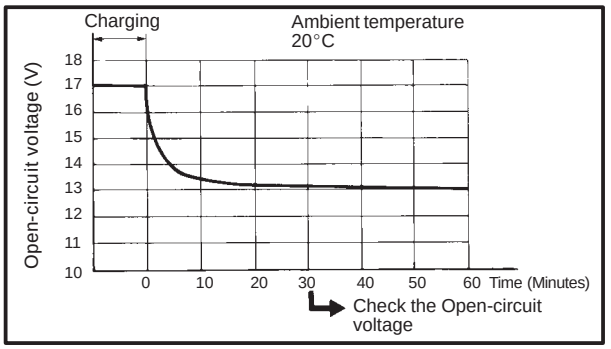

WARNING

Do not quick charge a battery.

CAUTION:

- **Make sure that the battery breather hose and battery vent are free of obstructions.**
- **Never remove the MF battery sealing caps.**
- **Do not use a high-rate battery charger. They force a high-amperage current into the battery quickly and can cause battery overheating and battery plate damage.**
- **If it is impossible to regulate the charging current on the battery charger, be careful not to overcharge the battery.**
- **When charging a battery, be sure to remove it from the motorcycle. (If charging has to be done with the battery mounted on the motorcycle, disconnect the negative lead from the battery terminal.)**
- **To reduce the chance of sparks, do not plug in the battery charger until the battery charger leads are connected to the battery.**
- **Before removing the battery charger lead clips from the battery terminals, be sure to turn off the battery charger.**
- **Make sure that the battery charger lead clips are in full contact with the battery terminal and that they are not shorted. A corroded battery charger lead clip may generate heat in the contact area and a weak clip spring may cause sparks.**
- **If the battery becomes hot to the touch at any time during the charging process, disconnect the battery charger and let the battery cool before reconnecting it. Hot batteries can explode!**
- **As shown in the following illustration, the open-circuit voltage of a MF battery stabilizes about 30 minutes after charging has been completed. Therefore, wait 30 minutes after charging is completed before measuring the open-circuit voltage.**

Charging method using a variable-current (voltage) type charger

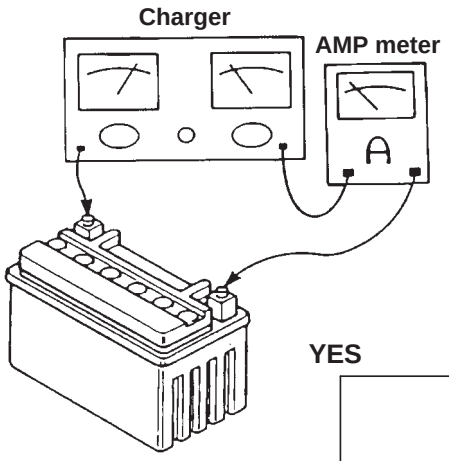

Measure the open-circuit voltage prior to charging.

NOTE:
Voltage should be measured 30 minutes after the machine is stopped.

Connect a charger and AMP meter to the battery and start charging.

NOTE:
Set the charging voltage at 16 √ 17 V. (If the setting is lower, charging will be insufficient. If too high, the battery will be over-charged.)

Make sure the current is higher than the standard charging current written on the battery.

YES → Adjust the voltage so that current is at standard charging level.

NO → By turning the charging voltage adjust dial, set the charging voltage at 20 √ 25 V.

Monitor the amperage for 3 √ 5 minutes to check if the standard charging current is reached.

YES → Adjust the voltage so that current is at standard charging level.

NO → If the current does not exceed standard charging current after 5 minutes, replace the battery.

Set the timer according to the charging time suitable for the open-circuit voltage.
Refer to “Battery condition checking steps.”

In case that charging requires more than 5 hours, it is advisable to check the charging current after a lapse of 5 hours. If there is any charge in the amperage, readjust the voltage to obtain the standard charging current.

Measure the battery open-circuit voltage after having left the battery unused for more than 30 minutes.
12.8 V or more --- Charging is complete.
12.7 V or less --- Recharging is required.
Under 12.0 V --- Replace the battery.

Charging method using a constant-voltage type charger

Measure the open-circuit voltage prior to charging.

NOTE:
Voltage should be measured 30 minutes after the machine is stopped.

↓

Connect a charger and AMP meter to the battery and start charging.

↓

Make sure the current is higher than the standard charging current written on the battery.

YES →

Charge the battery until the battery's charging voltage is 15 V.

NOTE:
Set the charging time at 20 hours (maximum).

↓

Measure the battery open-circuit voltage after having left the battery unused for more than 30 minutes.
12.8 V or more --- Charging is complete.
12.7 V or less --- Recharging is required.
Under 12.0 V --- Replace the battery.

NO →

This type of battery charger cannot charge the MF battery. A variable voltage charger is recommended.

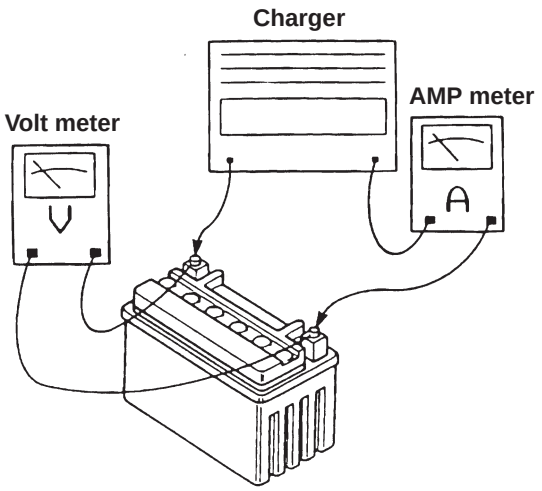

Charging method using a constant-current type charger
This type of battery charger cannot charge the MF battery.

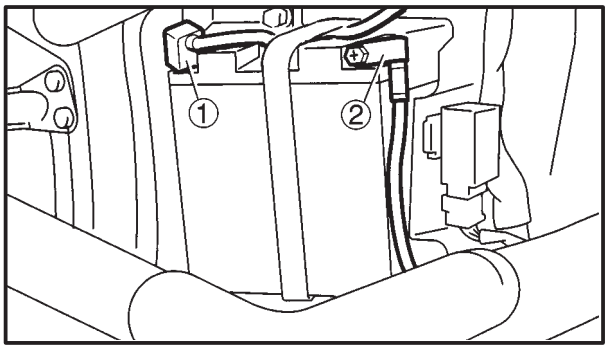

6. Check:
   °battery vent
   Obstruction → Clean.
7. Connect:
   °battery leads
   (to the battery terminals)

CAUTION:

First, connect the positive lead ①, then the negative lead ②.

8. Check:
   °battery terminals
   Dirt → Clean with a wire brush.
   Loose connection → Connect properly.
9. Lubricate:
   °battery terminals

	Recommended lubricant **Dielectric grease**

10. Install:
    °battery cover

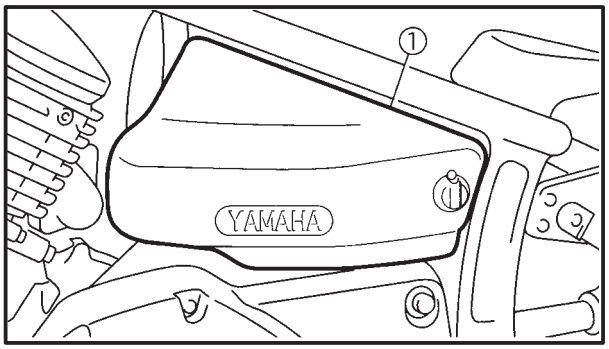

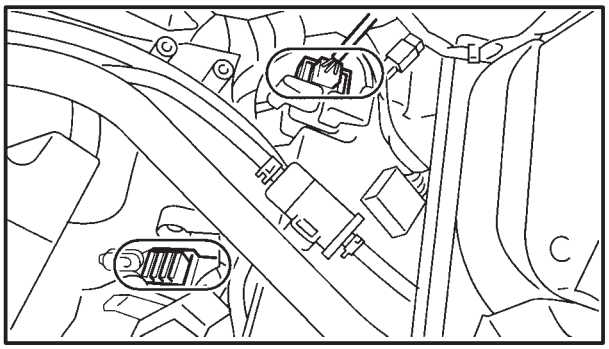

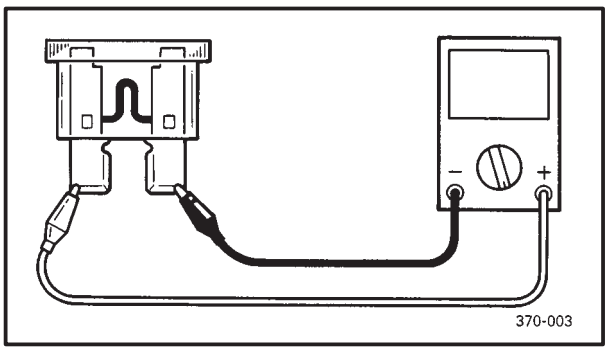

EAS00181

CHECKING THE FUSES

The following procedure applies to all of the fuses.

CAUTION:

To avoid a short circuit, always turn the main switch to "OFF" when checking or replacing a fuse.

1. Remove:
   - rider's seat
   - ignitor plate
     Refer to "FUEL TANK AND SEATS".
   - tool box cover ①
2. Check:
   - fuse

▼▼▼▼▼▼▼▼▼▼▼▼▼▼▼▼▼▼▼▼▼▼▼▼▼▼▼▼▼▼▼▼

a. Connect the pocket tester to the fuse and check it for continuity.

NOTE:

Set the pocket tester selector to "Ω × 1".

	Pocket tester **YU-03112, 90890-03112**

b. If the pocket tester indicates "∞", replace the fuse.

▲▲▲▲▲▲▲▲▲▲▲▲▲▲▲▲▲▲▲▲▲▲▲▲▲▲▲▲▲▲▲▲

3. Replace:
   - blown fuse

▼▼▼▼▼▼▼▼▼▼▼▼▼▼▼▼▼▼▼▼▼▼▼▼▼▼▼▼▼▼▼▼

a. Turn off the ignition.
b. Install a new fuse of the correct amperage rating.
c. Turn on the switches to verify if the electrical circuit is operational.
d. If the fuse immediately blows again, check the electrical circuit.

▲▲▲▲▲▲▲▲▲▲▲▲▲▲▲▲▲▲▲▲▲▲▲▲▲▲▲▲▲▲▲▲

Fuses	Amperage rating	Quantity
Main	**30A**	**1**
Headlight	**15A**	**1**
Carburetor heater	**15A**	**1**
Signals	**10A**	**1**
Ignition	**10A**	**1**
Back up	**5A**	**1**
Reserve	**30A**	**1**
Reserve	**15A**	**1**
Reserve	**10A**	**1**
Reserve	**5A**	**1**

WARNING

Never use a fuse with an amperage rating other than that specified. Improvising or using a fuse with the wrong amperage rating may cause extensive damage to the electrical system, cause the lighting and ignition systems to malfunction and could possibly cause a fire.

4. Install:
   - tool box cover
   - ignitor plate
   - rider's seat

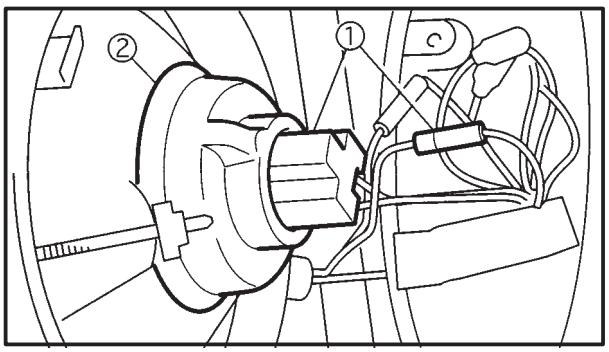

EAS00182

REPLACING THE HEADLIGHT BULB

1. Disconnect:
   - connectors ①
2. Remove
   - headlight bulb cover ②

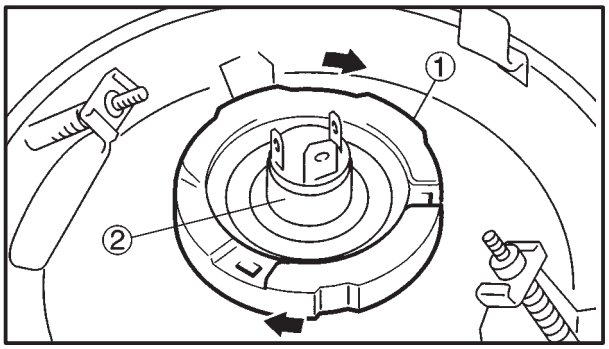

3. Remove:
   - headlight bulb holder ①
4. Remove:
   - headlight bulb ②

WARNING

Since the headlight bulb gets extremely hot, keep flammable products and your hands away from the bulb until it has cooled down.

5. Install:
   - headlight bulb (New)
     Secure the new headlight bulb with the headlight bulb holder.

CAUTION:

Avoid touching the glass part of the headlight bulb to keep it free from oil, otherwise the transparency of the glass, the life of the bulb and the luminous flux will be adversely affected. If the headlight bulb gets soiled, thoroughly clean it with a cloth moistened with alcohol or lacquer thinner.

5. Install:
   - headlight bulb holder
6. Install:
   - headlight bulb cover
7. Connect:
   - leads

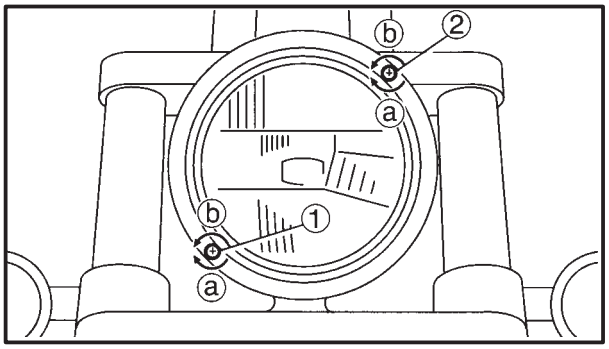

EAS00184

ADJUSTING THE HEADLIGHT BEAM

1. Adjust:
   - headlight beam (vertically)

▼▼▼▼▼▼▼▼▼▼▼▼▼▼▼▼▼▼▼▼▼▼▼▼▼▼▼▼▼▼▼▼

a. Turn the adjusting screw ① in direction ⓐ or ⓑ.

Direction ⓐ →	**Headlight beam is raised.**
Direction ⓑ →	**Headlight beam is lowered.**

▲▲▲▲▲▲▲▲▲▲▲▲▲▲▲▲▲▲▲▲▲▲▲▲▲▲▲▲▲▲▲▲

2. Adjust:
   - headlight beam (horizontally)

▼▼▼▼▼▼▼▼▼▼▼▼▼▼▼▼▼▼▼▼▼▼▼▼▼▼▼▼▼▼▼▼

a. Turn the adjusting knob ② in direction ⓐ or ⓑ.

Direction ⓐ →	**Headlight beam moves to the right.**
Direction ⓑ →	**Headlight beam moves to the left.**

▲▲▲▲▲▲▲▲▲▲▲▲▲▲▲▲▲▲▲▲▲▲▲▲▲▲▲▲▲▲▲▲

CHAPTER 4
ENGINE

ENGINE REMOVAL 4-1
MUFFLERS, BRAKE PEDAL AND SIDE COVER 4-1
LEADS, SHIFT PEDAL AND CLUTCH CABLE 4-3
ENGINE MOUNTING BOLTS 4-4
INSTALLING THE ENGINE 4-5

CYLINDER HEADS 4-6
REAR CYLINDER HEAD 4-6
FRONT CYLINDER HEAD 4-8
REMOVING THE CYLINDER HEADS 4-10
CHECKING THE CYLINDER HEADS 4-12
CHECKING THE TIMING CHAIN TENSIONER 4-13
INSTALLING THE CYLINDER HEADS 4-13

ROCKER ARMS AND CAMSHAFT 4-16
REMOVING THE ROCKER ARMS AND CAMSHAFT 4-17
CHECKING THE CAMSHAFTS 4-17
CHECKING THE ROCKER ARMS AND ROCKER ARM SHAFTS 4-18
INSTALLING THE CAMSHAFT AND ROCKER ARMS 4-19

VALVES AND VALVE SPRINGS 4-21
REMOVING THE VALVES 4-22
CHECKING THE VALVES AND VALVE GUIDES 4-22
CHECKING THE VALVE SEATS 4-24
CHECKING THE VALVE SPRINGS 4-26
INSTALLING THE VALVES 4-26

CYLINDERS AND PISTONS 4-28
REMOVING THE PISTONS 4-29
CHECKING THE CYLINDERS AND PISTONS 4-29
CHECKING THE PISTON RINGS 4-31
CHECKING THE PISTON PINS 4-32
INSTALLING THE PISTONS AND CYLINDERS 4-32

TIMING GEARS 4-34
REMOVING THE TIMING DRIVE GEARS 4-35
CHECKING THE TIMING CHAINS, CAMSHAFT SPROCKETS AND TIMING CHAIN GUIDES 4-35
CHECKING THE PRIMARY DRIVE 4-36
INSTALLING THE TIMING DRIVE GEARS 4-36

CLUCTH 4-38
RIGHT CRANKCASE COVER 4-38
CLUTCH ASSEMBLY 4-40
REMOVING THE CLUTCH 4-42
CHECKING THE FRICTION PLATES 4-42
CHECKING THE PRESSURE PLATE 4-43
CHECKING THE CLUTCH BOSS 4-43
CHECKING THE CLUTCH PUSH RODS 4-43
CHECKING THE CLUTCH PLATES 4-44
CHECKING THE CLUTCH SPRING AND CLUTCH SPRING SEAT PLATE 4-44
CHECKING THE CLUTCH HOUSING 4-44
INSTALLING THE CLUTCH 4-45

GENERATOR AND STARTER CLUTCH 4-47
STATOR COIL AND PICKUP COIL 4-47
GENERATOR AND STARTER CLUTCH 4-48
REMOVING THE GENERATOR 4-49
CHECKING THE STARTER CLUTCH 4-50
INSTALLING THE GENERATOR 4-51

SHIFT SHAFT 4-53
SHIFT SHAFT AND STOPPER LEVER 4-53
CHECKING THE SHIFT SHAFT 4-54
CHECKING THE STOPPER LEVER 4-54
INSTALLING THE SHIFT SHAFT 4-54

OIL PUMP 4-55
CHECKING THE OIL PUMP 4-57
CHECKING THE OIL DELIVERY PIPES 4-57
CHECKING THE OIL STRAINER 4-57
ASSEMBLING THE OIL PUMP 4-58

CRANKSHAFT AND CONNECTING RODS 4-59
CRANKCASE 4-59
CRANKSHAFT AND CONNECTING RODS 4-60
DISASSEMBLING THE CRANKCASE 4-61
REMOVING THE CRANKSHAFT ASSEMBLY 4-62
REMOVING THE CONNECTING RODS 4-62
CHECKING THE CRANKSHAFT AND CONNECTING RODS 4-62
CHECKING THE BEARINGS AND OIL SEALS 4-65
INSTALLING THE CRANKSHAFT 4-65
ASSEMBLING THE CRANKCASE 4-66

TRANSMISSION 4-68
CHECKING THE SHIFT FORKS 4-69
CHECKING THE SHIFT DRUM ASSEMBLY 4-69
CHECKING THE TRANSMISSION 4-70
INSTALLING THE TRANSMISSION 4-71

MIDDLE GEAR 4-72
MIDDLE DRIVE PINION GEAR 4-72
MIDDLE DRIVEN PINION GEAR 4-73
REMOVING THE MIDDLE DRIVE SHAFT ASSEMBLY 4-75
DISASSEMBLING THE MIDDLE DRIVE SHAFT ASSEMBLY 4-75
REMOVING THE MIDDLE DRIVEN SHAFT ASSEMBLY 4-76
CHECKING THE MIDDLE DRIVE SHAFT ASSEMBLY 4-76
CHECKING THE MIDDLE DRIVEN SHAFT ASSEMBLY 4-76
ASSEMBLING THE MIDDLE DRIVE SHAFT ASSEMBLY 4-77
ASSEMBLING THE MIDDLE DRIVEN SHAFT ASSEMBLY 4-78
INSTALLING THE MIDDLE GEAR ASSEMBLY AND
ADJUSTING THE BACKLASH 4-78
INSTALLING THE UNIVERSAL JOINT 4-80
ALIGNING THE MIDDLE GEAR 4-81

ENGINE

ENGINE REMOVAL

MUFFLERS, BRAKE PEDAL AND SIDE COVER

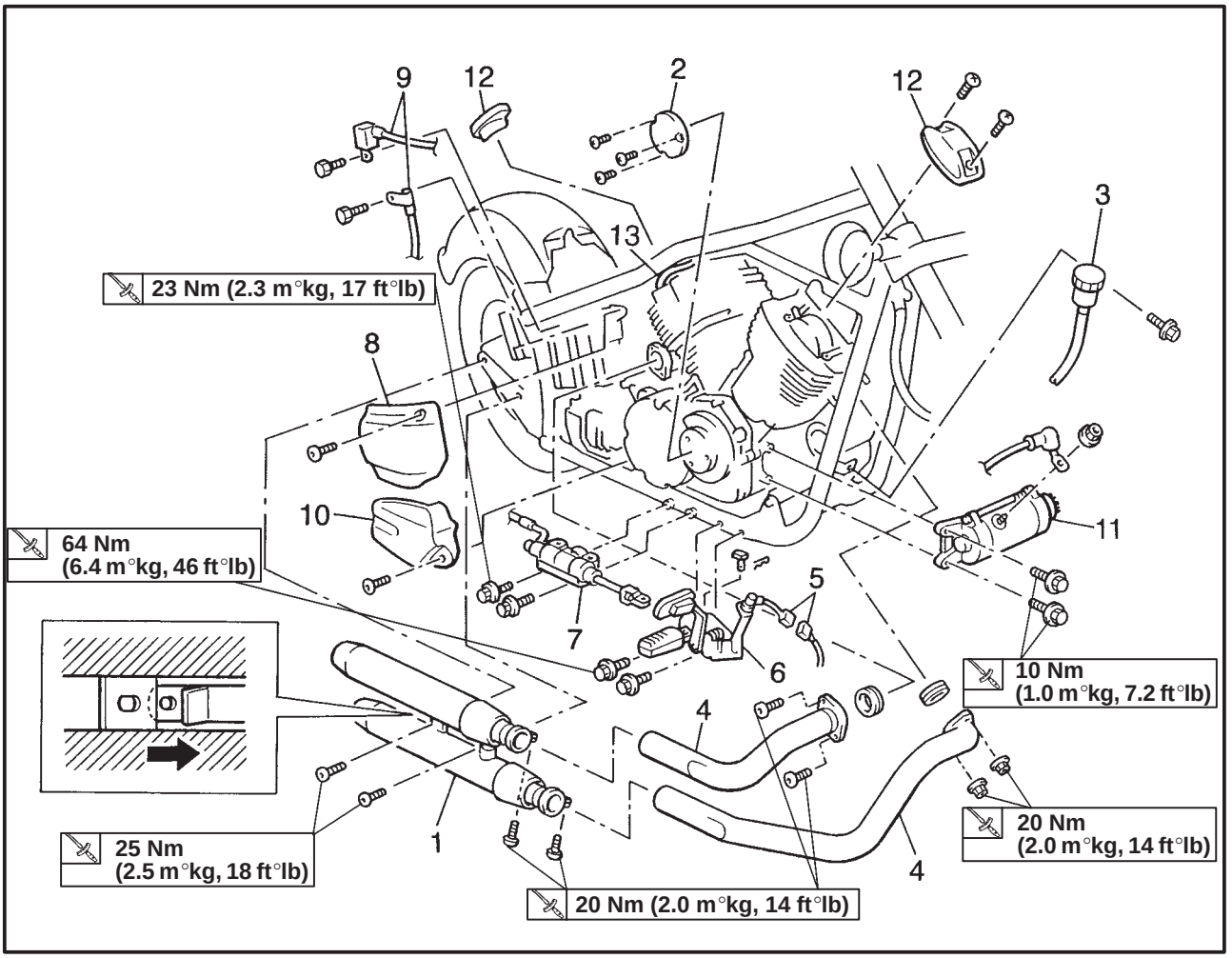

Order	Job name/Part name	Q'ty	Remarks
	Removing the muffler, brake pedal and side cover		Remove the parts in the order listed. Stand the motorcycle on a level surface. **⚠ WARNING** **Securely support the motorcycle so there is no danger of it falling over.**
	Fuel tank		Refer & "FUEL TANK AND SEATS" in Chapter 3.
	Air filter case assembly Carburetor assembly		Refer to "CARBURETOR" in Chapter 5.
1	Muffler assembly	1	
2	Cover (emblem)	1	
3	Reservoir tank	1	
4	Exhaust pipes	2	
5	Rear brake switch lead	1	Disconnect
6	Footrest/brake pedal	1/1	

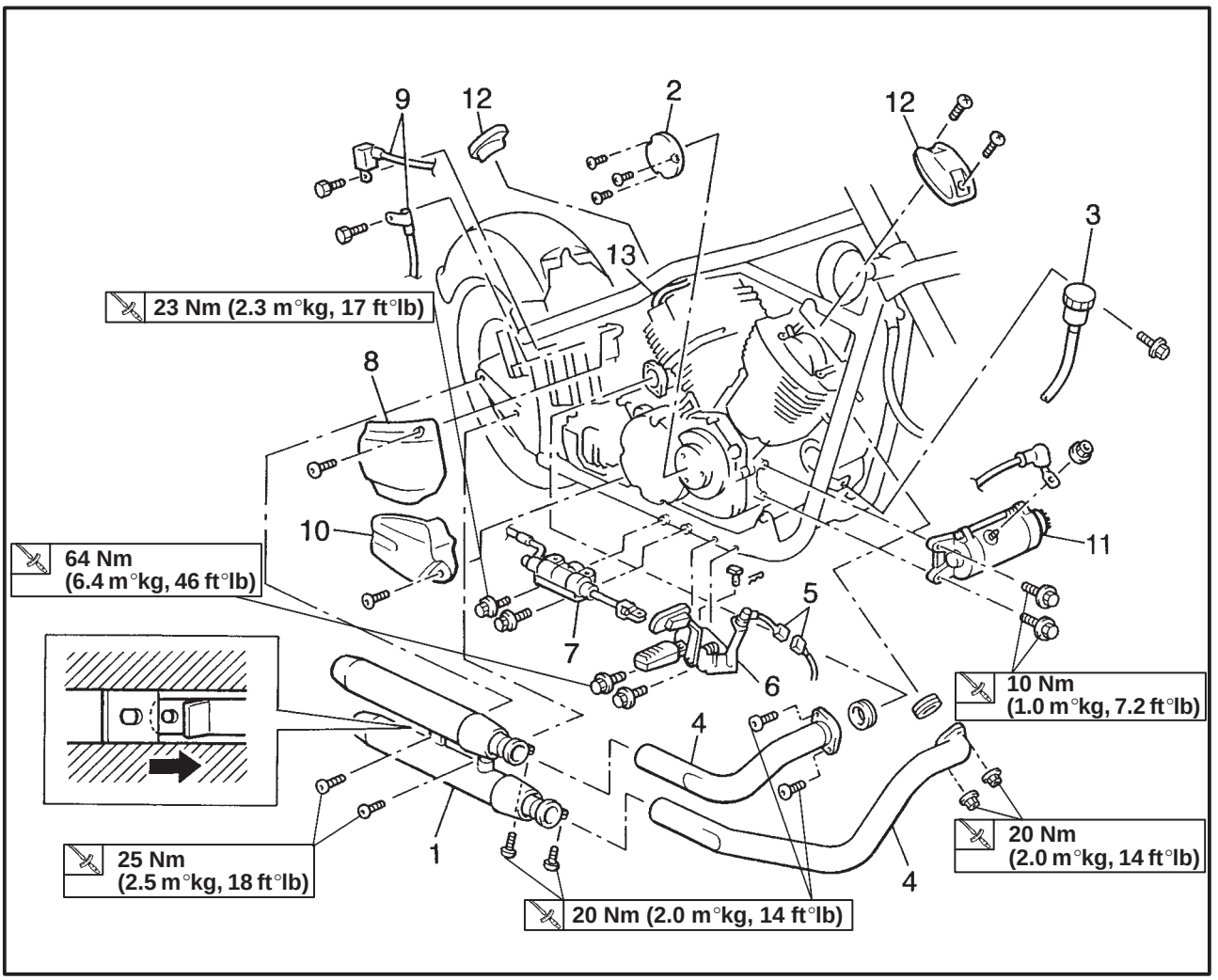

Order	Job name/Part name	Q'ty	Remarks
7	Rear brake master cylinder/bracket	1/1	
8	Battery cover	1	
9	Battery leads	2	Disconnect **NOTE:** First, disconnect the negative lead, then disconnect the positive lead.
10	Right side cover	1	
11	Starter motor	1	Disconnect
12	Cylinder head covers	4	
13	Spark plug caps	2	
			For installation, reverse the removal procedure

LEADS, SHIFT PEDL AND CLUTCH CABLE

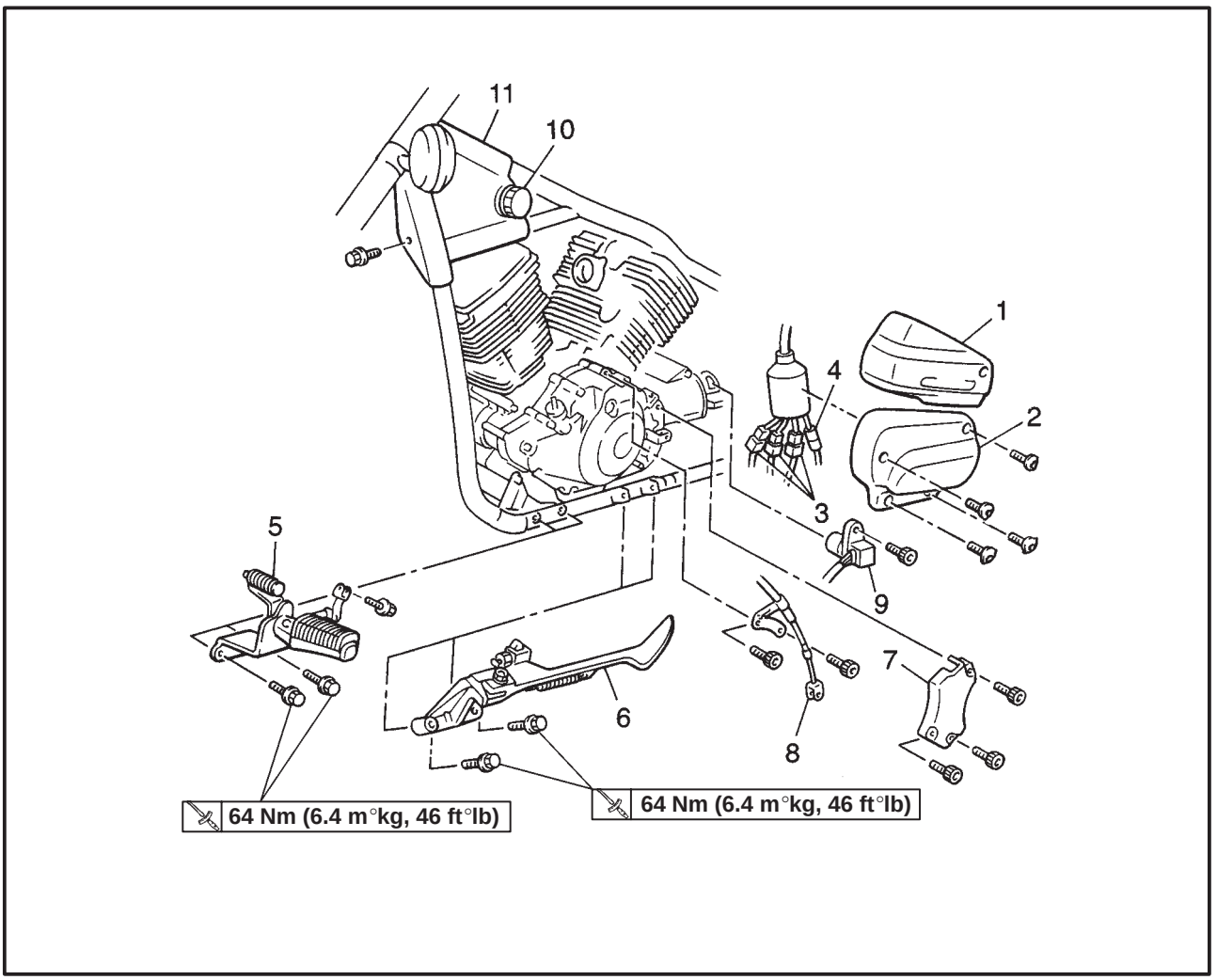

Order	Job name/Part name	Q'ty	Remarks
	Removing the leads, shift pedal and clutch cable		Remove the parts in the order listed.
1	Tool box cover	1	
2	Left side cover	1	
3	AC magneto lead/pickup lead/side stand switch lead/speed sensor lead	1/1/1	Disconnect
4	Neutral switch lead	1	Disconnect
5	Footrest/shift pedal	1/1	Refer to "INSTALLING THE ENGINE".
6	Sidestand	1	
7	Clutch adjusting cover	1	
8	Clutch cable	1	Disconnect
9	Speed sensor	1	
10	Fuel tank fitting knobs	2	
11	Steering head side covers	2	
			For installation, reverse the removal procedure.

ENGINE MOUNTING BOLTS

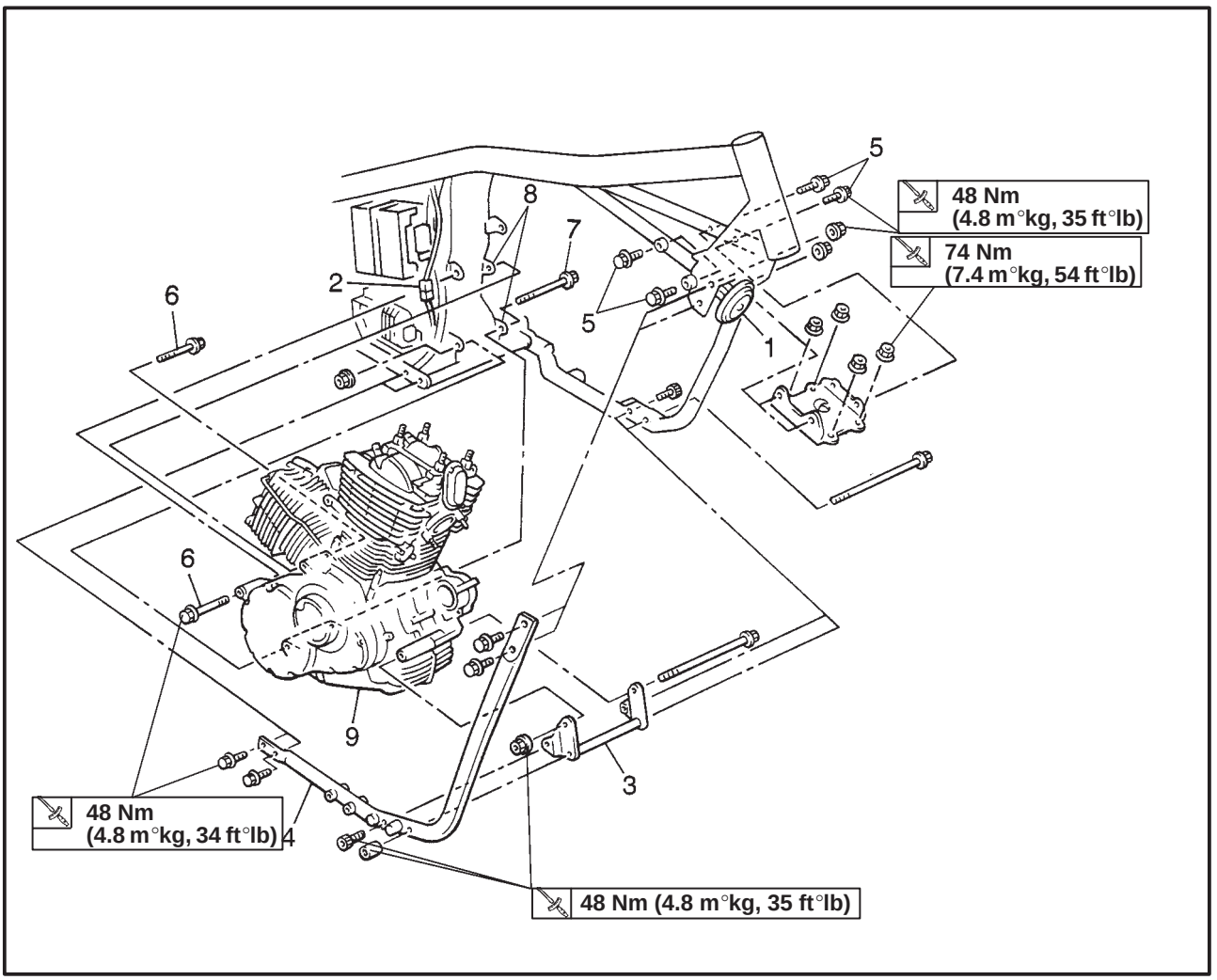

Order	Job name/Part name	Q'ty	Remarks
	Engine mounting bolt removal		Remove the parts in the order below.
			Place a suitable stand under the frame and engine.
	Left crankcase cover		Refer to "GENERATOR AND STARTER CLUTCH"
	Tool box		Refer to "REAR SHOCK ABSORBER AND SWINGARM" in Chapter 6.
1	Horn	1	
2	Engine ground lead connector	1	
3	Engine stay (front-lower)	1	
4	Down tube	1	
5	Engine bracket bolts	4	
6	Engine mount bolts (rear upper)	2	Refer to "INSTALLING THE ENGINE".
7	Engine mount bolt (rear lower)	1	
8	Engine stays (rear upper/lower)	1/1	
9	Engine assembly	1	
			For installation, reverse the removal procedure.

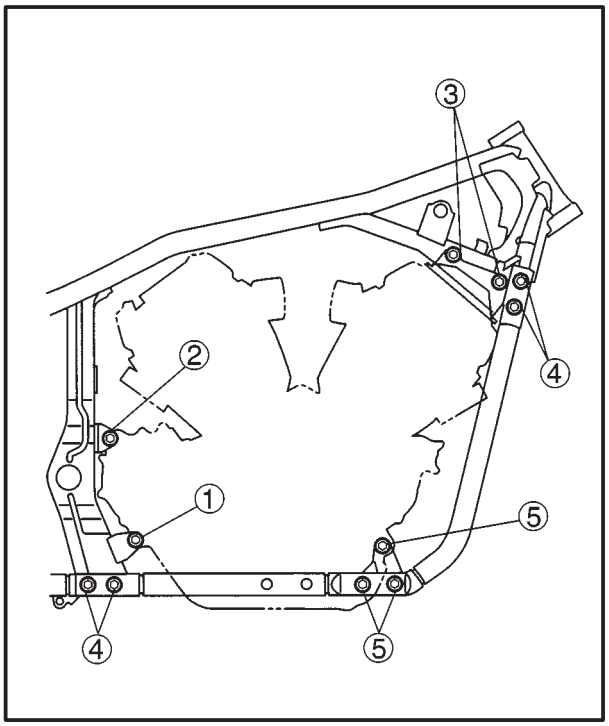

EAS00192

INSTALLING THE ENGINE

1. Tighten the bolts in the following order.

Bolt ①:
48 Nm (4.8 m°kg, 35 ft°lb)
Bolt ②:
48 Nm (4.8 m°kg, 35 ft°lb)
Bolt ③:
48 Nm (4.8 m°kg, 35 ft°lb)
Bolt ④:
48 Nm (4.8 m°kg, 35 ft°lb)
Bolt ⑤:
48 Nm (4.8 m°kg, 35 ft°lb)

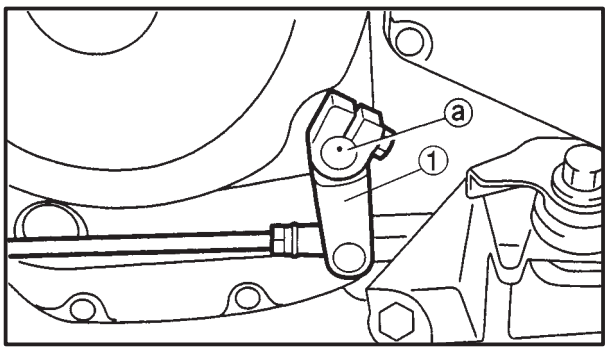

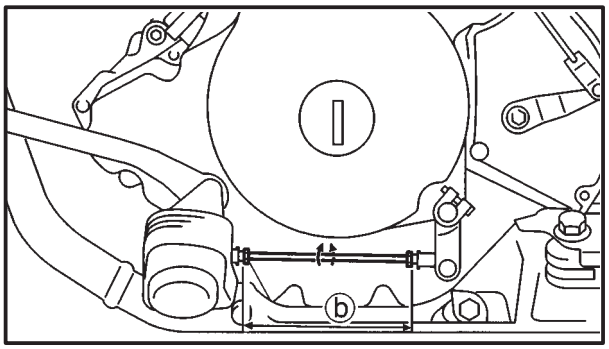

2. Install:
   - shift arm ①

NOTE:

- Align the punch mark ⓐ in the shift shaft with the slot in the shift arm.
- Adjust the adjusting bolt length ⓑ.

Refer to “ADJUSTING THE SHIFT PEDAL” in chapter 3.

Shift arm bolt
10 Nm (1.0 m°kg, 7.2 ft°lb)

Adjusting bolt length
114.7 mm (4.52 in)

CYLINDER HEADS
REAR CYLINDER HEAD

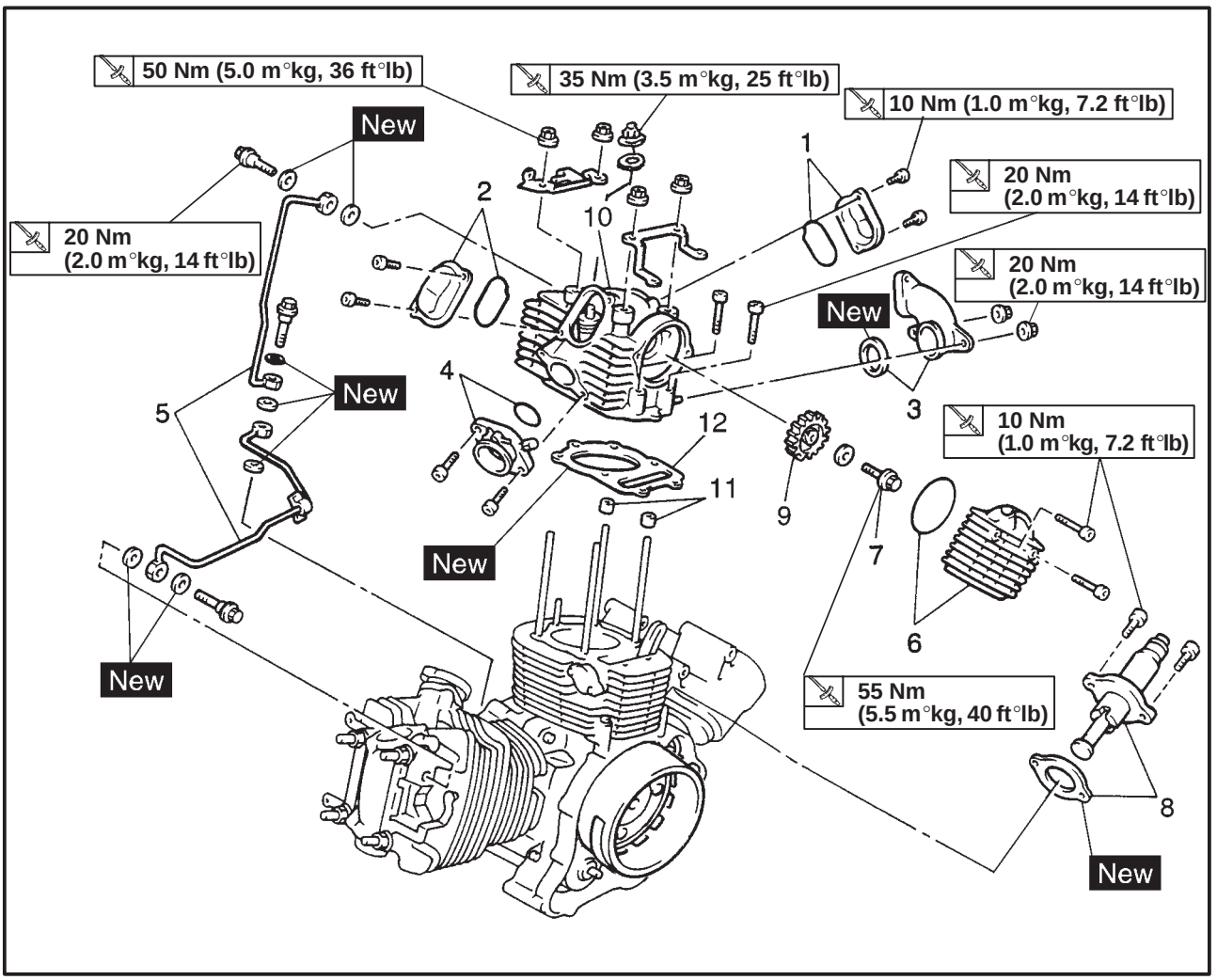

Order	Job name/Part name	Q'ty	Remarks
	Cylinder head removal Engine assembly Left crankcase cover		Remove the parts in the order listed. Refer to "ENGINE REMOVAL". Refer to "GENERATOR AND STARTER CLUTCH".
1	Tappet cover (exhaust)/O-ring	1/1	
2	Tappet cover (intake)/O-ring	1/1	
3	Exhaust pipe joint/gasket	1/1	
4	Carburetor joint/O-ring	1/1	
5	Oil delivery pipes	2	
6	Camshaft sprocket cover/O-ring	1/1	Refer to "INSTALLING THE CYLINDER HEADS".
7	Camshaft sprocket bolt	1	

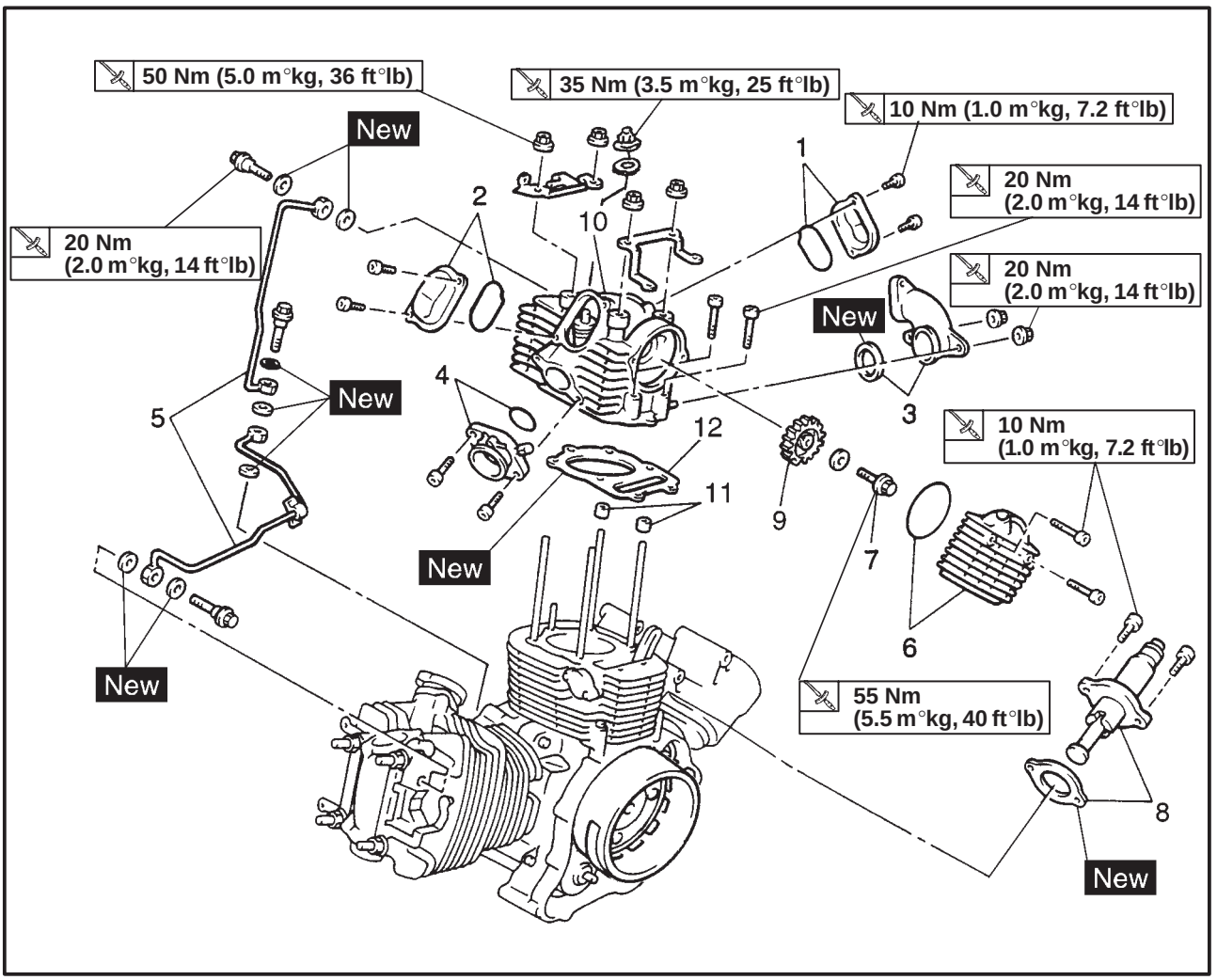

Order	Job name/Part name	Q'ty	Remarks
8	Timing chain tensioner/gasket	1/1	Refer to "REMOVING/INSTALLING THE CYLINDER HEADS".
9	Camshaft sprocket	1	
10	Cylinder head	1	
11	Dowel pins	2	Refer to "INSTALLING THE CYLINDER HEADS".
12	Cylinder head gasket	1	
			For installation, reverse the removal procedure.

FRONT CYLINDER HEAD

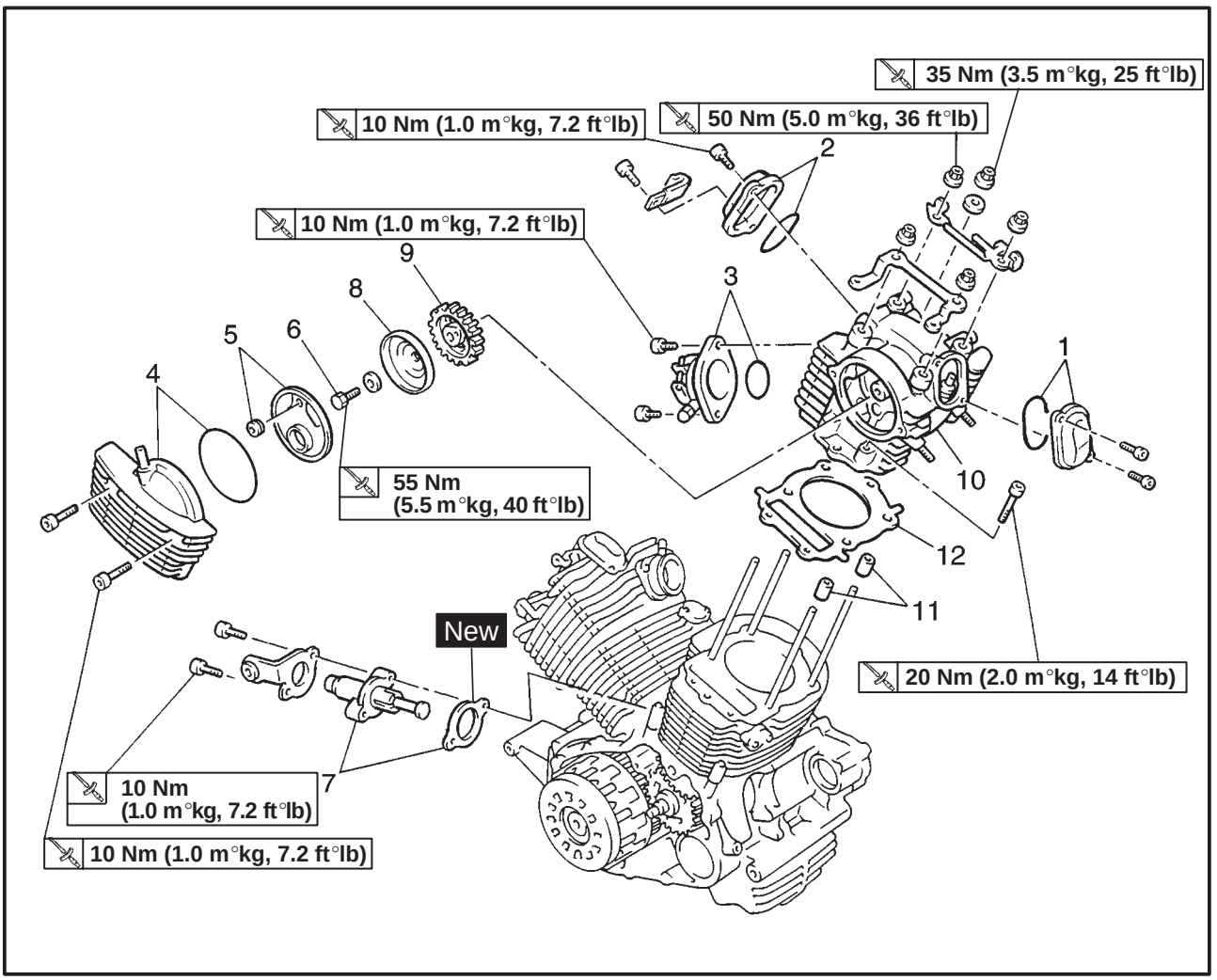

Order	Job name/Part name	Q'ty	Remarks
	Cylinder head removal		Remove the parts in the order listed.
	Engine assembly		Refer to "ENGINE REMOVAL".
	Oil delivery pipes		Refer to "REAR CYLINDER HEAD".
	Right crankcase cover		Refer to "CLUTCH".
1	Tappet cover (exhaust)/O-ring	1/1	
2	Tappet cover (intake)/O-ring	1/1	
3	Carburetor joint/O-ring	1/1	
4	Camshaft sprocket cover/O-ring	1/1	Refer to "INSTALLING THE CYLINDER HEADS".
5	Baffle plate/O-ring	1/1	
6	Camshaft sprocket bolt	1	

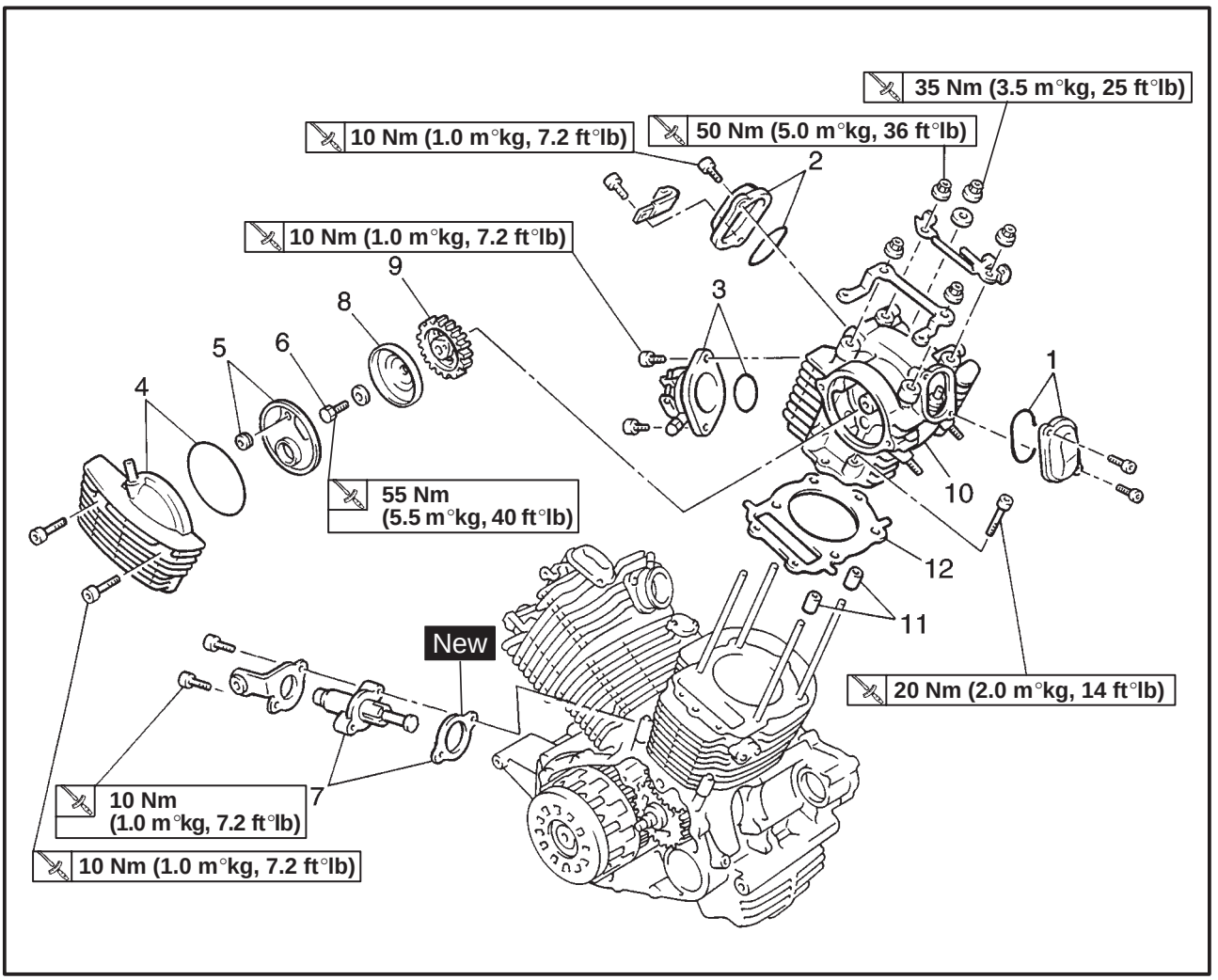

Order	Job name/Part name	Q'ty	Remarks
7	Timing chain tensioner/gasket	1/1	Refer to "REMOVING/INSTALLING THE CYLINDER HEADS".
8	Camshaft sprocket plate	1	
9	Camshaft sprocket	1	
10	Cylinder head	1	
11	Dowel pins	2	Refer to "INSTALLING THE CYLINDER HEADS".
12	Cylinder head gasket	1	
			For installationreverse the removal procedure.

EAS00226

REMOVING THE CYLINDER HEADS

Rear cylinder head

1. Remove:
   - camshaft sprocket cover
   - tappet covers

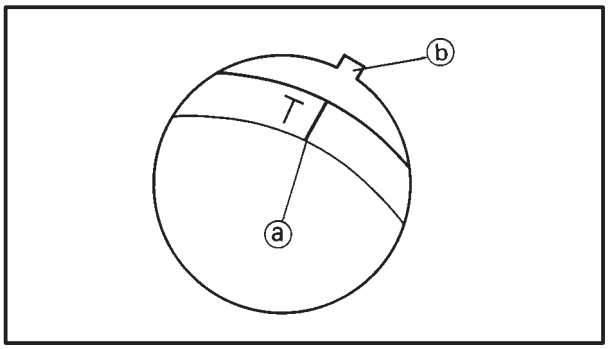

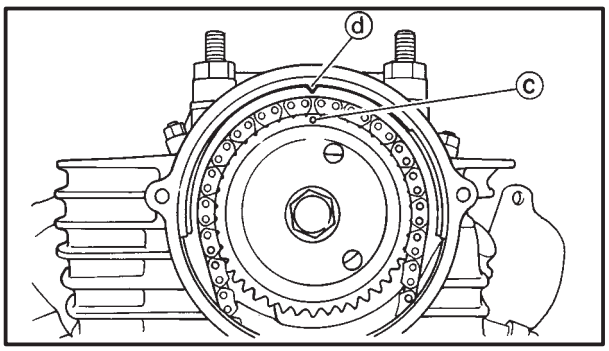

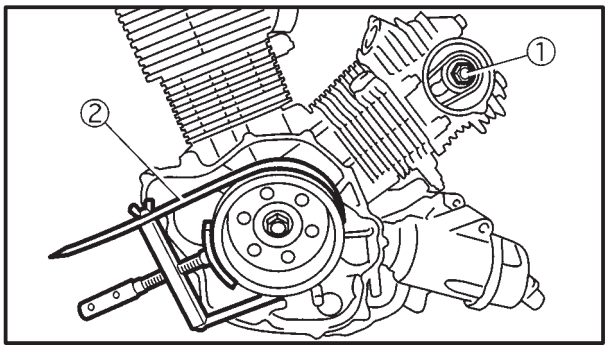

2. Align:
   - "T" mark ⓐ (with the stationary pointer ⓑ)

▼▼▼▼▼▼▼▼▼▼▼▼▼▼▼▼▼▼▼▼▼▼▼▼▼▼▼▼▼▼▼▼

a. Temporarily install the left crankcase cover without the pickup coil and stator coil.
b. Turn the crankshaft clockwise.
c. Align the "T" mark ⓐ with the stationary pointer ⓑ on the crankcase cover (left) when the rear piston is at TDC on the compression stroke.
d. Check that the rear piston is at TDC in the compression stroke.
e. The rear piston is at TDC on the compression stroke when there is clearance at both of the rocker arms. If there is no clearance then turn the crankshaft clockwise one full turn.
f. When to "T" mark is aligned with the stationary pointer the punch mark ⓒ on the camshaft sprocket should be aligned with the stationary pointer ⓓ on the cylinder head.

▲▲▲▲▲▲▲▲▲▲▲▲▲▲▲▲▲▲▲▲▲▲▲▲▲▲▲▲▲▲▲▲

3. Loosen:
   - bolt (camshaft sprocket) ①

NOTE:

Use the sheave holder ② to hold the rotor.

	Sheave holder: **YS-01880, 90890-01701**

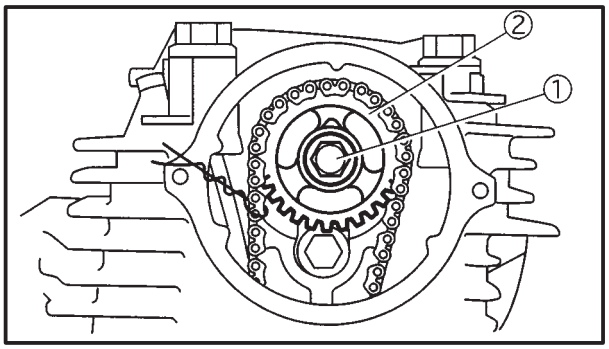

4. Remove:
   - timing chain tensioner
   - gasket
5. Remove:
   - bolt (camshaft sprocket) ①
   - camshaft sprocket ②

NOTE:

To prevent the timing chain from falling into the crankcase fasten a wire to it.

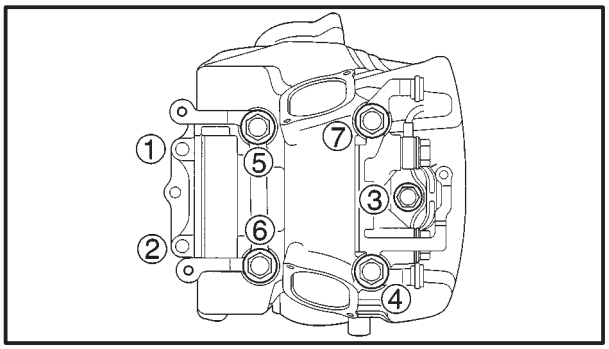

6. Remove:
   - cylinder head

NOTE:

- Loosen the bolts and nuts in the proper sequence.
- Follow the numerical order shown in the illustration. Loosen each bolt 1/4 of a turn at a time until all of the bolts are loose.

Front cylinder head

NOTE:

When removing the front cylinder head, repeat the rear cylinder head removal procedures. However, note the following points.

1. Align:
   - "I" mark
     (with the stationary pointer)

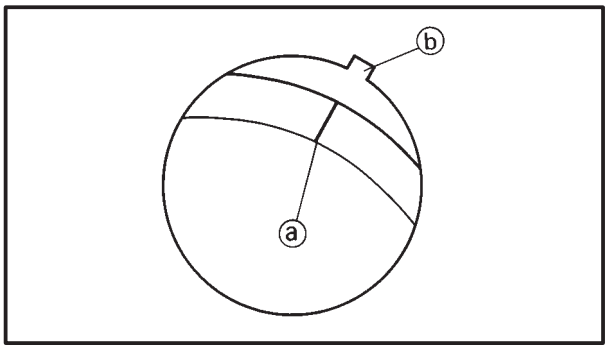

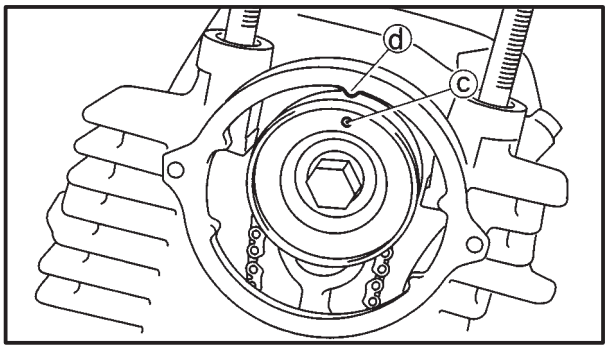

Removal steps:

- Turn the crankshaft clockwise 290°.
- Align the "I" mark ⓐ with the stationary pointer ⓑ on the crankcase cover (left) when the front piston is at TDC on the compression stroke.
- When the "I" mark is aligned with the stationary pointer the punch mark ⓒ on the camshaft sprocket should be aligned with the stationary pointer ⓓ on the cylinder head.
- The front piston is at TDC on the compression stroke when there is clearance at both of the rocker arms.

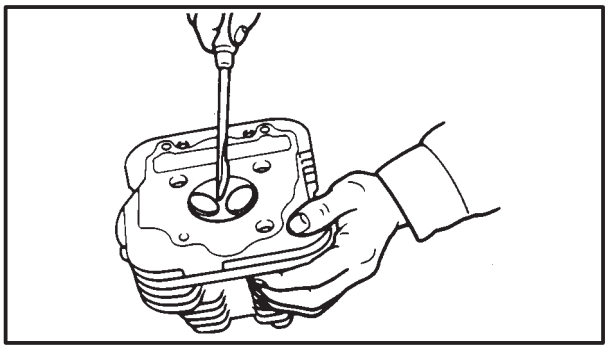

EAS00228

CHECKING THE CYLINDER HEADS

The following procedure applies to all of the cylinder heads.

1. Eliminate:
   - °combustion chamber carbon deposits (with a rounded scraper)

NOTE:

Do not use a sharp instrument to avoid damaging or scratching:
- °spark plug threads
- °valve seats

2. Check:
   - °cylinder head
     Damage/scratches → Replace.
3. Measure:
   - °cylinder head warpage
     Out of specification → Resurface the cylinder head.

	Cylinder head warpage **Less than 0.03 mm (0.0012 in)**

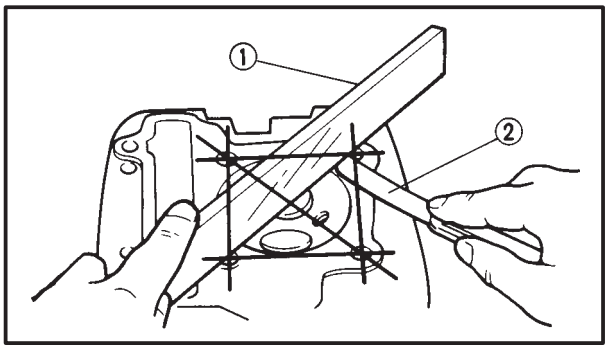

a. Place a straightedge ① and a thickness gauge ② across the cylinder head.
b. Measure the warpage.
c. If the limited is exceeded, resurface the cylinder head as follows.
d. Place 400 – 600 grit wet sandpaper on the surface plate and resurface the cylinder head using a figure-eight sanding pattern.

NOTE:

To ensure an even surface, rotate the cylinder head several times.

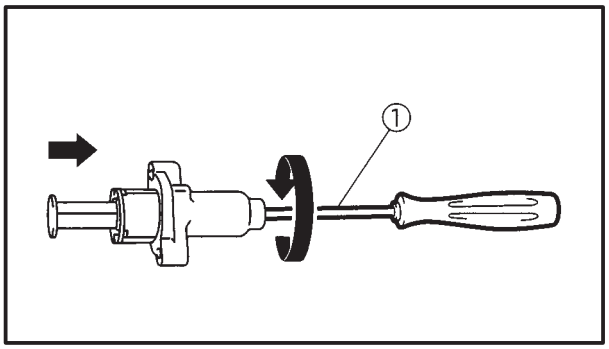

EB401430

CHECKING THE TIMING CHAIN TENSIONER

1. Check:
   - timing chain tensioner
     Cracks/damage/rough movement → Replace.

▼▼▼▼▼▼▼▼▼▼▼▼▼▼▼▼▼▼▼▼▼▼▼▼▼▼▼▼▼▼▼▼

a. Lightly press the timing chain tensioner rod into the timing chain tensioner housing by hand.

NOTE:

While pressing the timing chain tensioner rod, wind it clockwise with a thin screwdriver ① until it stops.

b. Remove the screwdriver and slowly release the timing chain tensioner rod.
c. Make sure that the timing chain tensioner rod comes out of the timing chain tensioner housing smoothly. If there is rough movement, replace the timing chain tensioner.

▲▲▲▲▲▲▲▲▲▲▲▲▲▲▲▲▲▲▲▲▲▲▲▲▲▲▲▲▲▲▲▲

EAS00234

INSTALLING THE CYLINDER HEADS

Rear cylinder head

1. Install:
   - dowel pins
   - gasket

NOTE:

The “5EL” mark on the gasket must face up side of the cylinder.

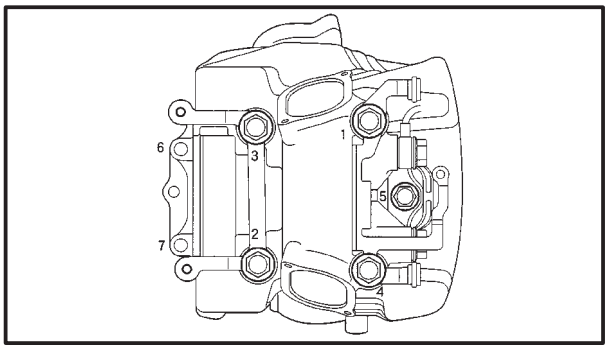

2. Install:
   - nuts (cylinder head) (M12: 1 – 4)
     50 Nm (5.0 m°kg, 3.6 ft°lb)
   - cap nut (cylinder head) (M10: 5)
     35 Nm (3.5 m°kg, 25 ft°lb)
   - bolts (cylinder head) (M8: 6 – 7)
     20 Nm (2.0 m°kg, 14 ft°lb)

NOTE:

- Tighten the bolts and nuts in the proper sequence.
- Follow the numerical order shown in the illustration. Tighten the bolts and nuts in two stages.

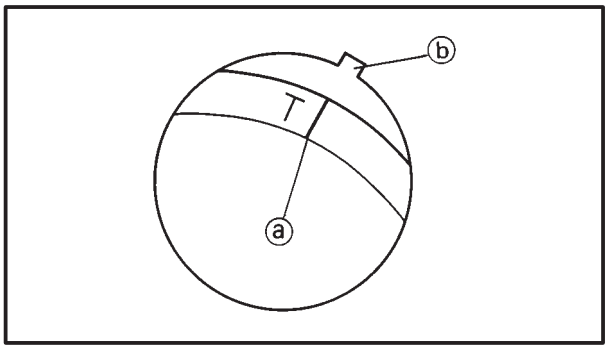

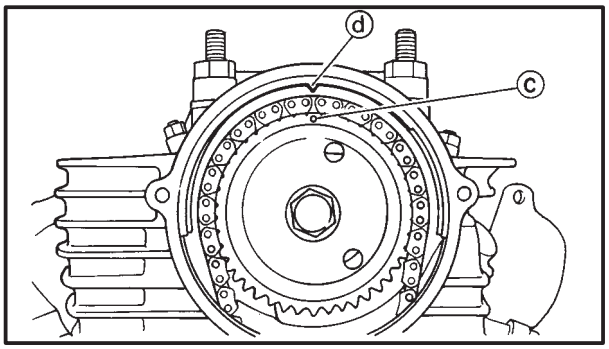

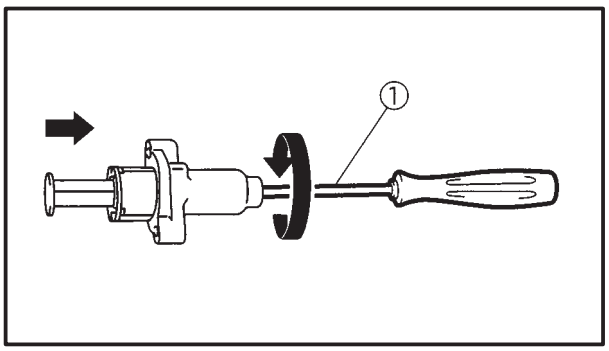

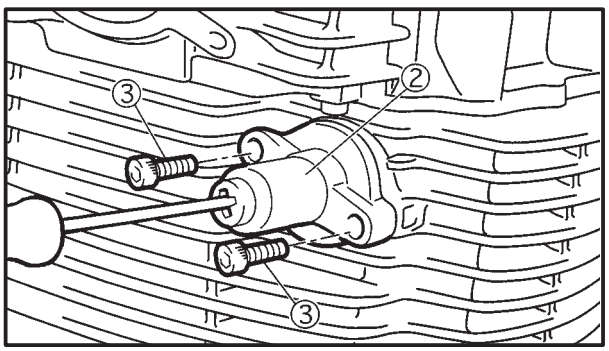

3. Install:
   °camshaft sprocket

▼▼▼▼▼▼▼▼▼▼▼▼▼▼▼▼▼▼▼▼▼▼▼▼▼▼▼▼▼▼▼▼

a. Temporarily install the rotor nut and left crankcase cover without the pickup coil and stator coil.
b. Turn the crankshaft clockwise.
c. Align the “T” mark ⓐ with the stationary pointer ⓑ on the crankcase cover (left).
d. Install the camshaft sprocket with the timing mark ⓒ facing out.
e. Turn the camshaft just enough to remove any slack from the intake side of the timing chain.
f. Insert your finger into the hole and timing chain tensioner hole and push the timing chain guide inward.
g. While pushing the timing chain guide, be sure that the timing mark ⓒ and the stationary pointer ⓓ are properly aligned at TDC.

▲▲▲▲▲▲▲▲▲▲▲▲▲▲▲▲▲▲▲▲▲▲▲▲▲▲▲▲▲▲▲▲

4. Install:
   °timing chain tensioner

▼▼▼▼▼▼▼▼▼▼▼▼▼▼▼▼▼▼▼▼▼▼▼▼▼▼▼▼▼▼▼▼

a. Lightly press the timing chain tensioner rod into the timing chain tensioner housing by hand.
b. While pressing the timing chain tensioner rod, wind it clockwise with a thin screwdriver ① until it stops.
c. With the screwdriver still inserted into the timing chain tensioner, install the timing chain tensioner ②, and gasket.
   Then, tighten the timing chain tensioner bolts ③ to the specified torque.

⚠ WARNING

Always use a new gasket.

NOTE:

The “UP” mark on the timing chain tensioner should face up.

	Timing chain tensioner bolt **10 Nm (1.0 m°kg, 7.2 ft°lb)**

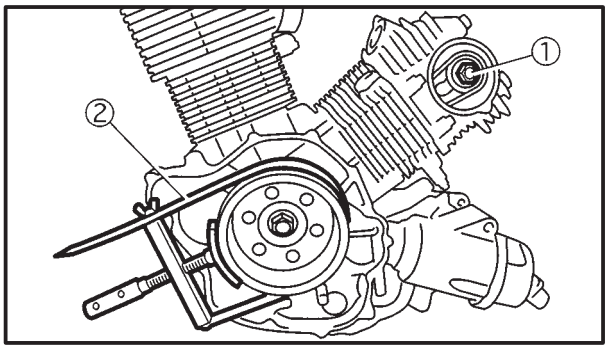

d. Remove the screwdriver, make sure that the timing chain tensioner rod releases, and tighten the cap bolt to the specified torque.

	Cap bolt **8 Nm (0.8 m°kg, 5.8 ft°lb)**

5. Install:
   °bolt (camshaft sprocket) ①

55 Nm (5.5 m°kg, 40 ft°lb)

NOTE:

°Be sure the projection on the camshaft sprocket plate is aligned with the hole in the sprocket.
°Use the sheave holder ② to hold the rotor.

	Sheave holder: **YS-01880, 90890-01701**

6. Check:
   °alignment marks
   If the marks do not align → Adjust.
7. Measure:
   °valve clearance
   Out of specification → Adjust.
   Refer to “ADJUSTING THE VALVE CLEARANCE” in CHAPTER 3.

Front cylinder head

NOTE:

When installing the front cylinder head, repeat the rear cylinder head installation procedure. However, note the following points.

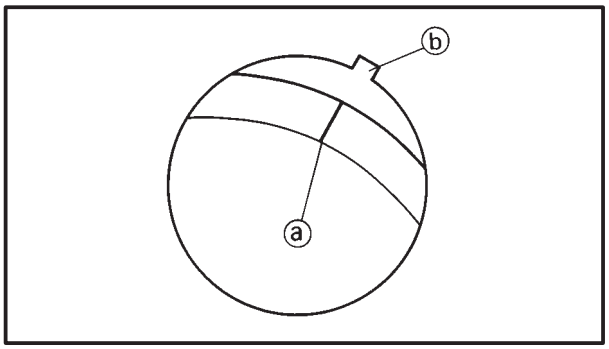

1. Install:
   °camshaft sprocket

a. Turn the crankshaft clockwise 290°.
b. Align the “I” mark ⓐ with the stationary pointer ⓑ on the crankcase cover (left).
c. Install the camshaft sprocket with the timing mark ⓒ facing out.
d. Turn the camshaft just enough to remove any slack from the intake side of the timing chain.
e. Insert your finger into the hole and timing chain tensioner hole and push the timing chain guide inward.
f. While pushing the timing chain guide, be sure that the timing mark ⓒ and the stationary pointer ⓓ are properly aligned at TDC.

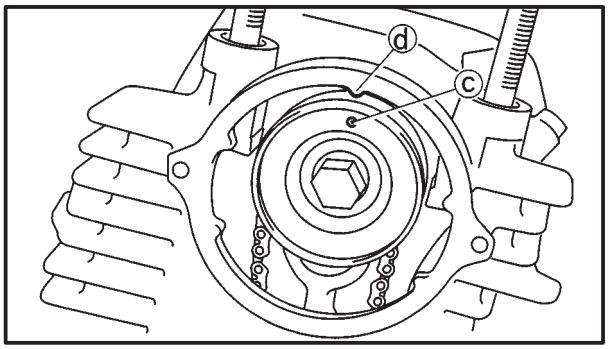

ROCKER ARMS AND CAMSHAFT

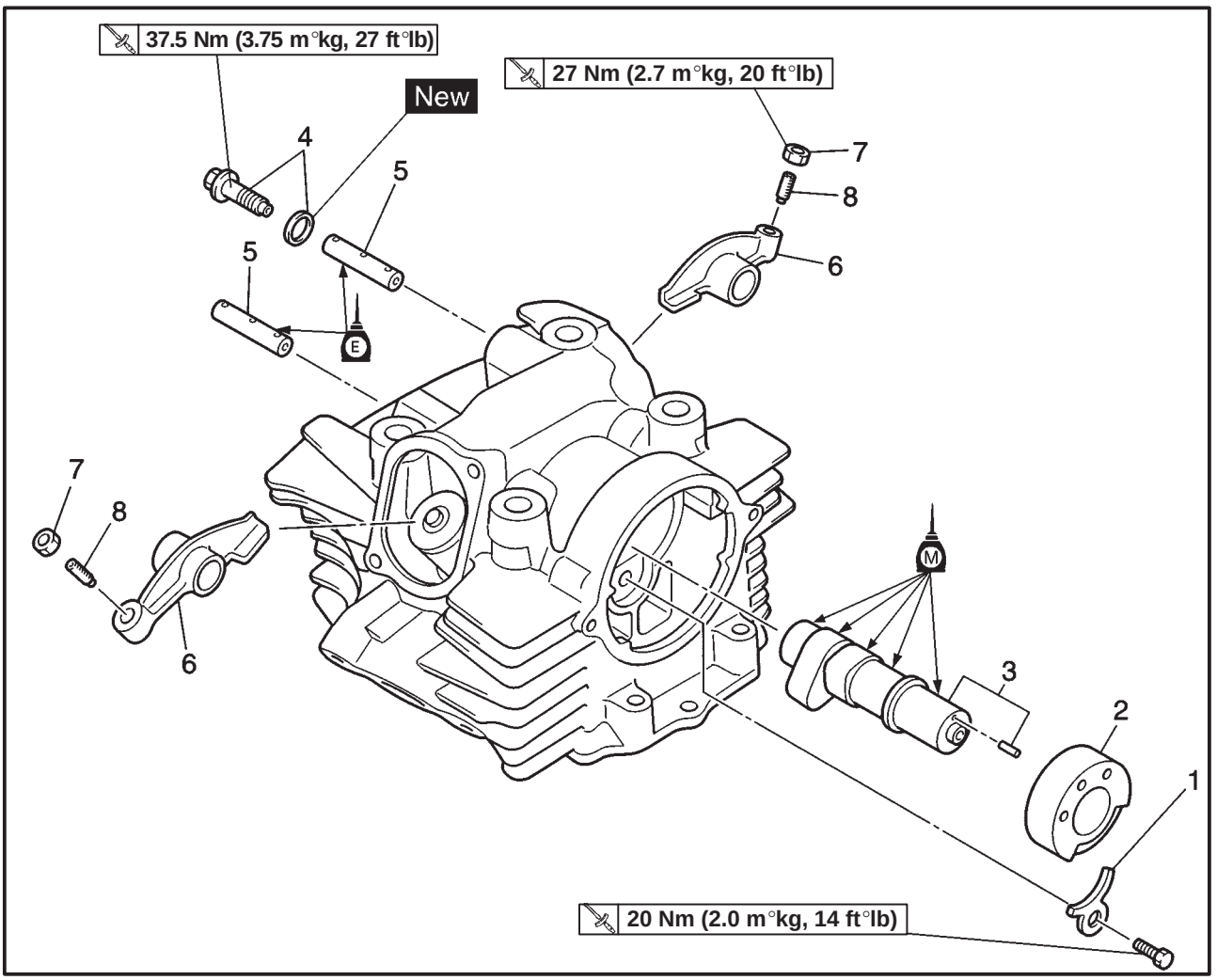

Order	Job name/Part name	Q'ty	Remarks
	Removing the rocker arm and camshaft		Remove the parts in the order listed.
	Cylinder heads		Refer to "CYLINDER HEAD".
1	Stopper plate	1	
2	Camshaft bushing	1	Refer to "REMOVING/INSTALLING THE ROCKER ARM AND CAMSHAFT".
3	Camshaft/dowel pin	1/1	
4	Union bolt/gasket	1/1	
5	Rocker arm shafts	2	Refer to "REMOVING/INSTALLING THE ROCKER ARM AND CAMSHAFT".
6	Rocker arms	2	
7	Locknuts	2	
8	Valve adjusters	2	
			For installation, reverse the removal procedure.

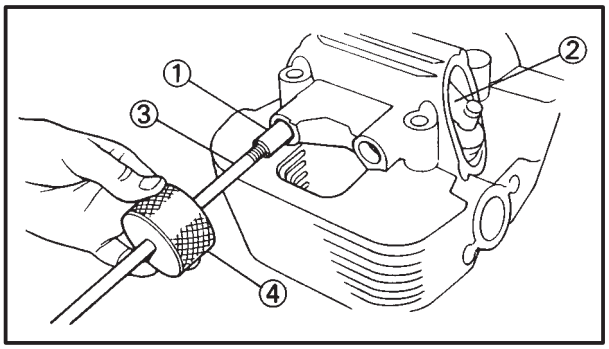

EAS00202

REMOVING THE ROCKER ARMS AND CAMSHAFT

1. Remove:
   - rocker arm shafts (intake and exhaust) ①
   - rocker arms ②

NOTE:

Use a slide hammer ③ and weight ④ to remove the rocker arm shafts.

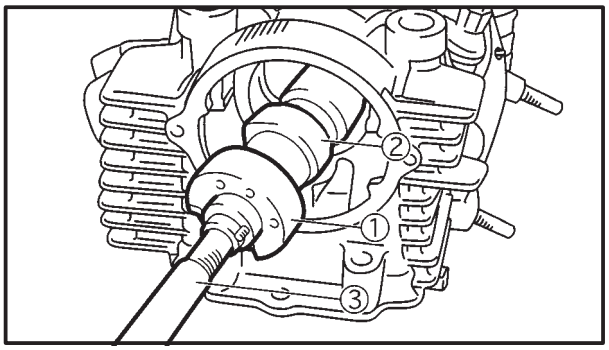

Slide hammer bolt (M8):
YU-1083-2, 90890-01085
Weight:
YU-1083-3, 90890-01084

2. Remove:
   - camshaft bushing ①
   - camshaft ②

NOTE:

Screw a 10 mm (0.39 in) bolt ③ into the threaded end of the camshaft and pull out the camshaft.

EAS00205

CHECKING THE CAMSHAFTS

1. Check:
   - camshaft bushings
     Damage/wear → Replace.
2. Check:
   - camshaft lobes
     Blue discoloration/pitting/scratches → Replace the camshaft.
3. Measure:
   - camshaft lobe dimensions ⓐ and ⓑ
     Out of specification → Replace the camshaft.

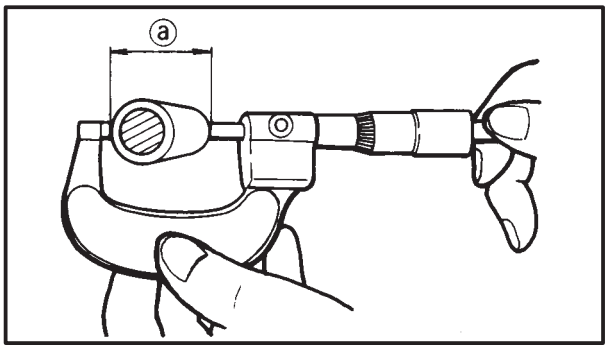

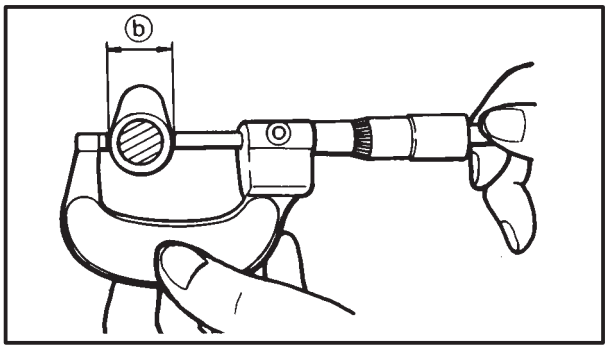

Camshaft lobe dimension limit
Intake
ⓐ 39.012 mm (1.5359 in)
ⓑ #1: 31.993 mm (1.2596 in)
#2: 32.027 mm (1.2609 in)
Exhaust
ⓐ 39.045 mm (1.5372 in)
ⓑ 32.100 mm (1.2638 in)

4. Check:
   - camshaft oil passage
     Obstruction → Blow out with compressed air.

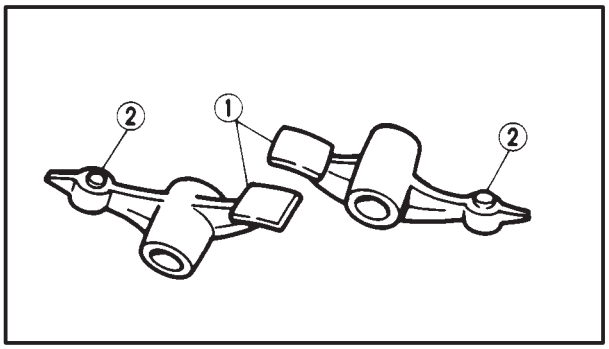

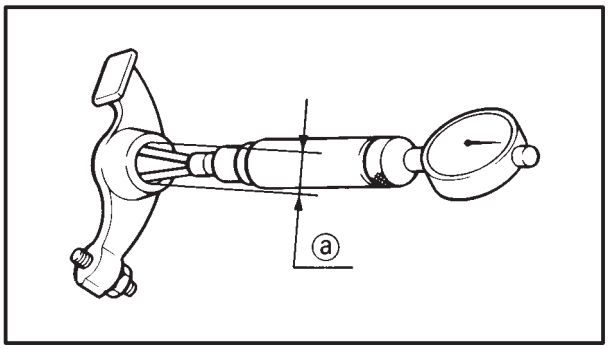

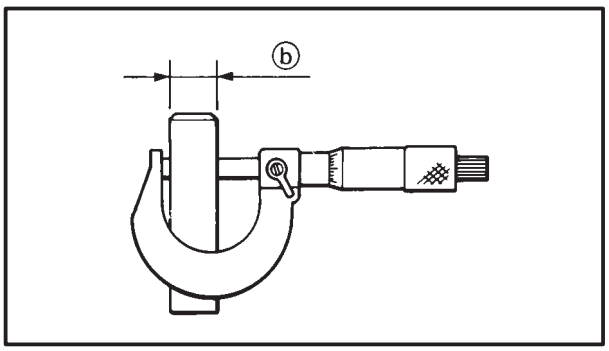

EB401410

CHECKING THE ROCKER ARMS AND ROCKER ARM SHAFTS

The following procedure applies to all of the rocker arms and rocker arm shafts.

1. Check:
   - rocker arm
     Damage/wear → Replace.
   - rocker arm lobe ①
   - valve adjuster ②
     Excessive wear → Replace.
2. Check:
   - rocker arm shaft
     Blue discoloration/excessive wear/pitting/scratches → Replace or check the lubrication system.
3. Measure:
   - rocker arm inside diameter ⓐ
     Out of specification → Replace.

Rocker arm inside diameter
<Limit> : 14.036 mm (0.5526 in)

4. Measure:
   - rocker arm shaft outside diameter ⓑ
     Out of specification → Replace.

Rocker arm shaft outside diameter
<Limit> : 13.95 mm (0.5492 in)

5. Calculate:
   - rocker-arm-to-rocker-arm-shaft clearance

NOTE:

Calculate the clearance by subtracting the rocker arm shaft outside diameter from the rocker arm inside diameter.

Above 0.086 mm (0.0034 in) → Replace the defective part(-s).

Rocker-arm-to-rocker-arm-shaft clearance
0.009 √ 0.033 mm
(0.0006 √ 0.0013 in)
<Limit> : 0.086 mm (0.0034 in)

EAS00220

INSTALLING THE CAMSHAFT AND ROCKER ARMS

1. Lubricate:
   °camshaft

	Recommended lubricant **Camshaft/Bushing** **Molybdenum disulfide oil**

2. Install:
   °camshaft ①
   °camshaft bushing ②

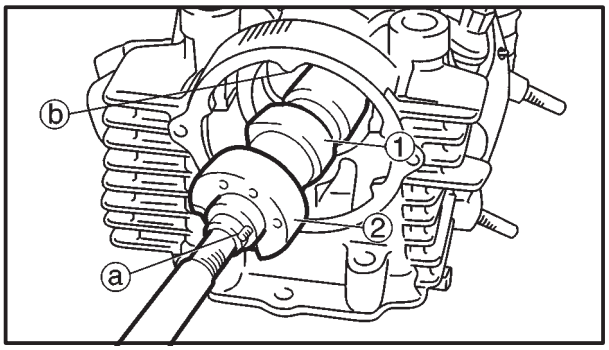

NOTE:

°The dowel pin ⓐ on the end of the camshaft must align with the timing mark ⓑ on the cylinder head.
°Make sure that the No.1 camshaft ③ is installed in the rear cylinder head and the No.2 camshaft ④ is installed in the front cylinder head.

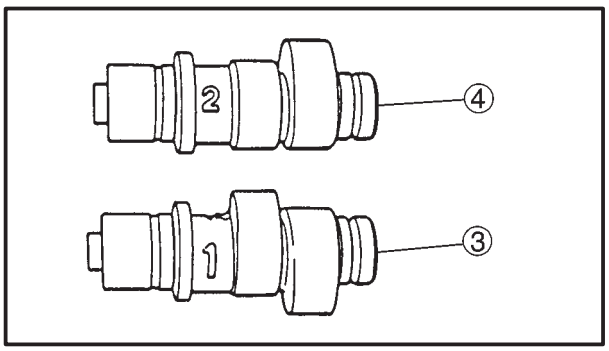

3. Install:
   °stopper plate ①

	Stopper plate bolt ② **20 Nm (2.0 m°kg, 14 ft°lb)**

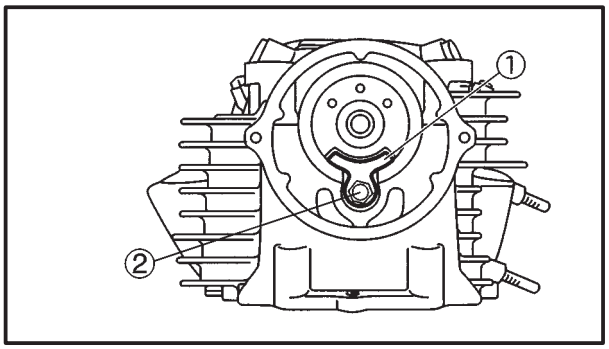

4. Lubricate:
   °rocker arm shafts

	Recommended lubricant **Engine oil**

5. Install:
   - rocker arms
   - rocker arm shafts

NOTE:

Make sure that the rocker arm shafts is completely pushed into the cylinder head.

VALVES AND VALVE SPRINGS

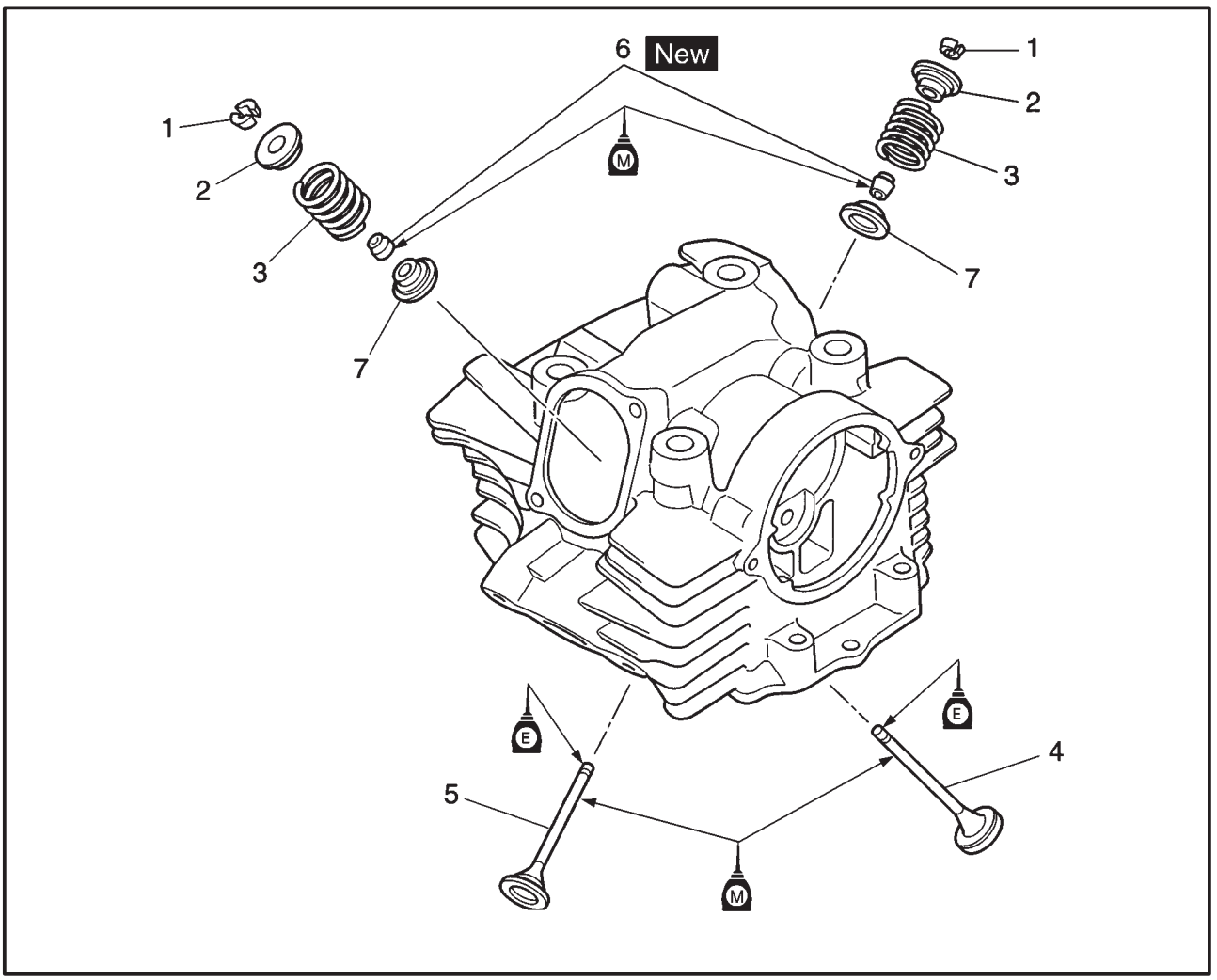

Order	Job name/Part name	Q'ty	Remarks
	Removing the valves and valve springs.		Remove the parts in the order listed.
	Cylinder heads		Refer to "CYLINDER HEADS".
	Rocker arms and camshafts		Refer to "ROCKER ARMS AND CAMSHAFT".
1	Valve cotters	4	Refer to "REMOVING/INSTALLING THE VALVES".
2	Valve spring retainers	2	Refer to "INSTALLING THE VALVES".
3	Valve springs	2	
4	Valve (intake)	1	
5	Valve (exhaust)	1	
6	Valve stem seals	2	
7	Valve spring seats	2	
			For installation, reverse the removal procedure.

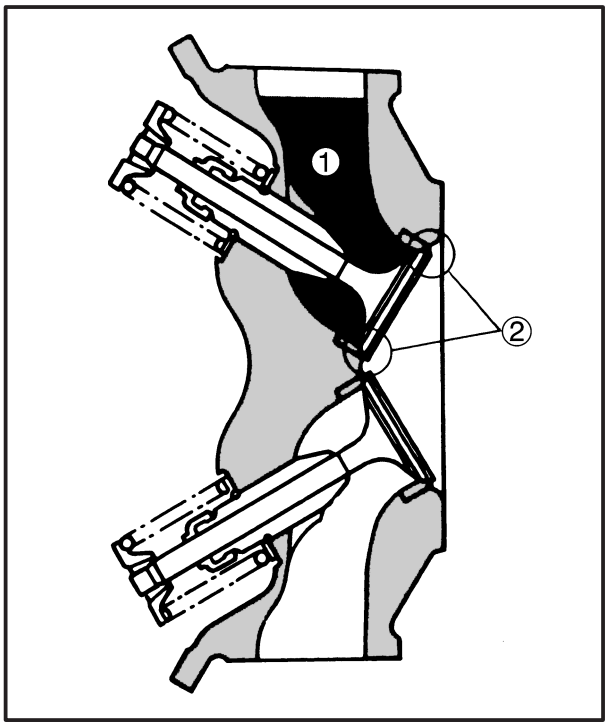

EAS00237

REMOVING THE VALVES

The following procedure applies to all of the valves and related components.

NOTE:

Before removing the internal parts of the cylinder head (e.g., valves, valve springs, valve seats), make sure that the valves properly seal.

1. Check:
   - valve sealing
     Leakage at the valve seat → Check the valve face, valve seat, and valve seat width.
     Refer to “CHECKING THE VALVE SEATS”.

▼▼▼▼▼▼▼▼▼▼▼▼▼▼▼▼▼▼▼▼▼▼▼▼▼▼▼▼▼▼▼▼▼▼

a. Pour a clean solvent ① into the intake and exhaust ports.
b. Check that the valves properly seal.
   There should be no leakage at the valve seat ②.

▲▲▲▲▲▲▲▲▲▲▲▲▲▲▲▲▲▲▲▲▲▲▲▲▲▲▲▲▲▲▲▲▲▲

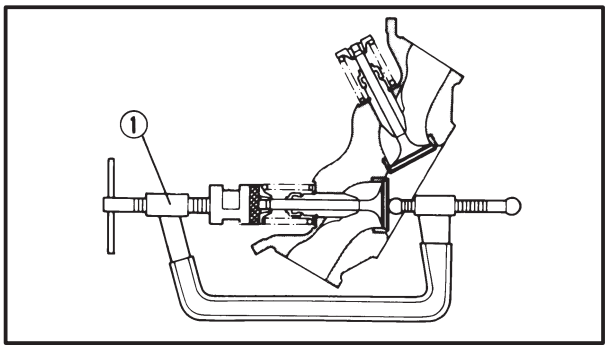

2. Remove:
   - valve cotters

NOTE:

Remove the valve cotters by compressing the valve spring with the valve spring compressor ①.

	Valve spring compressor **YM-04019, 90890-04019**

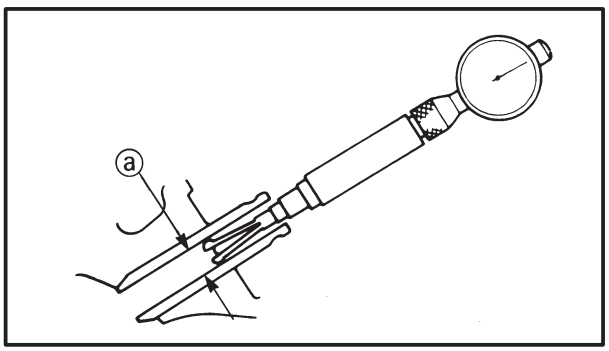

EAS00239

CHECKING THE VALVES AND VALVE GUIDES

The following procedure applies to all of the valve and valve guides.

1. Measure:
   - valve-stem-to-valve-guide clearance

Valve-stem-to-valve-guide clearance =
Valve guide inside diameter ⓐ –
Valve stem diameter ⓑ

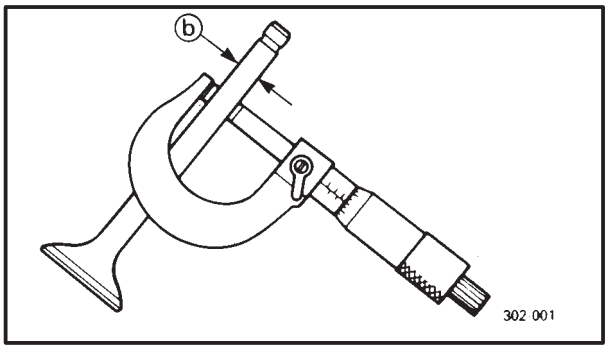

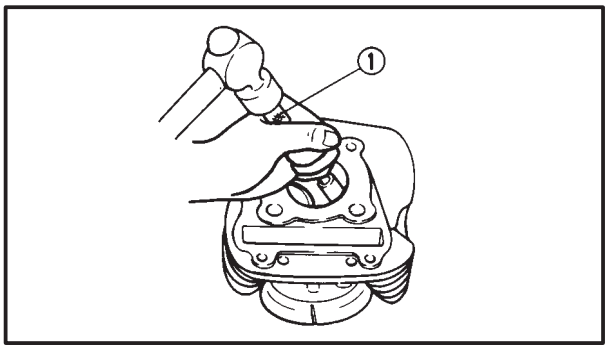

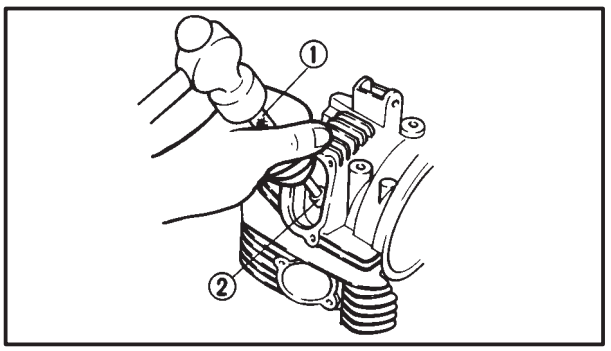

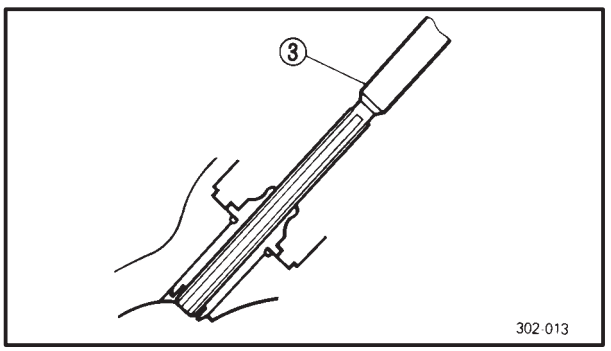

Out of specification → Replace the valve guide.

Valve-stem-to-valve-guide clearance
Intake 0.010 ~ 0.037 mm
(0.0004 ~ 0.0015 in)
<Limit>: 0.08 mm (0.0031 in)
Exhaust 0.025 ~ 0.052 mm
(0.0010 ~ 0.0020 in)
<Limit>: 0.10 mm (0.0040 in)

2. Replace.
   - valve guide

NOTE:

To ease valve guide removal and installation, and to maintain the correct fit, heat the cylinder head to 100°C (212°F) in an oven.

▼▼▼▼▼▼▼▼▼▼▼▼▼▼▼▼▼▼▼▼▼▼▼▼▼▼▼▼▼▼▼▼

a. Remove the valve guide with a valve guide remover ①.
b. Install the new valve guide with a valve guide installer ② and valve guide remover ①.
c. After installing the valve guide, bore the valve guide with a valve guide reamer ③ to obtain the proper valve-stem-to-valve-guide clearance.

NOTE:

After replacing the valve guide, reface the valve seat.

Valve guide reamer, remover and installer
8 mm (0.31 in)
Reamer YM-01211, 90890-01211
Remover YM-01200, 90890-01200
Installer YM-01201, 90890-04013

▲▲▲▲▲▲▲▲▲▲▲▲▲▲▲▲▲▲▲▲▲▲▲▲▲▲▲▲▲▲▲▲

3. Eliminate:
   - carbon deposits
     (from the valve face and valve seat)
4. Check:
   - valve face
     Pitting/wear → Grind the valve face.
   - valve stem end
     Mushroom shape or diameter larger than the body of the valve stem → Replace the valve.

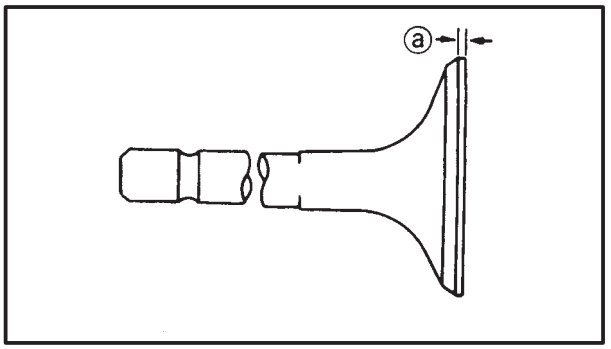

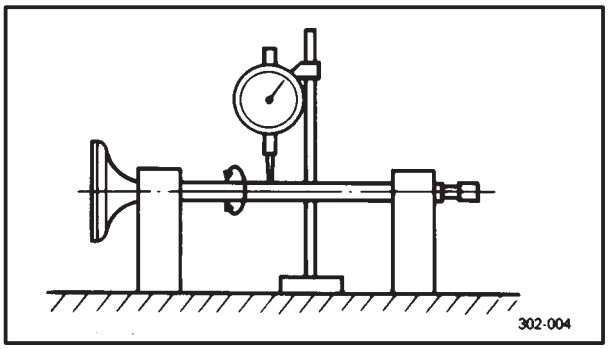

5. Measure:
   °valve margin thickness ⓐ
   Out of specification → Replace the valve.

Valve margin thickness limit **0.8 mm (0.031 in)**

6. Measure:
   °valve stem runout
   Out of specification → Replace the valve.

NOTE:

°When installing a new valve, always replace the valve guide.
°If the valve is removed or replaced, always replace the valve stem seal.

Valve stem runout **0.03 mm (0.0021 in)**

EAS00240

CHECKING THE VALVE SEATS

The following procedure applies to all of the valves and valve seats.

1. Eliminate:
   °carbon deposits
   (from the valve face and valve seat)
2. Check:
   °valve seat
   Pitting/wear → Replace the cylinder head.
3. Measure:
   °valve seat width ⓐ
   Out of specification → Replace the cylinder head.

Valve seat width limit **Intake: 1.8 mm (0.071 in)** **Exhaust: 1.8 mm (0.071 in)**

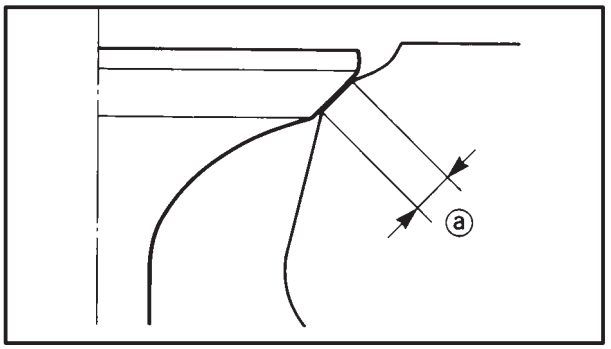

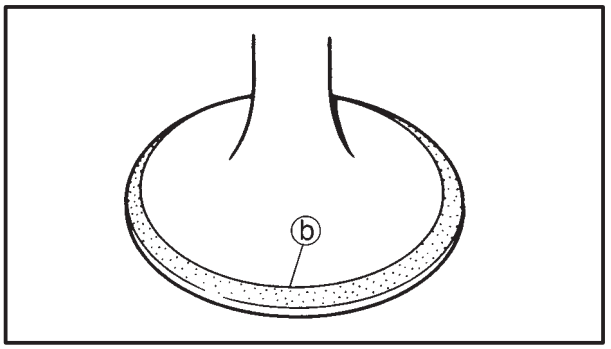

▼▼▼▼▼▼▼▼▼▼▼▼▼▼▼▼▼▼▼▼▼▼▼▼▼▼▼▼▼▼▼▼

a. Apply Mechanic's blueing dye (Dykem) ⓑ onto the valve face.
b. Install the valve into the cylinder head.
c. Press the valve through the valve guide and onto the valve seat to make a clear pattern.
d. Measure the valve seat width. Where the valve seat and valve face contacted one another, the blueing will have been removed.

▲▲▲▲▲▲▲▲▲▲▲▲▲▲▲▲▲▲▲▲▲▲▲▲▲▲▲▲▲▲▲▲

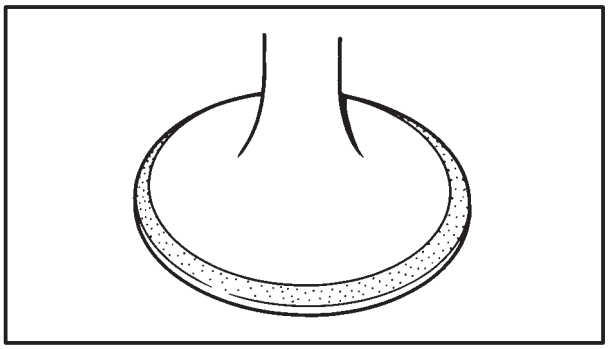

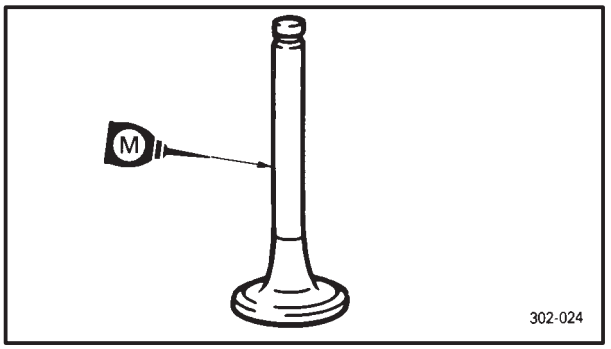

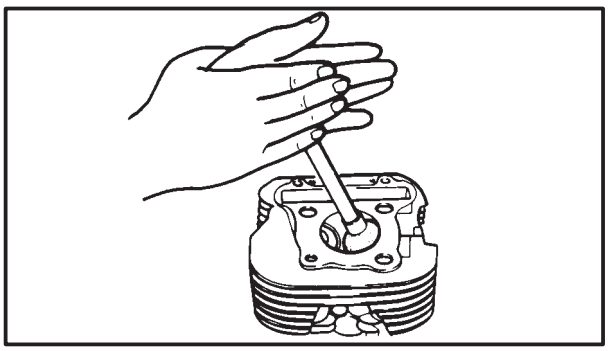

4. Lap:
   - valve face
   - valve seat

NOTE:

After replacing the cylinder head or replacing the valve and valve guide, the valve seat and valve face should be lapped.

a. Apply a coarse lapping compound to the valve face.

CAUTION:

Do not let the lapping compound enter the gap between the valve stem and the valve guide.

b. Apply molybdenum disulfide oil onto the valve stem.
c. Install the valve into the cylinder head.
d. Turn the valve until the valve face and valve seat are evenly polished, then clean off all of the lapping compound.

NOTE:

For the best lapping results, lightly tap the valve seat while rotating the valve back and forth between your hand.

e. Apply a fine lapping compound to the valve face and repeat the above steps.
f. After every lapping procedure, be sure to clean off all of the lapping compound from the valve face and valve seat.
g. Apply Mechanic's blueing dye (Dykem) onto the valve face.
h. Install the valve into the cylinder head.
i. Press the valve through the valve guide and onto the valve seat to make a clear impression.
j. Measure the valve seat width again. If the valve seat width is out of specification, reface and lap the valve seat.

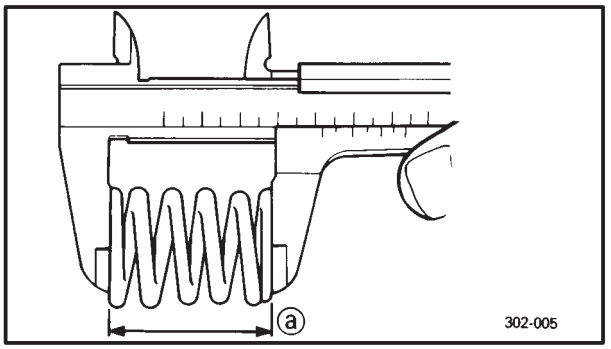

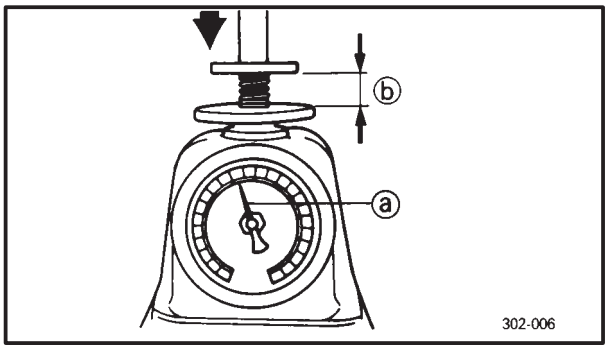

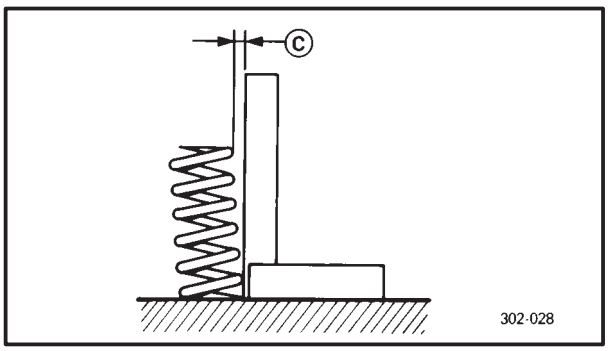

EAS00241

CHECKING THE VALVE SPRINGS

The following procedure applies to all of the valve springs.

1. Measure:
   - °valve spring free length ⓐ
     Out of specification → Replace the valve spring.

Valve spring free length (intake and exhaust)
44.6 mm (1.76 in)
<Limit>: 43.5 mm (1.71 in)

2. Measure:
   - °compressed spring force ⓐ
     Out of specification → Replace the valve spring.

ⓑ Installed length

Compressed spring force
Intake and exhaust spring
160.7 N (16.4 kg, 36.16 lb)
at 40 mm (1.57 in)

3. Measure:
   - °valve spring tilt ⓒ
     Out of specification → Replace the valve spring.

Spring tilt limit
Intake and exhaust valve spring
2.5°/1.9 mm (0.075 in)

EAS00245

INSTALLING THE VALVES

The following procedure applies to all of the valves and related components.

1. Deburr:
   - °valve stem end
     (with an oil stone)
2. Lubricate:
   - °valve stem
   - °oil seal New
     (with the recommended lubricant)

Recommended lubricant
Molybdenum disulfide oil

3. Install:
   - °valve
   - °lower spring seat
   - °oil seal New
   - °valve spring
   - °upper spring seat
     (into the cylinder head)

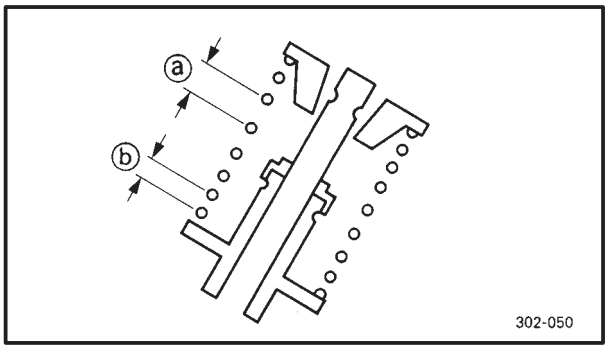

NOTE:

Install the valve spring with the larger pitch ⓐ facing up.

ⓑ Smaller pitch

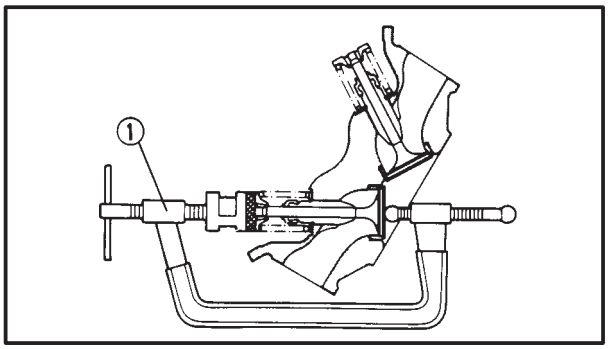

4. Install:
   °valve cotters

NOTE:

Install the valve cotters by compressing the valve spring with the valve spring compressor ①.

	Valve spring compressor **YM-04019, 90890-04019**

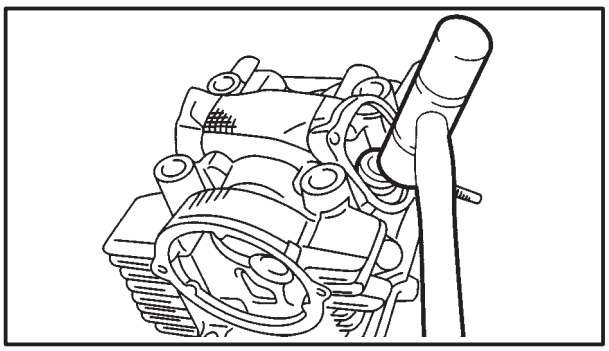

5. To secure the valve cotters onto the valve stem, lightly tap the valve tip with a soft-face hammer.

CAUTION:

Hitting the valve tip with excessive force could damage the valve.

CYLINDERS AND PISTONS

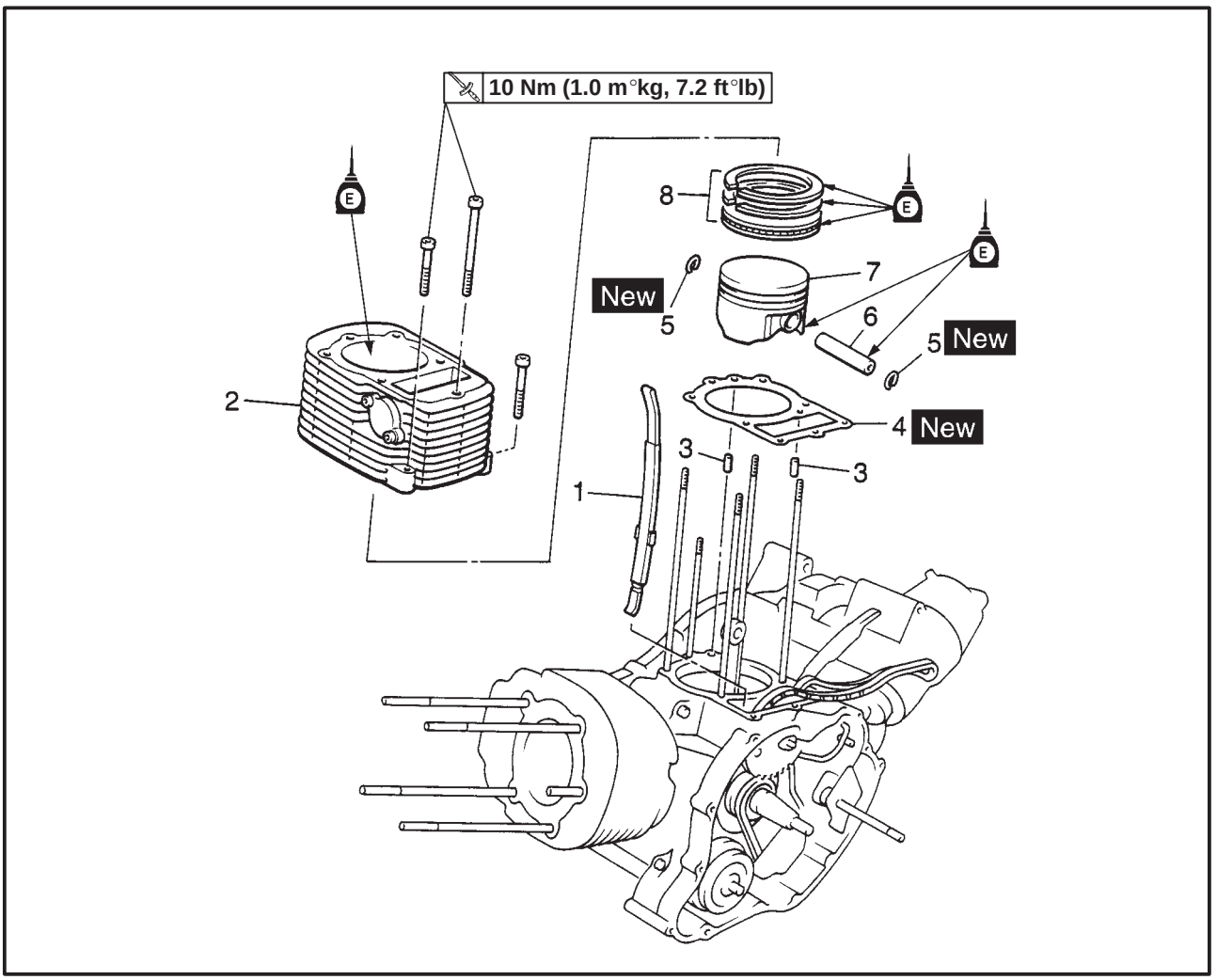

Order	Job name/Part name	Q'ty	Remarks
	Removing the cylinders and pistons		Remove the parts in the order listed.
	Cylinder heads		Refer to "CYLINDER HEADS".
1	Timing chain guide	1	The "5EL" mark should face towards the cylinder head.
2	Cylinder	1	Refer to "INSTALLING THE PISTONS AND CYLINDERS".
3	Dowel pins	2	
4	Cylinder gasket	1	
5	Piston pin clips	2	Refer to "REMOVING/INSTALLING THE CYLINDERS AND PISTONS".
6	Piston pin	1	
7	Piston	1	
8	Piston ring set	1	
			For installation, reverse the removal procedure.

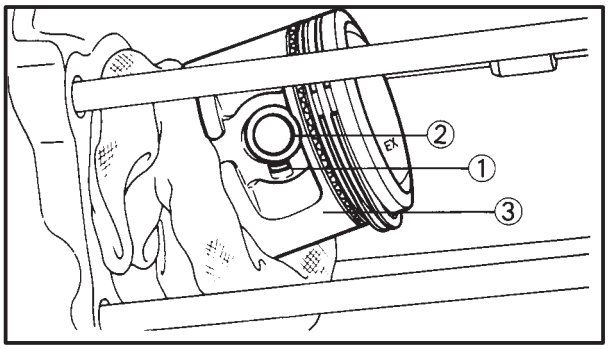

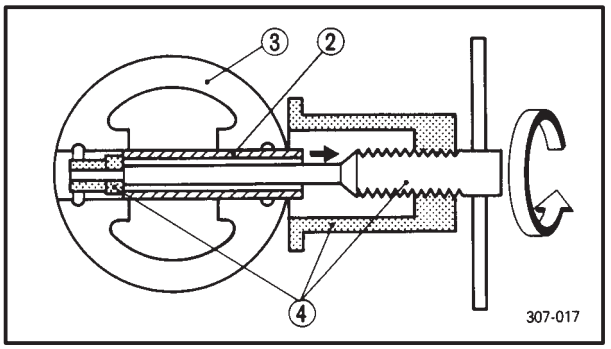

EAS00254

REMOVING THE PISTONS

The following procedure applies to all of the pistons.

1. Remove:
   - °piston pin clip ①
   - °piston pin ②
   - °piston ③

CAUTION:

Do not use a hammer to drive the piston pin out.

NOTE:

- °Before removing the piston pin clip, cover the crankcase opening with a clean rag to prevent the piston pin clip from falling into the crankcase.
- °For reference during installation, put an identification mark on each piston crown.
- °Before removing the piston pin, deburr the piston pin clip's groove and the piston's pin bore area. If both areas are deburred and the piston pin is still difficult to remove, remove it with the piston pin puller ④.

	Piston pin puller **YU-01304, 90890-01304**

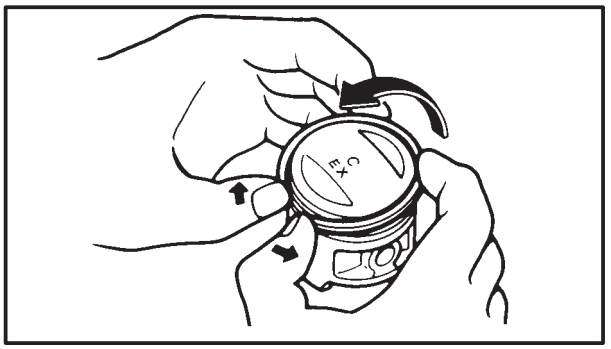

2. Remove:
   - °top ring
   - °2nd ring
   - °oil ring

NOTE:

When removing a piston ring, open the end gap with your fingers and lift the other side of the ring over the piston crown.

EB404405

CHECKING THE CYLINDERS AND PISTONS

The following procedure applies to all of the cylinders and pistons.

1. Check:
   - °piston wall
   - °cylinder wall
     Vertical scratches → Rebore or replace the cylinder, and replace the piston and piston rings as a set.

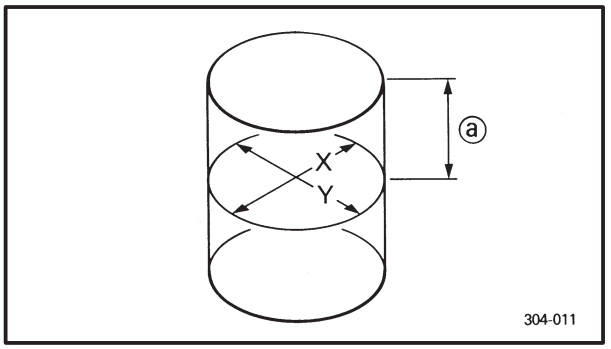

2. Measure:
   - piston-to-cylinder clearance

▼▼▼▼▼▼▼▼▼▼▼▼▼▼▼▼▼▼▼▼▼▼▼▼▼▼▼▼▼▼▼▼▼▼

a. Measure cylinder bore “C” with the cylinder bore gauge.

ⓐ 40 mm (1.57 in) from the top of the cylinder

NOTE:

Measure cylinder bore “C” by taking side-to-side and front-to-back measurements of the cylinder. Then, find the average of the measurements.

Cylinder bore gauge
YU-03017, 90890-03017

	Standard	Wear limit
Cylinder bore C:	95.00 √ 95.01 mm (3.7402 √ 3.7405 in)	95.1 mm (3.7441 in)
$C = \frac{X + Y}{2}$		

b. If out of specification, rebore or replace the cylinder, and replace the piston and piston rings as a set.

c. Measure piston skirt diameter “P” with the micrometer.

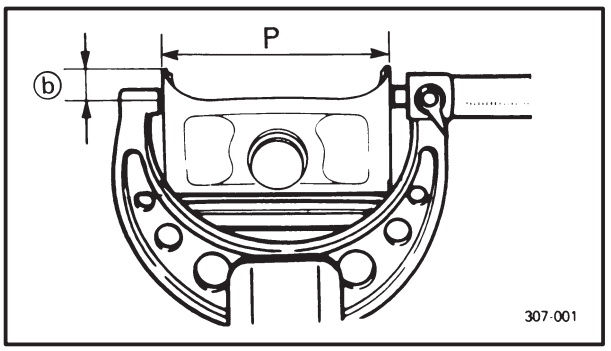

Micrometer
YU-03009, 90890-03009

ⓑ 5 mm (0.20 in) from the bottom edge of the piston.

	Piston size P
Standard	94.960 √ 94.975 mm (3.7386 √ 3.7392 in)

d. If out of specification, replace the piston and piston rings as a set.

e. Calculate the piston-to-cylinder clearance with the following formula.

Piston-to-cylinder clearance =
Cylinder bore “C” –
Piston skirt diameter “P”

Piston-to-cylinder clearance
0.025 √ 0.050 mm
(0.0010 √ 0.0020 in)
<Limit>: 0.15 mm (0.0060 in)

f. If out of specification, replace the cylinder, and replace the piston and piston rings as a set.

▲▲▲▲▲▲▲▲▲▲▲▲▲▲▲▲▲▲▲▲▲▲▲▲▲▲▲▲▲▲▲▲▲▲

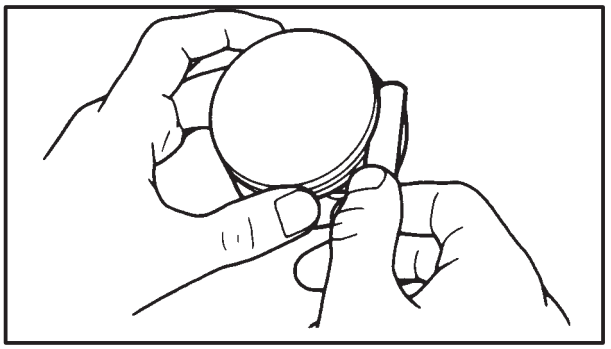

EB404410

CHECKING THE PISTON RINGS

1. Measure:
   - piston ring side clearance
     Out of specification → Replace the piston and piston rings as a set.

NOTE:

Before measuring the piston ring side clearance, eliminate any carbon deposits from the piston ring grooves and piston rings.

Piston ring side clearance
Top ring
0.04 √ 0.08 mm
(0.002 √ 0.003 in)
<Limit>: 0.1 mm (0.004 in)
2nd ring
0.03 √ 0.07 mm
(0.001 √ 0.003 in)
<Limit>: 0.1 mm (0.004 in)

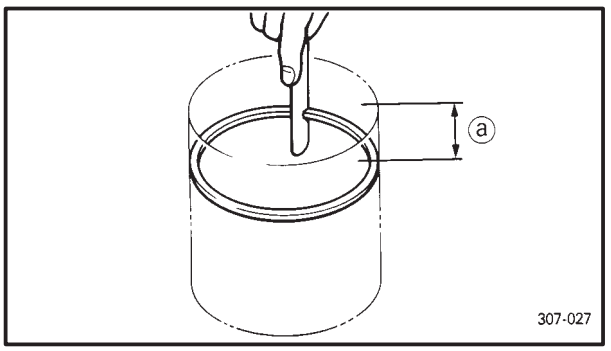

2. Install:
   - piston ring
     (into the cylinder)

NOTE:

Using the piston crown pash the ring into the cylinder so that the ring will be at a right angle to the cylinder bore.

ⓐ 40 mm (1.57 in) from the top of the cylinder

3. Measure:
   - piston ring end gap
     Out of specification → Replace the piston ring.

NOTE:

The oil ring expander spacer's end gap cannot be measured. If the oil ring rail's gap is excessive, replace all three piston rings.

Piston ring end gap
Top ring
0.3 √ 0.5 mm
(0.012 √ 0.020 in)
<Limit>: 0.8 mm (0.031 in)
2nd ring
0.3 √ 0.45 mm
(0.012 √ 0.018 in)
<Limit>: 0.8 mm (0.31 in)
Oil ring
0.2 √ 0.7 mm
(0.008 √ 0.03 in)

EAS00266

CHECKING THE PISTON PINS

The following procedure applies to all of the piston pins.

1. Check:
   - piston pin
     Blue discoloration/grooves → Replace, then inspect the lubrication system.

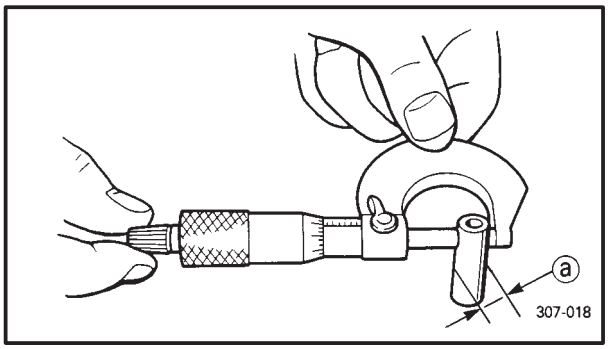

2. Measure:
   - piston pin outside diameter ⓐ
     Out of specification → Replace the piston pin.

Piston pin outside diameter
21.991 ~ 22.000 mm
(0.8658 ~ 0.8661 in)

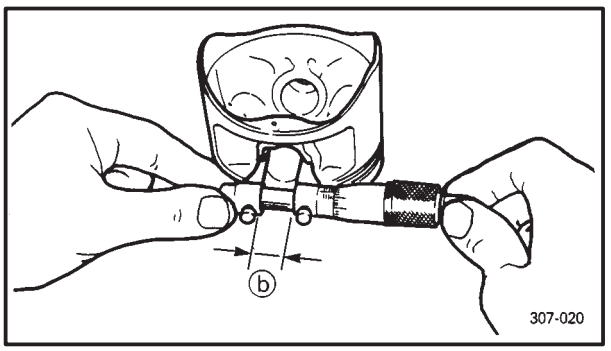

3. Measure:
   - piston pin bore inside diameter ⓑ
     Out of specification → Replace the piston

Piston pin bore inside diameter
22.004 ~ 22.015 mm
(0.8663 ~ 0.8667 in)

4. Calculate:
   - piston-pin-to-piston clearance
     Out of specification → Replace the piston pin.

Piston-pin-to-piston clearance =
Piston pin bore size ⓑ –
Piston pin outside diameter ⓐ

Piston-pin-to-piston clearance
0.004 ~ 0.024 mm
(0.0001 ~ 0.0009 in)

EB404701

INSTALLING THE PISTONS AND CYLINDERS

The following procedure applies to all of the pistons and cylinders.

1. Install:
   - oil ring expander
   - lower oil ring rail
   - upper oil ring rail
   - 2nd ring
   - top ring

NOTE:

Be sure to install the piston rings so that the manufacuturer's marks or numbers face up.

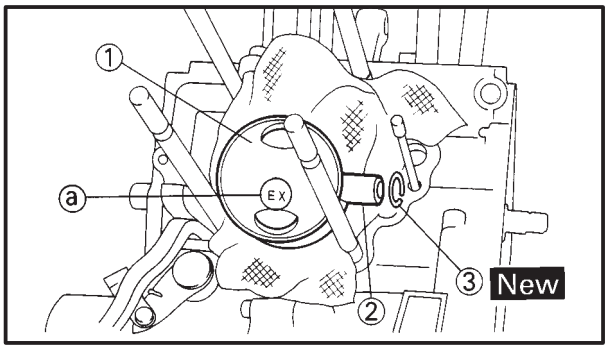

2. Install:
   - piston ①
   - piston pin ②
   - piston pin clip (New) ③

NOTE:
- Apply engine oil onto the piston pin.
- Make sure that the "EX" mark ⓐ on the piston faces towards the exhaust side of the engine.
- Before installing the piston pin clip, cover the crankcase opening with a clean rag to prevent the clip from falling into the crankcase.

3. Install:
   - gasket (New)
   - dowel pins
4. Lubricate:
   - piston
   - piston rings
   - cylinder
     (with the recommended lubricant)

	Recommended lubricant **Engine oil**

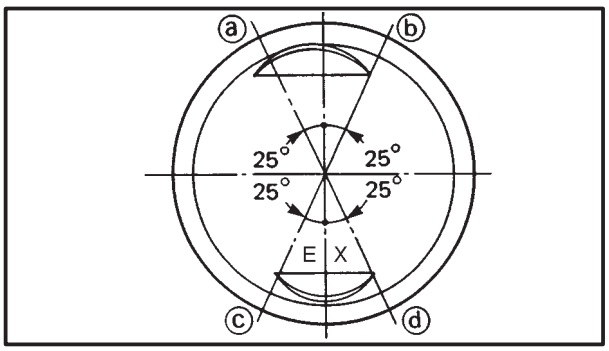

5. Offset:
   - piston ring end gaps

ⓐ Top ring
ⓑ Lower oil ring rail
ⓒ Upper oil ring rail
ⓓ 2nd ring

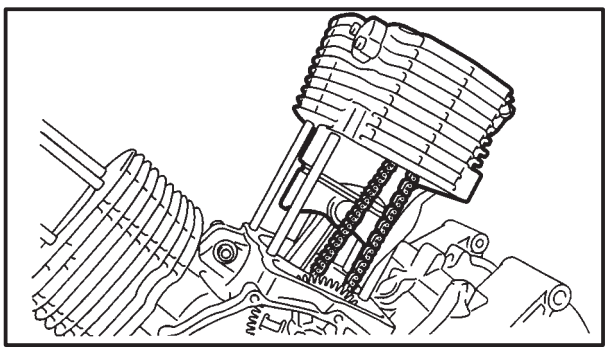

6. Install:
   - cylinder

NOTE:
- While compressing the piston rings with one hand, install the cylinder with the other hand.
- Pass the timing chain and timing chain guide (exhaust side) through the timing chain cavity.

	Cylinder bolt **10 Nm (1.0 m°kg, 7.2 ft°lb)**

TIMING GEARS

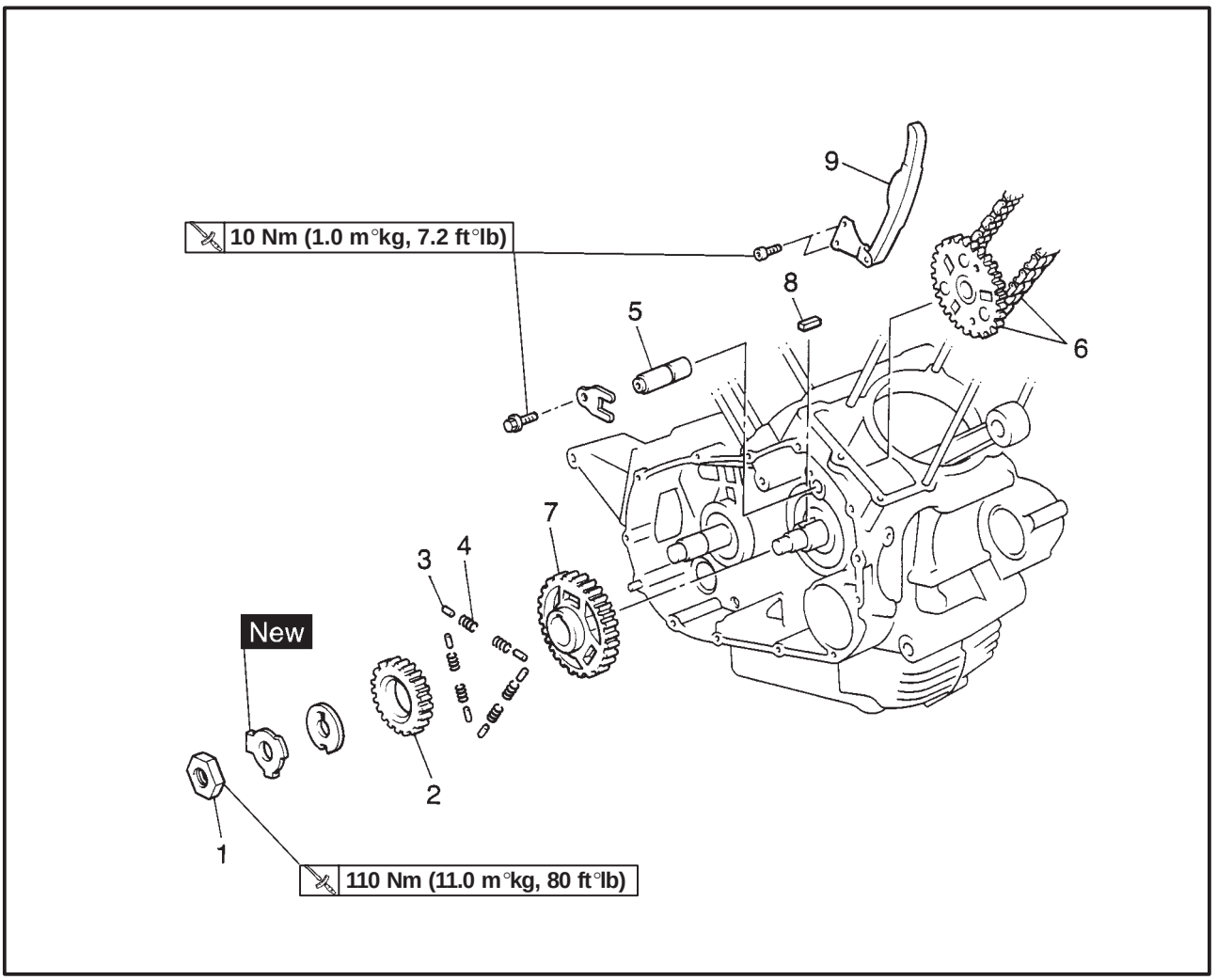

Order	Job name/Part name	Q'ty	Remarks
	Removing the timing gears		Remove the parts in the order listed.
	Cylinder heads		Refer to "CYLINDER HEAD".
	Cylinders		Refer to "CYLINDERS AND PISTONS".
	Clutch assembly		Refer to "CLUTCH".
1	Primary drive gear nut	1	
2	Timing drive gear	1	Refer to "REMOVING/INSTALLING THE TIMING DRIVE GEARS".
3	Dowel pins	6	
4	Springs	6	
5	Timing chain drive gear shaft	1	
6	Timing chain drive gear sprocket/ Timing chain	1/1	Refer to "INSTALLING THE TIMING DRIVE GEARS".
7	Primary drive gear	1	
8	Straight key	1	
9	Timing chain guide	1	
			For installation, reverse the removal procedure.

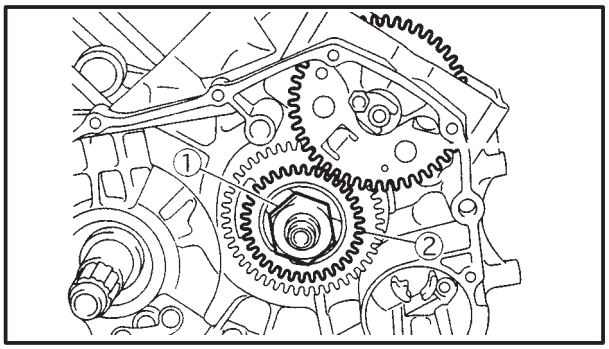

REMOVING THE TIMING DRIVE GEARS

Front cylinder

1. Straighten the lock washer tab.
2. Remove:
   - primary drive gear nut ①

NOTE:

While holding the generator rotor with the sheave holder, loosen the primary drive gear nut.

3. Remove:
   - timing drive gear ②
   - dowel pins
   - springs

NOTE:

When removing the timing drive gear, the dowel pins and springs are scatter and dropping down. Do not missing them.

Rear cylinder

NOTE:

When removing the rear cylinder timing gear, repeat the front cylinder timing gear removal procedure. However, note the following points.

1. Remove:
   - rotor assembly
   - dowel pins
   - springs
   - timing drive gear
     Refer to “GENERATOR AND STARTER CLUTCH”.

EB401422

CHECKING THE TIMING CHAINS, CAMSHAFT SPROCKETS, AND TIMING CHAIN GUIDES

The following procedure applies to all of the timing chains, camshaft sprockets, and timing chain guides.

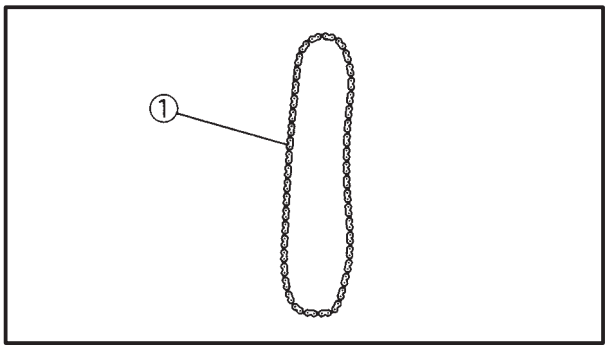

1. Check:
   - timing chain ①
     Damage/sitffness → Replace the timing chain and its respective camshaft sprockets as a set.

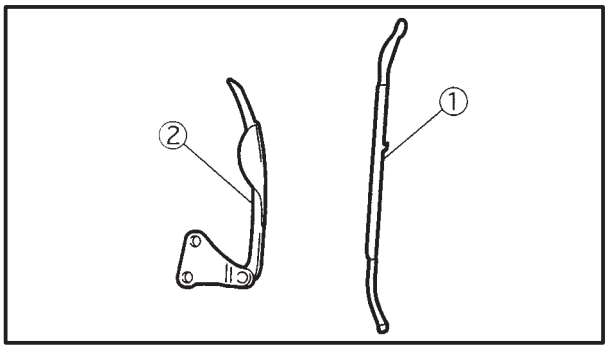

2. Check:
   - camshaft sprocket
     Damage/wear → Replace the respective camshaft sprockets and the respective timing chain as a set.
3. Check:
   - timing chain guide (exhaust side) ①
   - timing chain guide (intake side) ②
   - Damage/wear → Replace the defective part(-s).

EAS00292

CHECKING THE PRIMARY DRIVE

1. Check:
   - °primary drive gear
   - °primary driven gear
     Damage/wear → Replace the primary drive and primary driven gears as a set.
     Excessive noise during operation → Replace the primary drive and primary driven gears as a set.
2. Check:
   - °primary-drive-gear-to-primary-driven-gear free play
     Free play exists → Replace the primary drive and primary driven gears as a set.

INSTALLING THE TIMING DRIVE GEARS

1. Install:
   - °timing chain
     (onto the timing chain drive gear sprocket)

NOTE:

To prevent the timing chain from falling into the crankcase, fasten it with a wire.

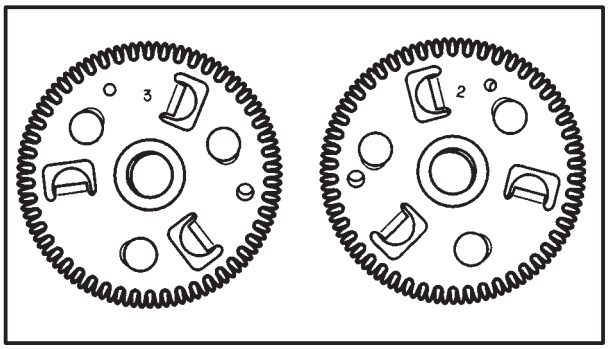

2. Install:
   - °timing chain drive gear sprocket
   - °timing chain drive gear shaft

NOTE:

Make sure that the “2” mark on the timing chain drive gear sprocket is installed in the rear cylinder and the “3” mark on the timing chain drive gear sprocket is installed in the front cylinder.

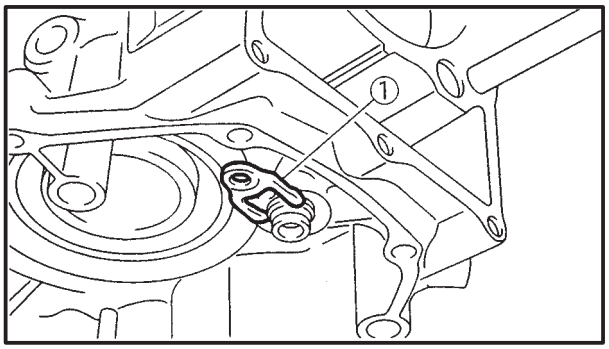

3. Install:
   - °stopper plate ①
   - °stopper plate bolt

10 Nm (1.0 m°kg, 7.2 ft°lb)

NOTE:

Turn the timing chain drive gear shaft so that the stopper plate fits correctly into the slot and then fasten the stopper plate with the bolt.

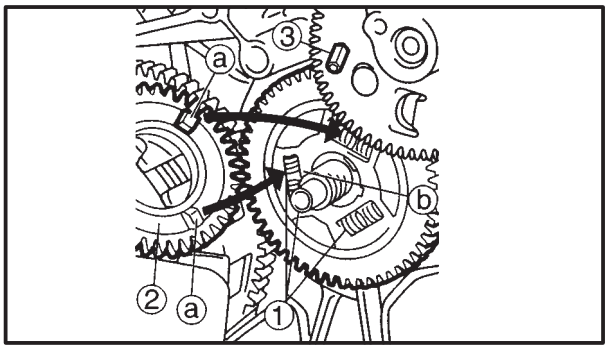

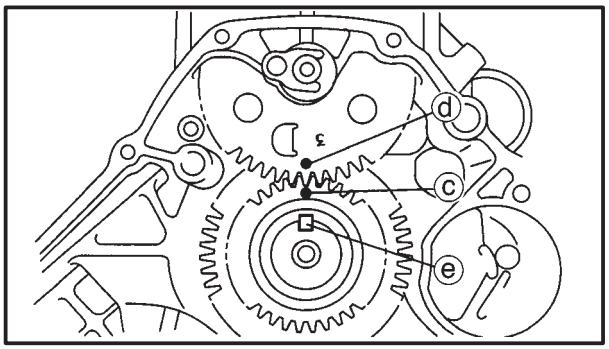

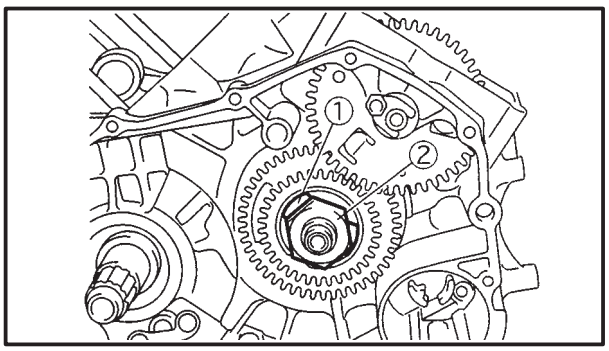

Front cylinder

1. Install:
   (Front cylinder)
   - springs ①
   - dowel pins
   - timing drive gear ②

NOTE:

- Insert the suitable pin ③ into the hole of timing chain drive gear sprocket and match the gear teeth.
- Push the projections ⓐ on the timing drive gear into the spaces ⓑ.
- Align the punch mark ⓒ on the timing drive gear, the punch mark ⓓ on the timing chain drive gear sprocket and the key posision ⓔ as shown.

2. Install:
   - claw washer
   - lock washer ① New
   - primary drive gear nut ②

110 Nm (11.0 m°kg, 80 ft°lb)

NOTE:

While holding the generator retor with the sheave holder, tighten the primary drive gear nut.

3. Bend the lock washer tab along a flat side of the nut.

Rear cylinder

NOTE:

When installing the rear cylinder timing gear, repeat the front cylinder timing gear installation procedure. However, note the following points.

1. Install:
   - springs
   - dowel pins
   - timing drive gear
   - rotor assembly
     Refer to “GENERATOR AND STARTER CLUTCH”.

CLUTCH
RIGHT CRANKCASE COVER

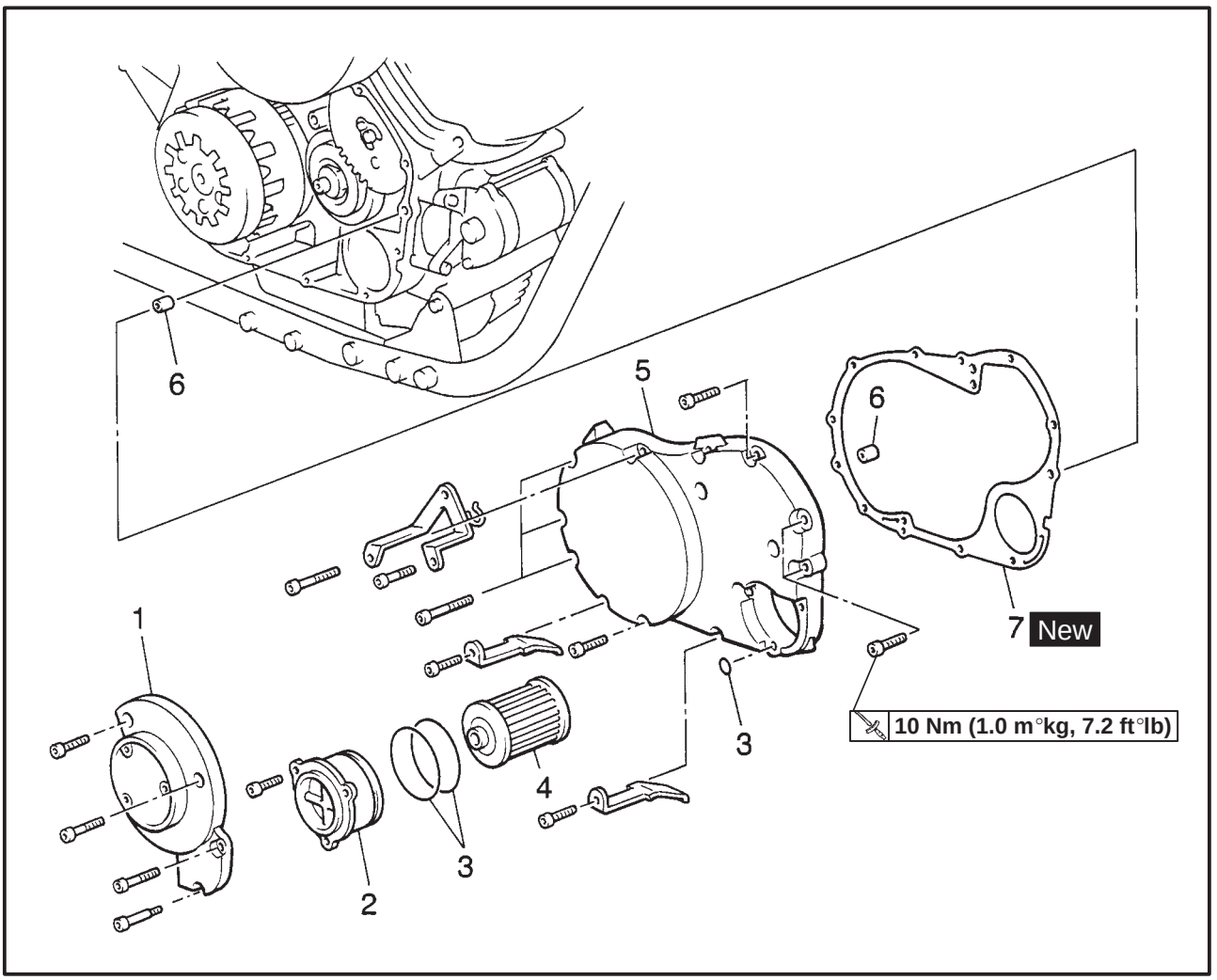

Order	Job name/Part name	Q'ty	Remarks
	Removing the right crankcase cover		Remove the parts in the order listed. Stand the motorcycle on a level surface. **WARNING** **Securely support the motorcycle so there is no danger of it falling over.**
	Engine oil		Refer to "ENGINE OIL REPLACEMENT" in CHAPTER 3.
	Muffler assembly Exhaust pipes Brake pedal/Footrest Rear brake master cylinder/bracket		Refer to "ENGINE REMOVAL".
1	Oil filter cover plate	1	
2	Oil filter cover	1	
3	O-rings	3	
4	Oil filter	1	
5	Right crankcase cover	1	

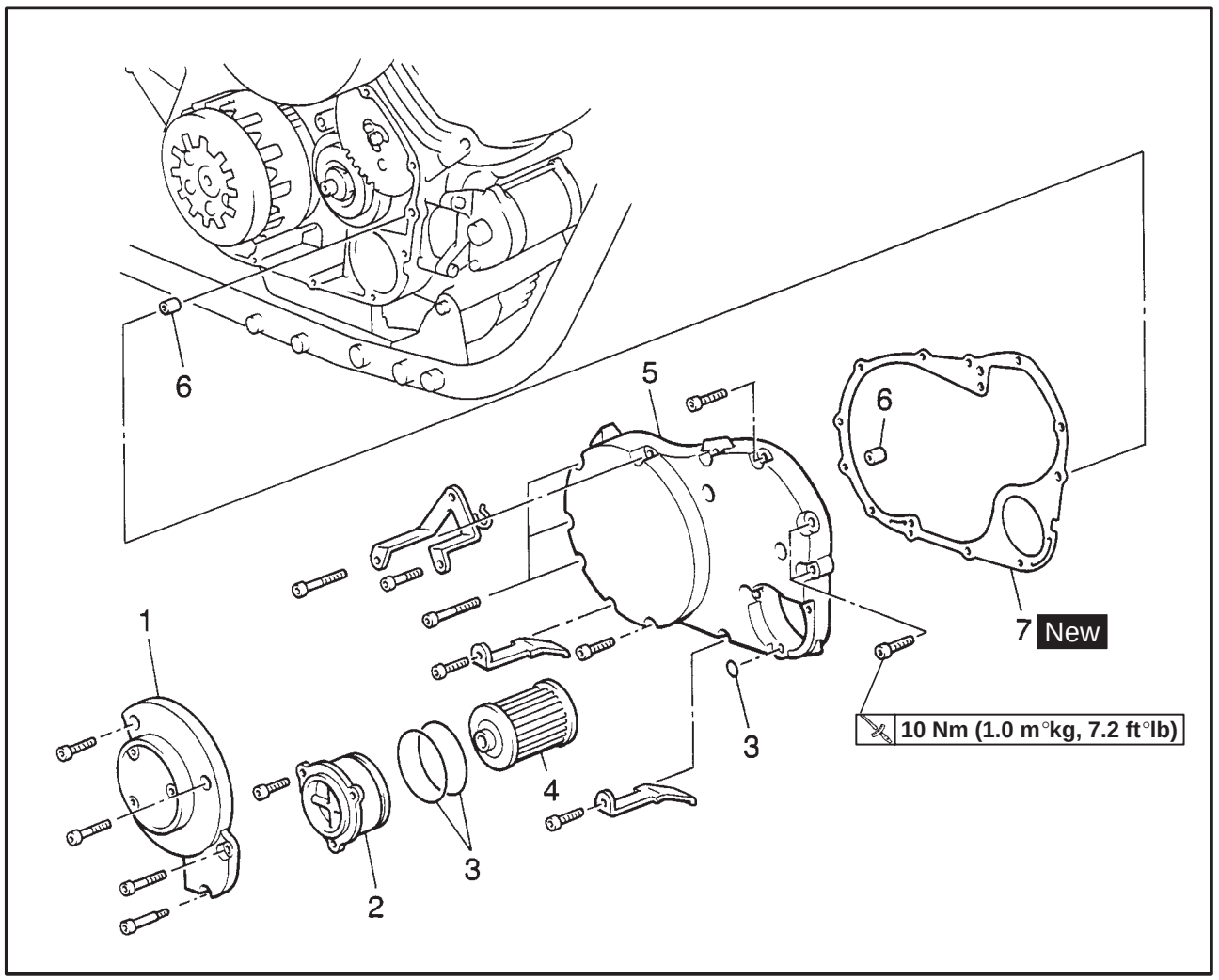

Order	Job name/Part name	Q'ty	Remarks
6	Dowel pins	2	
7	Crankcase cover gasket	1	For installation, reverse the removal procedure.

CLUTCH ASSEMBLY

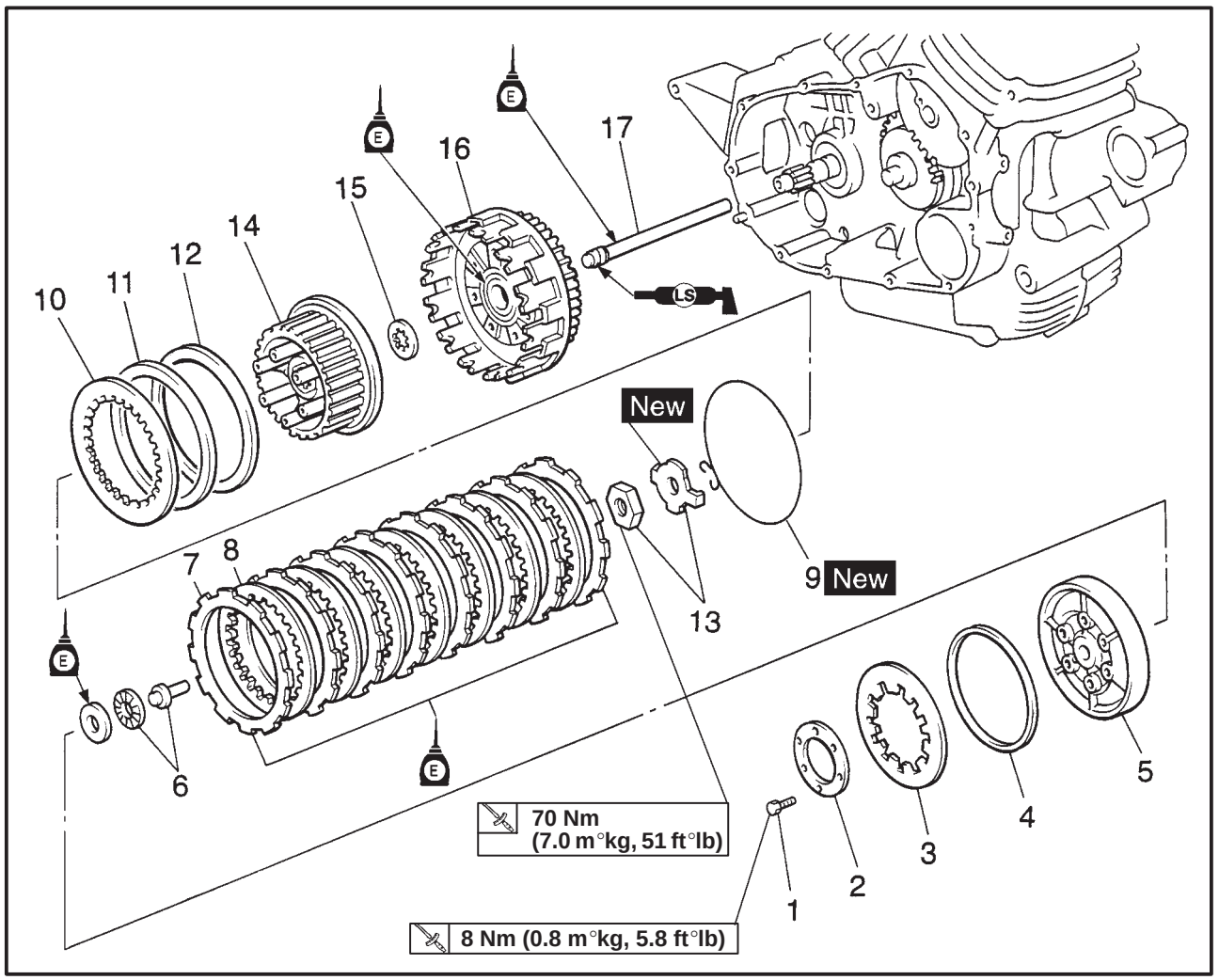

Order	Job name/Part name	Q'ty	Remarks
	Removing the clutch		Remove the parts in the order listed.
1	Clutch spring bolts	6	Refer to "INSTALLING THE CLUTCH".
2	Clutch spring plate	1	
3	Clutch spring	1	
4	Clutch spring seat	1	
5	Clutch pressure plate	1	
6	Bearing/short clutch push rod	1/1	
7	Friction plates	6	
8	Clutch plates	5	
9	Wire circlip	1	Refer to "REMOVING/INSTALLING THE CLUTCH."
10	Clutch plate	1	
11	Damper	1	
12	Clutch damper plate	1	
13	Nut/lock washer	1/1	
14	Clutch boss	1	

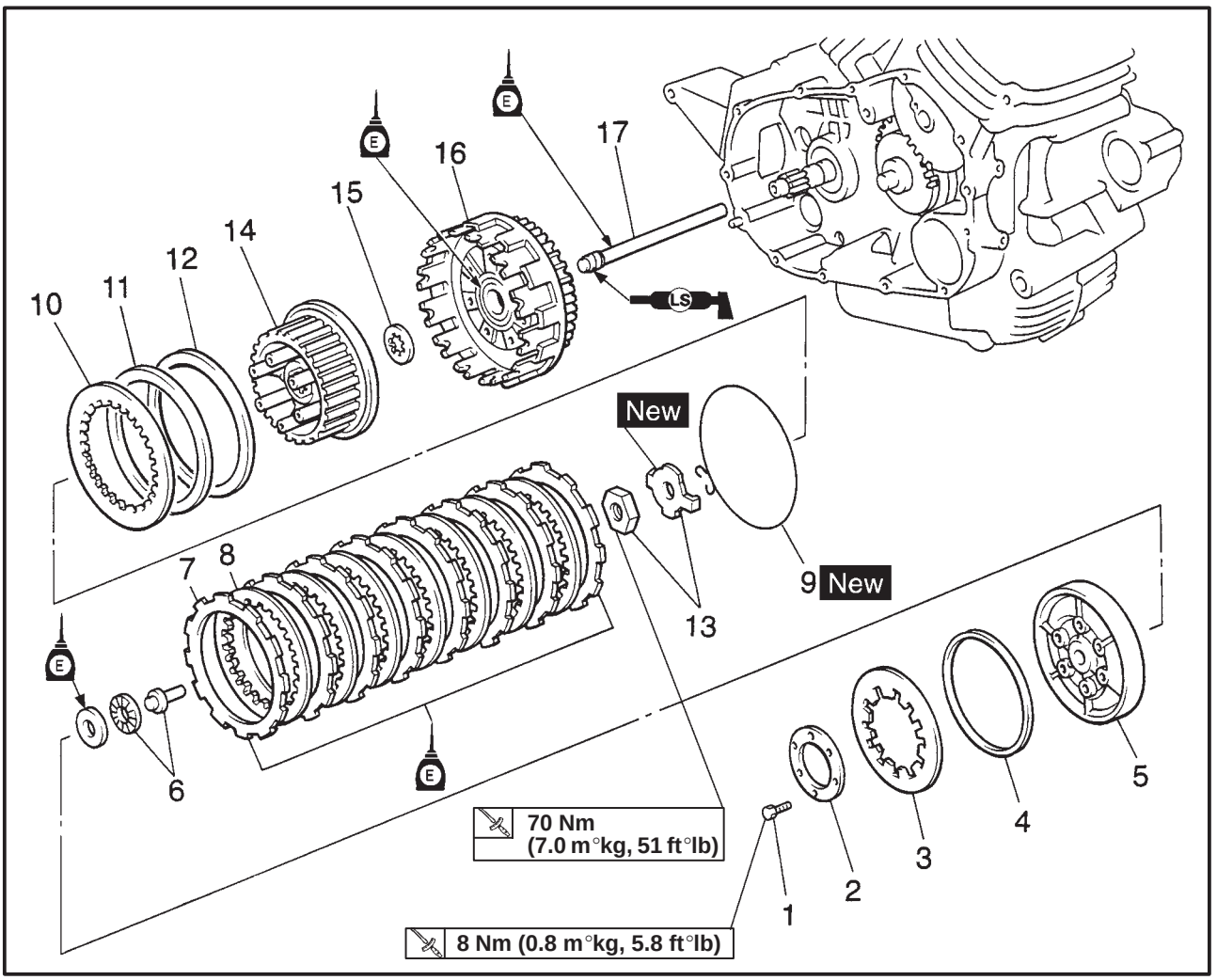

Order	Job name/Part name	Q'ty	Remarks
15	Thrust washer	1	
16	Clutch housing	1	
17	Long clutch push rod	1	
			For installation, reverse the removal procedure.

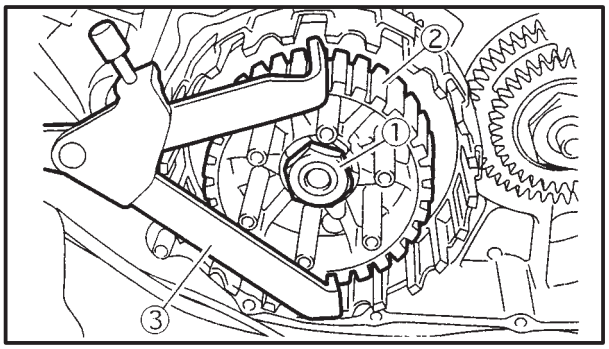

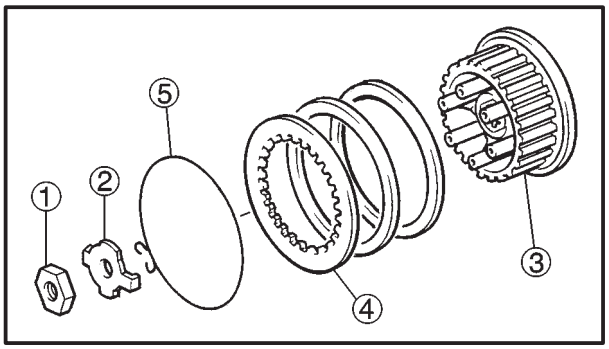

EAS00278

REMOVING THE CLUTCH

1. Straighten the lock washer tab.
2. Loosen:
   - clutch boss nut ①

NOTE:

While holding the clutch boss ② with the clutch holding tool ③, loosen the clutch boss nut.

Clutch holding tool
YM-91042, 90890-04086

3. Remove:
   - clutch boss nut ①
   - lock washer ②
   - clutch boss ③

NOTE:

There is a built-in damper between the clutch boss ③ and the clutch plate ④. It is not necessary to remove the wire circlip ⑤ and disassemble the built-in damper unless there is serious clutch chattering.

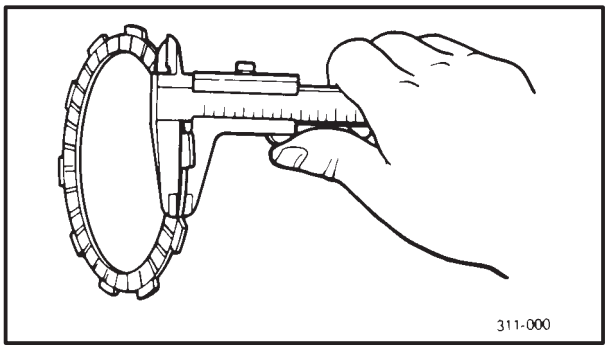

EAS00281

CHECKING THE FRICTION PLATES

The following procedure applies to all of the friction plates.

1. Check:
   - friction plate
     Damage/wear → Replace the friction plates as a set.
2. Measure:
   - friction plate thickness
     Out of specification → Replace the friction plates as a set.

NOTE:

Measure the friction plate at four places.

Friction plate thickness
2.9 √ 3.1 mm (0.114 √ 0.122 in)
<Limit>: 2.8 mm (0.11 in)

EAS00286

CHECKING THE PRESSURE PLATE

1. Check:
   - pressure plate
     Cracks/damage → Replace.
   - bearing
     Damage/wear → Replace.

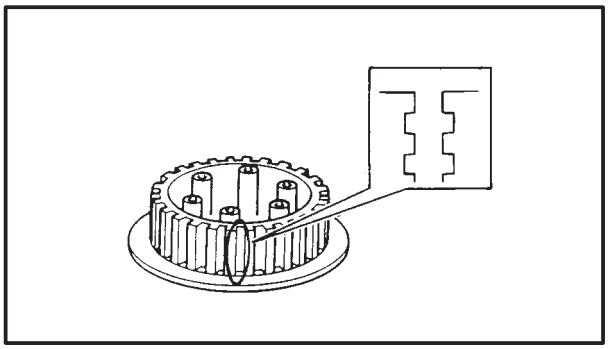

EAS00285

CHECKING THE CLUTCH BOSS

1. Check:
   - clutch boss splines
     Damage/pitting/wear → Replace the clutch boss.

NOTE:

Pitting on the clutch boss splines will cause erratic clutch operation.

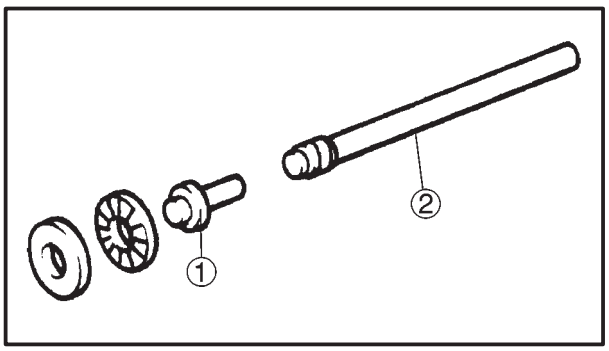

EAS00288

CHECKING THE CLUTCH PUSH RODS

1. Check:
   - short clutch push rod ①
   - long clutch push rod ②
     Cracks/damage/wear → Replace the defective part(-s).
2. Measure:
   - long clutch push rod bending limit
     Out of specification → Replace the long clutch push rod.

Long clutch push rod bending limit
0.5 mm (0.02 in)

EAS00281

CHECKING THE CLUTCH PLATES

The following procedure applies to all of the clutch plates.

1. Check:
   - clutch plate
     Damage → Replace the clutch plates as a set.

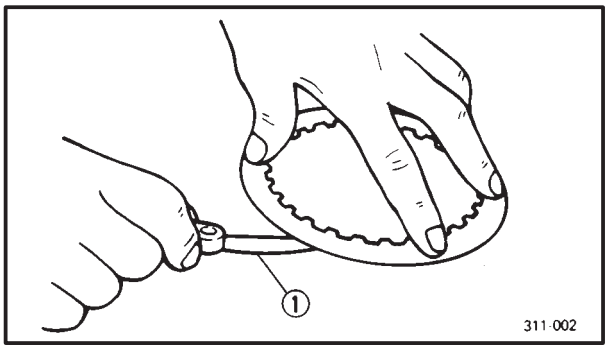

2. Measure:
   - clutch plate warpage
     (with a surface plate and thickness gauge ①)
     Out of specification → Replace the clutch plates as a set.

Clutch plate warpage limit
Less than 0.1 mm (0.004 in)

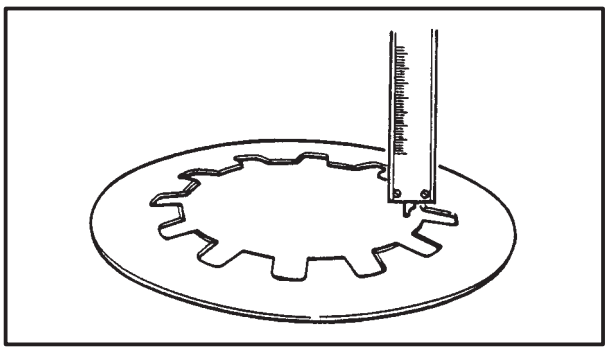

EAS00283

CHECKING THE CLUTCH SPRING AND CLUTCH SPRING SEAT PLATE

1. Check:
   - clutch spring plate
     Damage → Replace.
2. Check:
   - clutch spring plate seat
     Damage → Replace.
3. Measure:
   - clutch spring free height
     Out of specificatrion → Replace the clutch spring

Clutch spring free height
7.2 mm (0.283 in)
<Limit>: 6.5 mm (0.256 in)

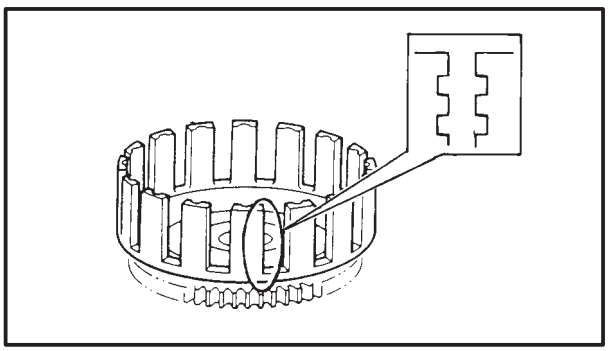

EAS00284

CHECKING THE CLUTCH HOUSING

1. Check:
   - clutch housing dogs
     Damage/pitting/wear → Deburr the clutch housing dogs or replace the clutch housing.

NOTE:

Pitting on the clutch housing dogs will cause erratic clutch operation.

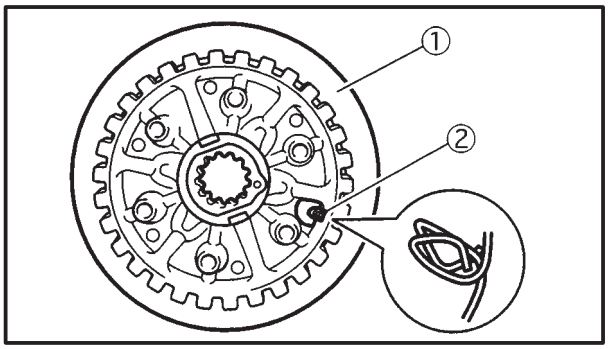

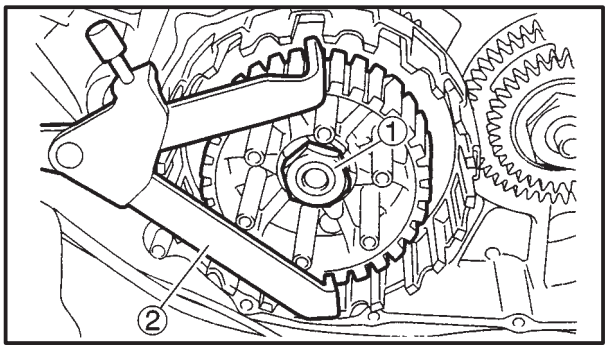

EAS00295

INSTALLING THE CLUTCH

1. Install:
   - clutch housing ①

NOTE:

- If the wire circlip ② has been removed, carefully install a new one as shown.

2. Tighten:
   - lock washer New
   - clutch boss nut ①

70 Nm (7.0 m·kg, 51 ft·lb)

NOTE:

While holding the clutch boss with the clutch holding tool ② , tighten the clutch boss nut.

Clutch holding tool
YM-91042, 90890-04086

3. Bend the lock washer tab along a flat side of the nut.
4. Lubricate:
   - long clutch push rod
   - short clutch push rod
   (with the recommended lubricant)

Recommended lubricant
Lithium soap base grease

5. Lubricate:
   - friction plates
   - clutch plates
   (with the recommended lubricant)

Recommended lubricant
Engine oil

6. Install:
   - friction plates
   - clutch plates
   - long clutch push rod
   - short clutch push rod
   - bearing
   - washer

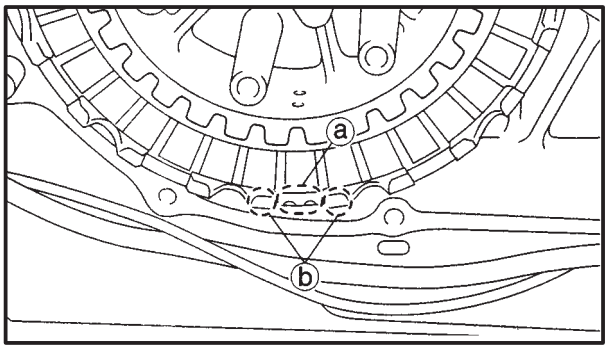

NOTE:

Make sure that the semicircular slot ⓐ in the friction plate is aligned with the mark ⓑ on the clutch housing.

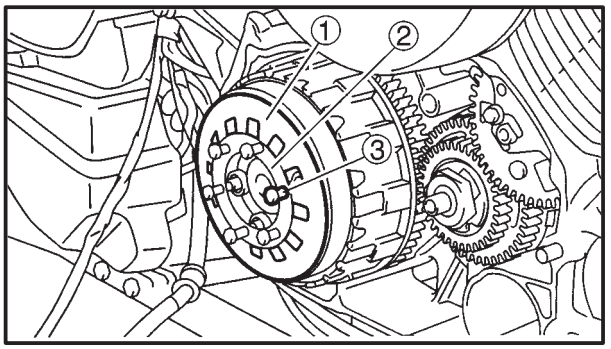

7. Install:
   - clutch pressure plate
   - clutch spring plate seat
   - clutch spring ①
   - clutch spring plate ②
   - clutch spring bolts ③

NOTE:

Tighten the clutch spring bolts in stages and in a crisscross pattern.

	Clutch spring bolt **8 Nm (0.8 m°kg, 5.8 ft°lb)**

GENERATOR AND STARTER CLUTCH
STATOR COIL AND PICKUP COIL

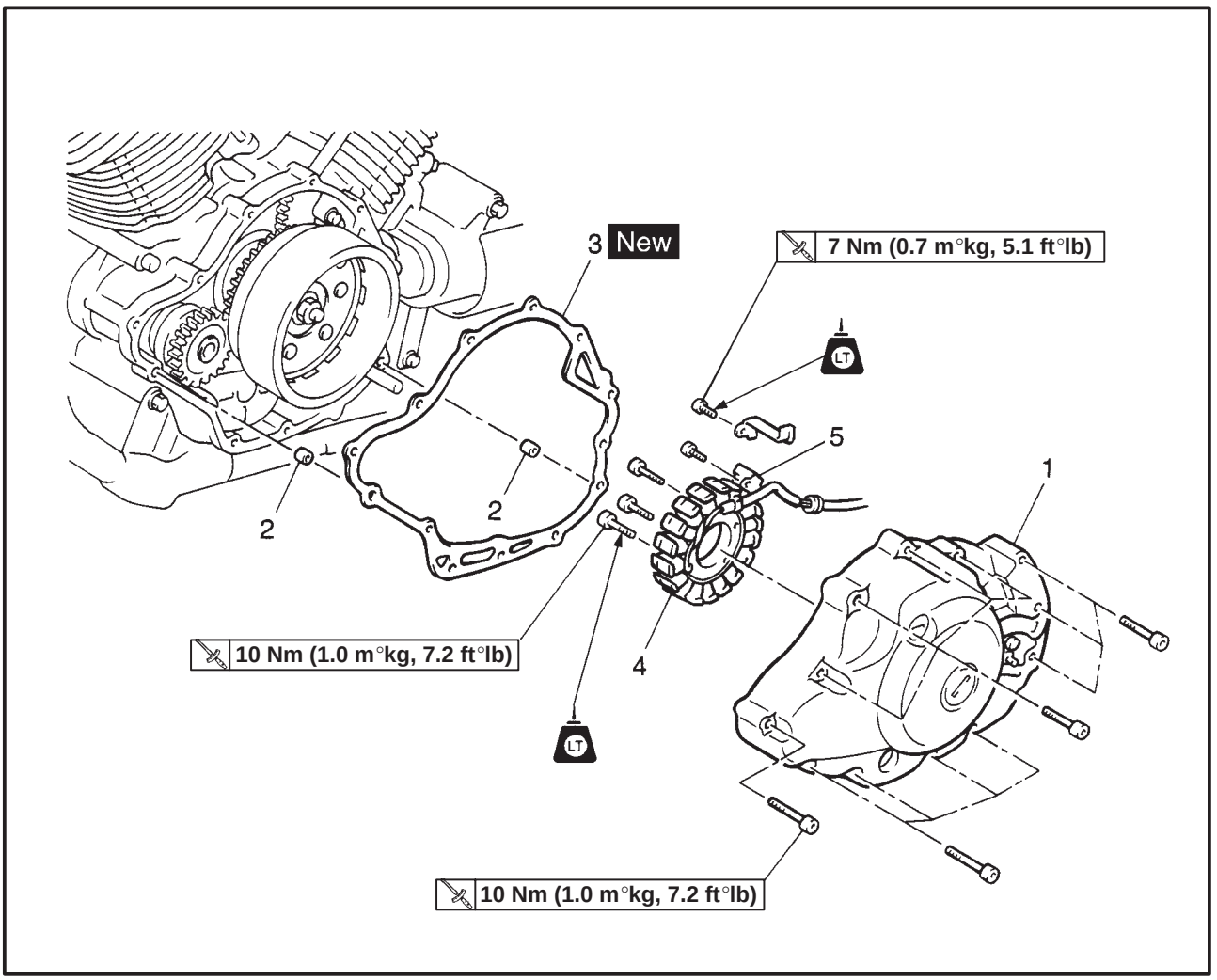

Order	Job name/Part name	Q'ty	Remarks
	Removing the stator coil and pickup coil		Remove the parts in the order listed
	Engine oil		Refer to "ENGINE OIL REPLACEMENT" in CHAPTER 3.
	Left side cover AC magneto lead/pickup lead/sidestand switch lead Footrest/shift pedal Sidestand Clutch adjusting cover/clutch cable		Refer to "ENGINE REMOVAL".
1	Left crankcase cover	1	
2	Dowel pins	2	
3	Gasket	1	
4	Stator coil	1	
5	Pickup coil	1	
			For installation, reverse the removal procedure.

GENERATOR AND STARTER CLUTCH

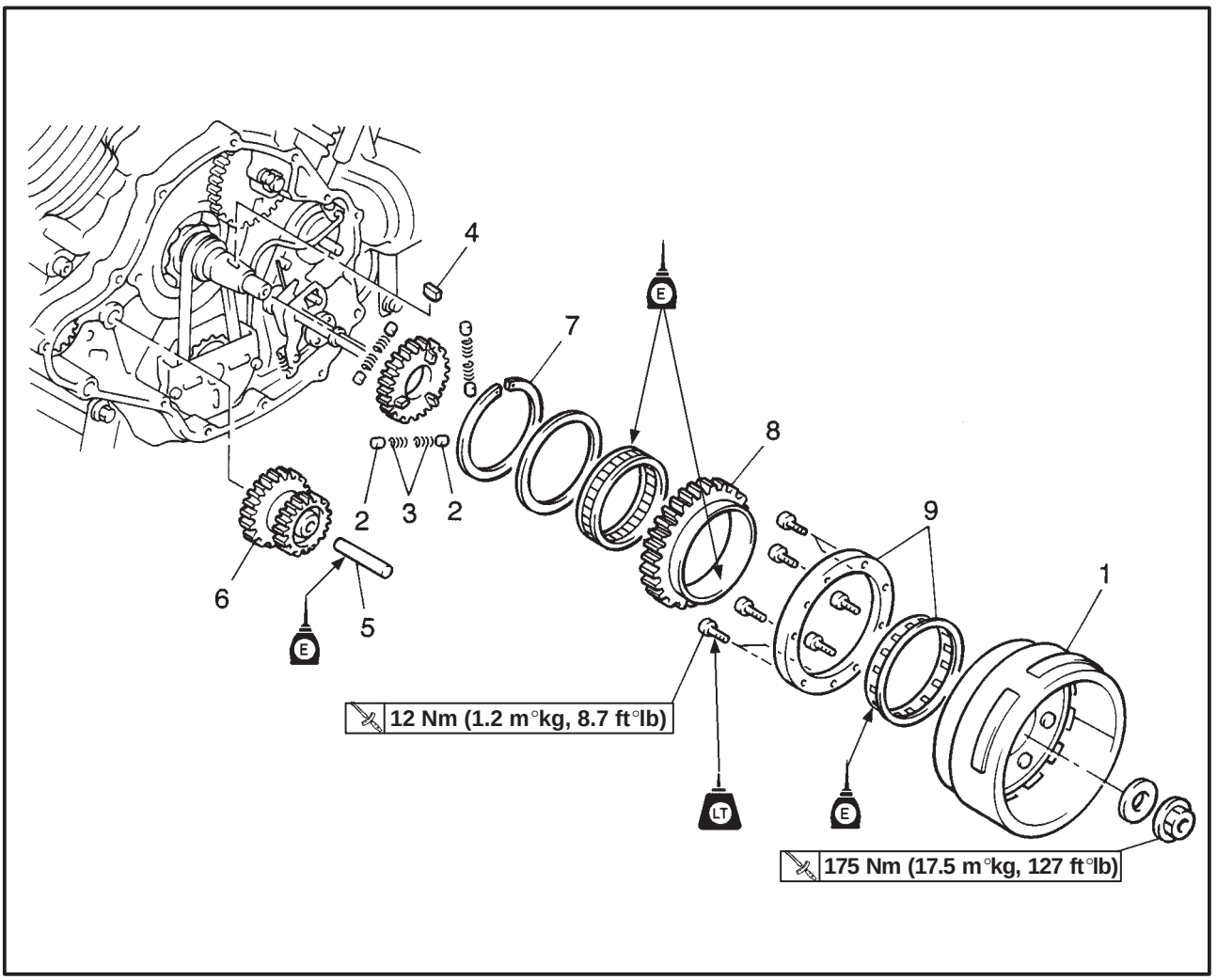

Order	Job name/Part name	Q'ty	Remarks
	Removing the generator and starter clutch.		Remove the parts in the order listed
1	Rotor	1	Refer to "REMOVING/INSTALLING THE GENERATOR."
2	Dowel pins	6	
3	Springs	6	
4	Woodruff key	1	
5	Shaft	1	
6	Starter idler gear	1	
7	Circlip	1	
8	Starter clutch drive gear	1	Refer to "INSTALLING THE GENERATOR."
9	Starter clutch assembly	1	
			For installation, reverse the removal procedure.

EAS00347

REMOVING THE GENERATOR

1. Remove:
   - °camshaft sprocket cover
   - °tappet covers
     Refer to “REAR CYLINDER HEAD.”

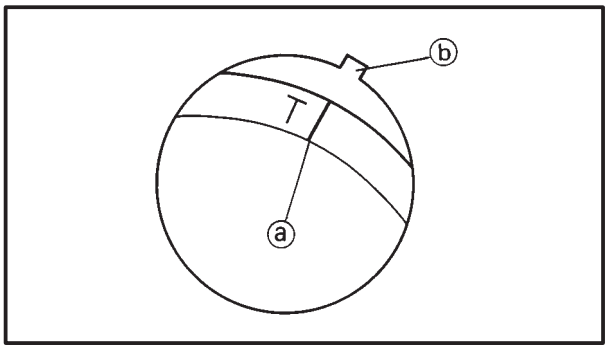

2. Align:
   - °“T” mark ⓐ (with the stationary pointer ⓑ)

▼▼▼▼▼▼▼▼▼▼▼▼▼▼▼▼▼▼▼▼▼▼▼▼▼▼▼▼▼▼▼▼

a. Temporarily install the AC magneto cover without the pickup coil and stator coil.
b. Turn the crankshaft clockwise.
c. Align the “T” mark ⓐ with the stationary pointer ⓑ on the crankcase cover (left) when the rear piston is at TDC on the compression stroke.
d. Check that the rear piston is at TDC in the compression stroke.
e. The rear piston is at TDC on the compression stroke when there is clearance at both of the rocker arms. If there is no clearance then turn the crankshaft clockwise one full turn.
f. When the “T” mark is aligned with the stationary pointer the punch mark ⓒ on the camshaft sprocket should be aligned with the stationary pointer ⓓ on the cylinder head.

▲▲▲▲▲▲▲▲▲▲▲▲▲▲▲▲▲▲▲▲▲▲▲▲▲▲▲▲▲▲▲▲

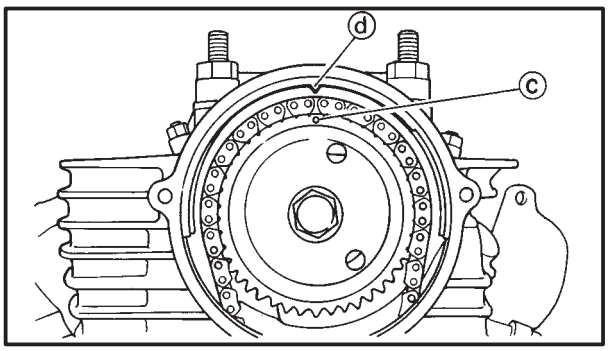

3. Remove:
   - °generator rotor nut ①
   - °washer

NOTE:

- °While holding the generator rotor ② with the sheave holder ③, loosen the generator rotor nut.
- °Do not allow the sheave holder to touch the projection on the generator rotor.

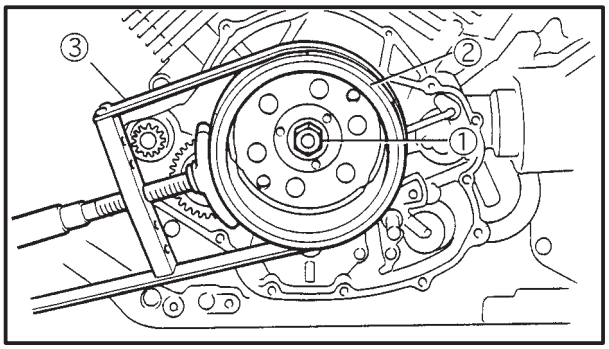

	Sheave holder **YS-01880, 90890-01701**

4. Remove:
   - °generator rotor ①
     (with the flywheel puller set ② and adapter ③)
   - °woodruff key

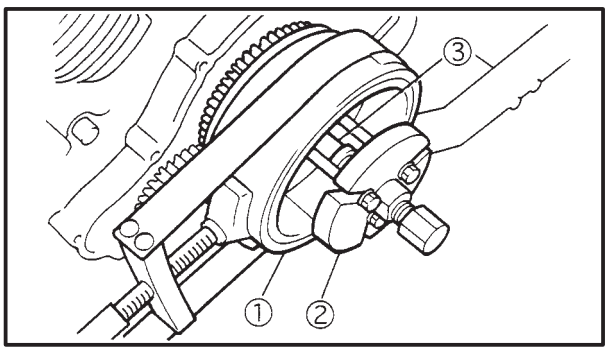

NOTE:

- Remove the rotor by pushing back the rotor, the flywheel puller ② and the adapter ③.
- Install the flywheel puller bolts and tighten the center bolt, making sure that the tool body stays parallel to the rotor. If necessary, one holding bolt may be backed out slightly for re-alignment of the tool.
- When rotor is removed, the dowel pins and springs are scatter and dropping down. Do not missing them.

Sheave holder:
YS-01880, 90890-01701
Flywheel puller:
YU-33270, 90890-01362
Adapter:
YM-38145, 90890-04131

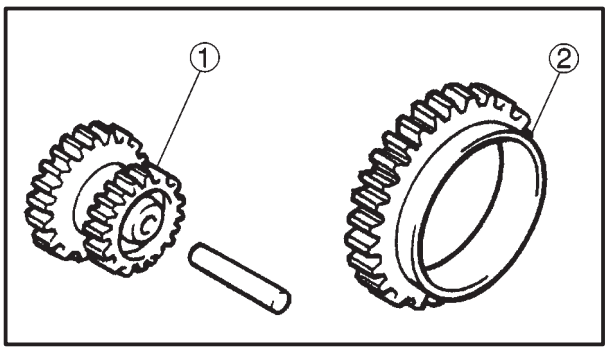

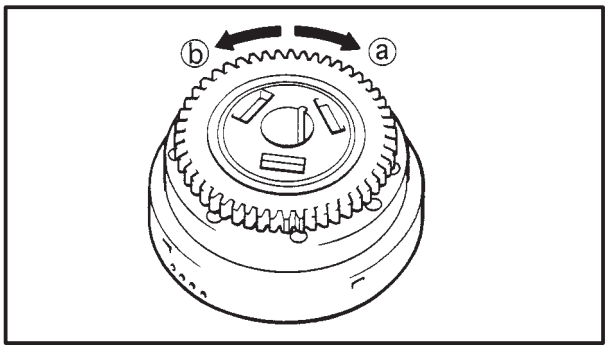

EAS00349

CHECKING THE STARTER CLUTCH

1. Check:
   - starter clutch idle gear ①
   - starter clutch drive gear ②
   Burrs/chips/roughness/wear → Replace the defective part(-s).
2. Check:
   - starter clutch operation

▼▼▼▼▼▼▼▼▼▼▼▼▼▼▼▼▼▼▼▼▼▼▼▼▼▼▼▼▼▼▼▼

a. When turning the starter clutch drive gear counter clockwise ⓑ, the starter clutch and the starter clutch drive gear should engage. If the starter clutch drive gear and starter clutch do not engage, the starter clutch is faulty and must be replaced.
b. When turning the starter clutch drive gear clockwise ⓐ, it should turn freely. If the starter clutch drive gear does not turn freely, the starter clutch is faulty and must be replaced.

▲▲▲▲▲▲▲▲▲▲▲▲▲▲▲▲▲▲▲▲▲▲▲▲▲▲▲▲▲▲▲▲

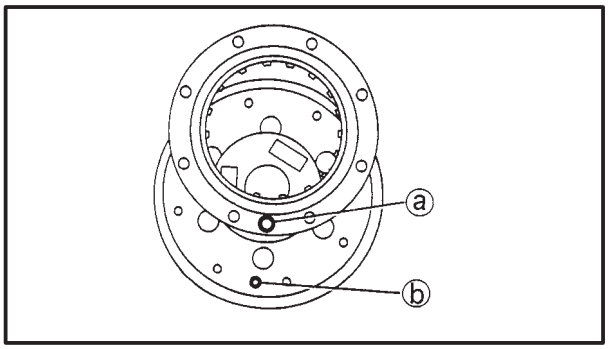

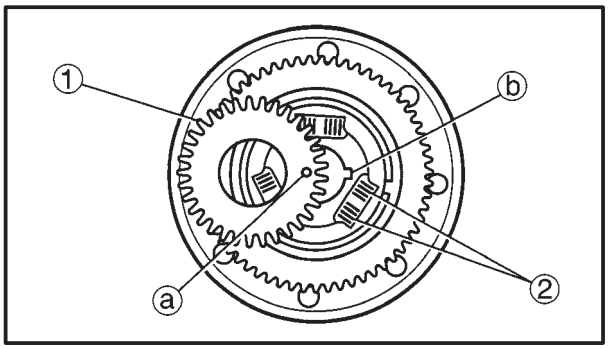

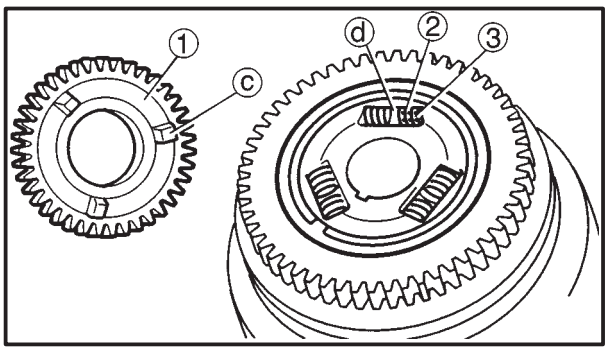

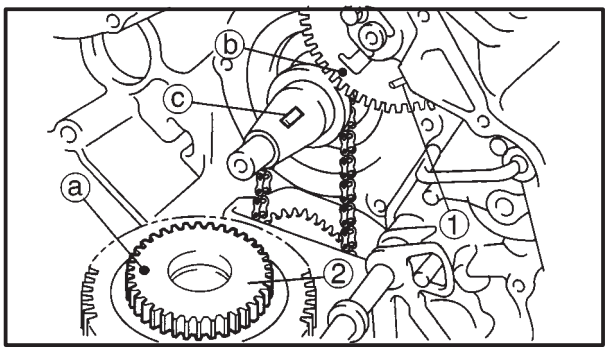

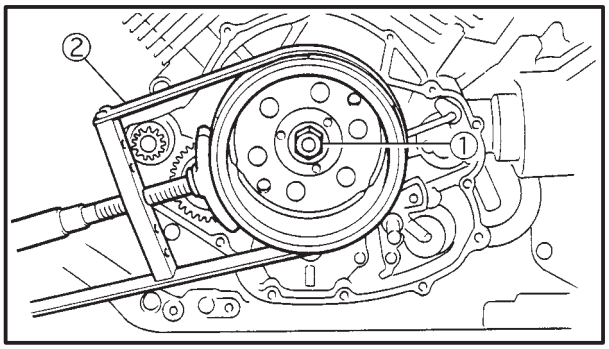

INSTALLING THE GENERATOR

1. Install:
   - starter clutch assembly

NOTE:

Align the hole ⓐ on the starter clutch housing with the hole ⓑ on the rotor.

Starter clutch bolt:
12 Nm (1.2 m°kg, 8.7 ft°lb)
LOCTITE ®

2. Install:
   - timing drive gear ①
   - springs ②
   - dowel pins ③

NOTE:

- Align the punch mark ⓐ on the timing drive gear with the key slide ⓑ.
- Push the projections ⓒ on the timing drive gear into the space ⓓ.

3. Install:
   - rotor assembly

NOTE:

- Insert the suitable pin ① into the hole of timing chain drive gear sprocket and match the gear teeth.
- Align the punch mark ⓐ on the timing drive gear ② the punch mark ⓑ on the timing chain drive gear sprocket and the key position ⓒ as shown.
- When installing the rotor, make sure the woodruff key is properly seated in the key way of the crankshaft.

4. Tighten:
   - nut (rotor) ① **175 Nm (17.5 m°kg, 127 ft°lb)**

NOTE:

Tighten the rotor nut ① while holding the magneto rotor with a sheave holder ②.

Sheave holder:
YS-01880, 90890-01701

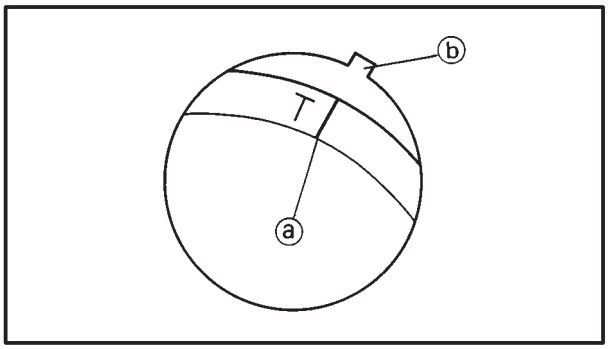

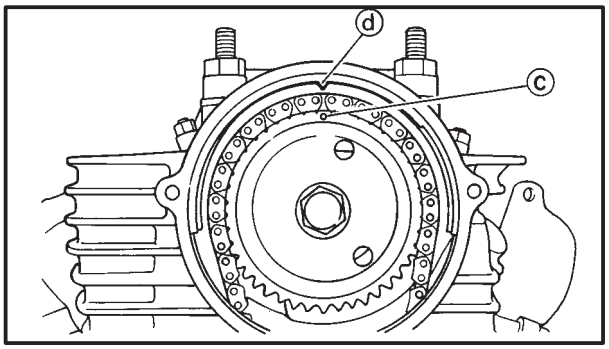

4. Check:
   - TDC on the compression stroke
     If the marks do not align → Adjust.

▼▼▼▼▼▼▼▼▼▼▼▼▼▼▼▼▼▼▼▼▼▼▼▼▼▼▼▼▼▼▼▼▼▼

a. Align the "T" mark ⓐ with the stationary pointer ⓑ on the left crankcase cover.
b. When the "T" mark is aligned with the stationary pointer, the punch mark ⓒ on the camshaft sprocket should be aligned with the stationary pointer ⓓ on the cylinder head.

▲▲▲▲▲▲▲▲▲▲▲▲▲▲▲▲▲▲▲▲▲▲▲▲▲▲▲▲▲▲▲▲▲▲

SHIFT SHAFT

SHIFT SHAFT AND STOPPER LEVER

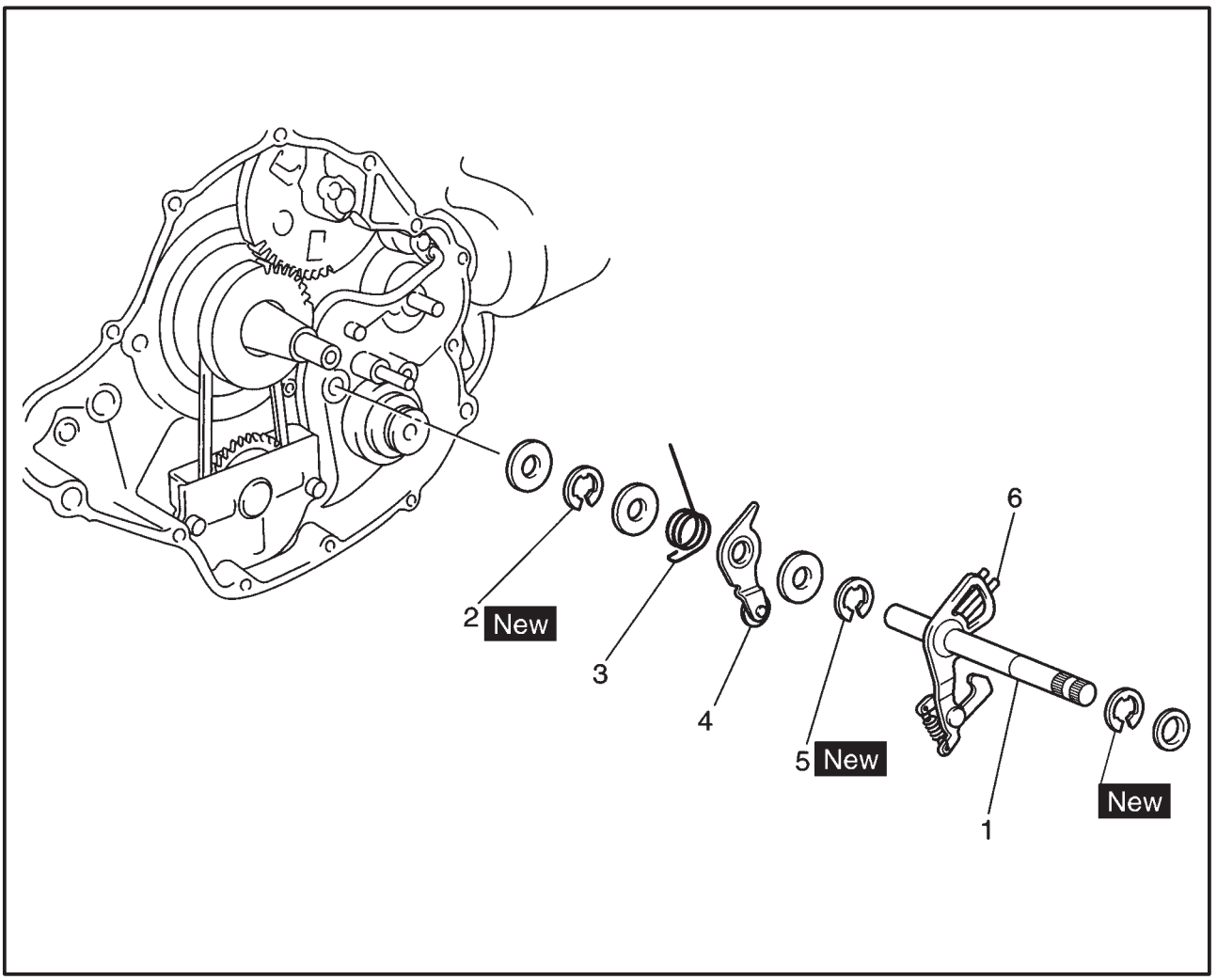

Order	Job name/Part name	Q'ty	Remarks
	Removing the shift shaft and stopper lever.		Remove the parts in the order listed.
	Engine oil		Refer to "ENGINE OIL REPLACEMENT" in CHAPTER 3.
	Left crankcase cover		Refer to "GENERATOR AND STARTER CLUTCH".
	Rotor assembly		
1	Shift shaft	1	Refer to "INSTALLING THE SHIFT SHAFT".
2	Circlip	1	
3	Torsion spring (stopper lever)	1	
4	Stopper lever	1	
5	Circlip	1	
6	Torsion spring (shift shaft)	1	
			For installation, reverse the removal procedure.

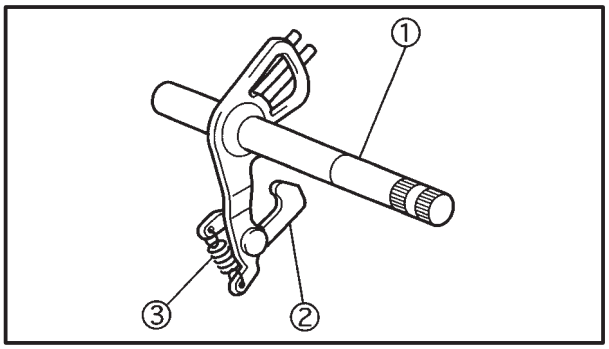

EAS00328

CHECKING THE SHIFT SHAFT

1. Check:
   - shift shaft ①
   - shift lever ②
     Bends/damage/wear → Replace.
   - shift lever spring ③
     Damage/wear → Replace.

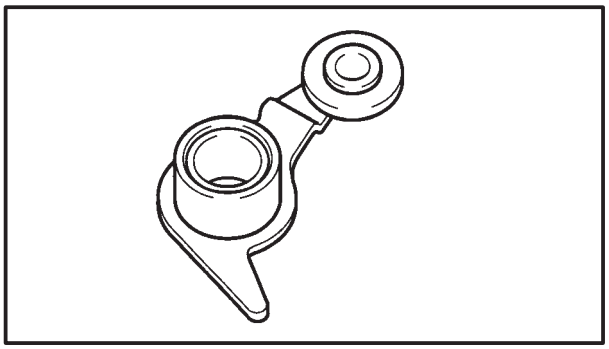

EB408410

CHECKING THE STOPPER LEVER

1. Check:
   - stopper lever
     Bends/damage → Replace.
     Roller turns roughly → Replace the stopper lever.

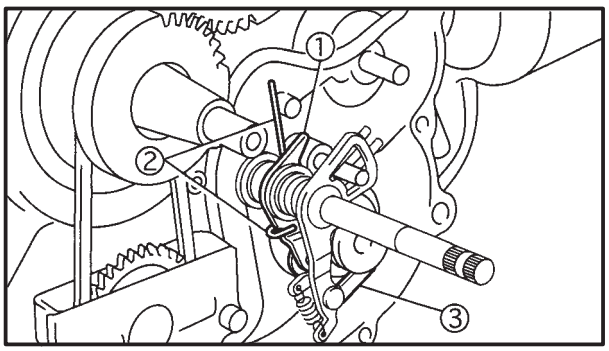

EAS00331

INSTALLING THE SHIFT SHAFT

1. Install:
   - stopper lever ①
   - stopper lever spring ②
   - shift shaft lever ③

NOTE:

- Hook the ends of the stopper lever spring onto the stopper lever and the crankcase boss.
- Mesh the stopper lever with the shift drum segment assembly.

OIL PUMP

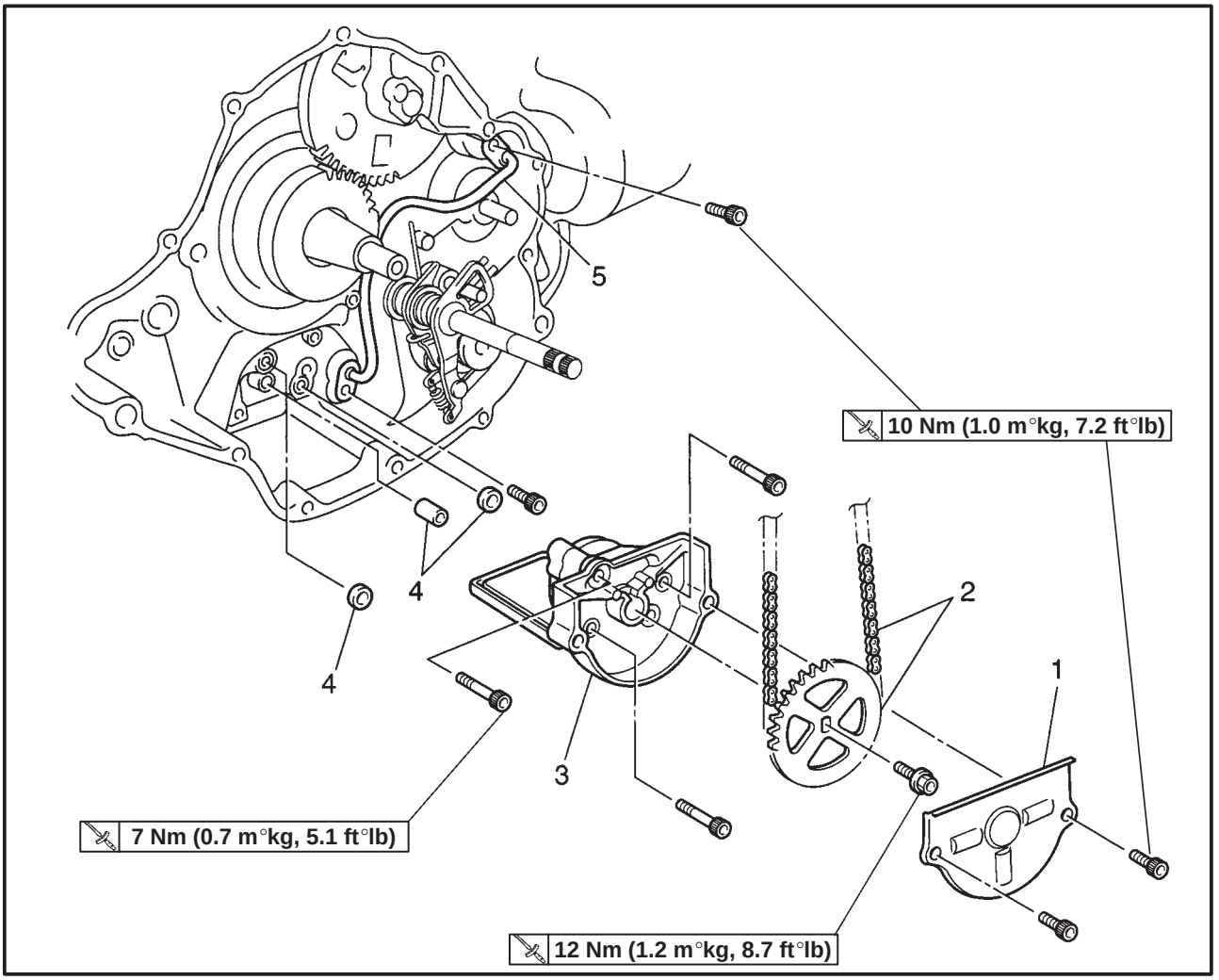

Order	Job name/Part name	Q'ty	Remarks
	Removing the oil pump		Remove the parts in the order listed.
	Rotor assembly		Refer to "GENERATOR AND STARTER CLUTCH".
	Crankcase cover (right)		Refer to " CLUTCH".
1	Driven gear cover	1	
2	Driven gear (oil pump)/Oil pump drive chain	1/1	
3	Oil pump assembly	1	
4	O-rings/dowel pin	2/1	
5	Oil delivery pipe	1	
			For installation, reverse the removal procedure.

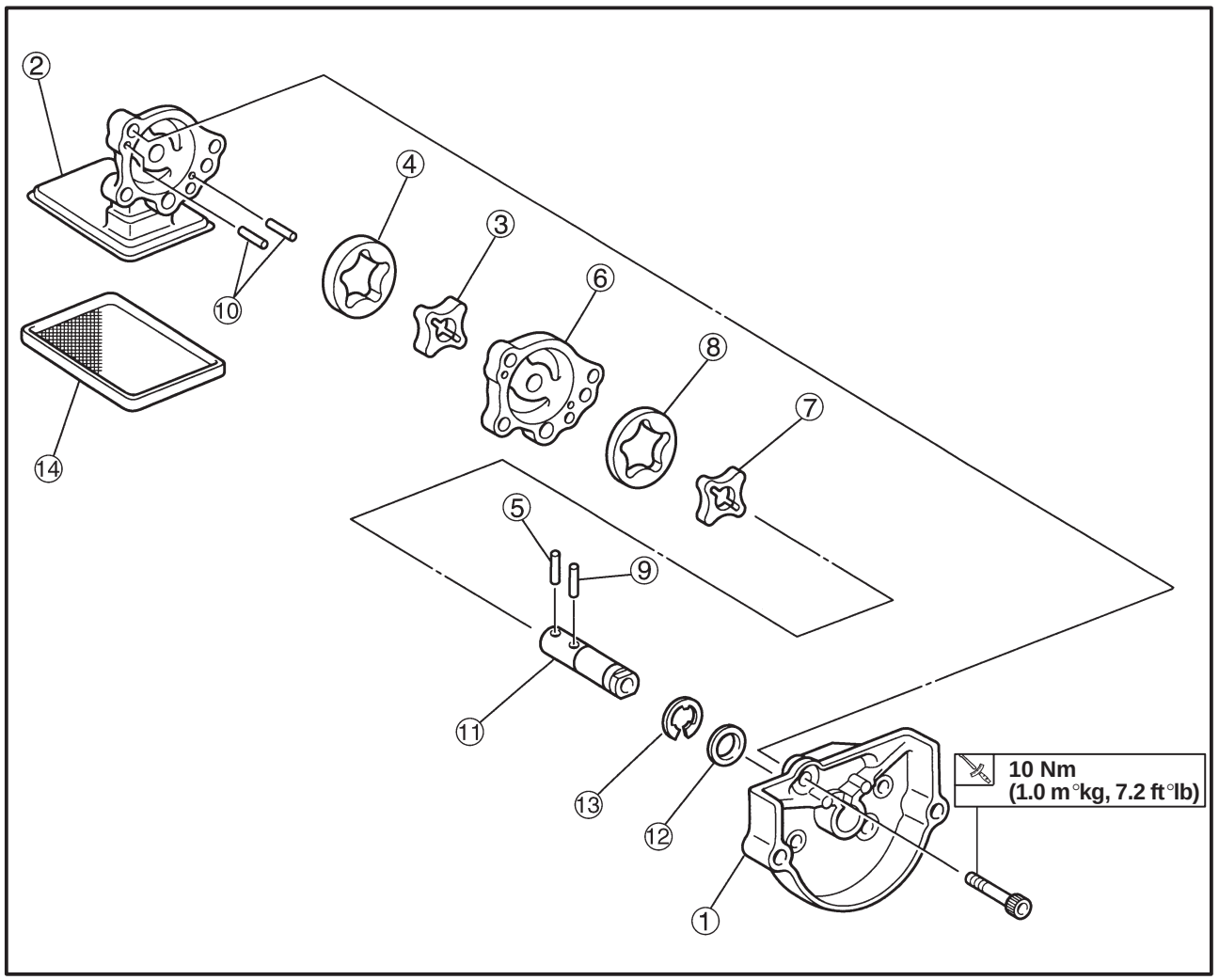

Order	Job name/Part name	Q'ty	Remarks
	Disassembling the oil pump		Disassembly the parts in the order listed.
①	Oil pump cover	1	
②	Oil pump body	1	
③	Oil pump rotor (inner)	1	Refer to "ASSEMBLING THE OIL PUMP".
④	Oil pump rotor (outer)	1	
⑤	Pin	1	
⑥	Oil pump body	1	
⑦	Oil pump rotor (inner)	1	Refer to "ASSEMBLING THE OIL PUMP".
⑧	Oil pump rotor (outer)	1	
⑨	Pin	1	
⑩	Dowel pins	2	
⑪	Oil pump shaft	1	
⑫	Washer	1	
⑬	Circlip	1	
⑭	Oil strainer	1	
			For assembly, reverse the disassembly procedure.

EAS00364

CHECKING THE OIL PUMP

1. Check:
   - oil pump driven gear
   - oil pump body
   - oil pump driven gear cover

   Cracks/damage/wear → Replace the defective part(-s).
2. Measure:
   - inner-rotor-to-outer-rotor-tip clearance ⓐ
   - outer-rotor-to-oil-pump-body-side clearance ⓑ
   - oil-pump-body-to-inner-rotor-and-outer-rotor clearance ⓒ

   Out of specification → Replace the oil pump.

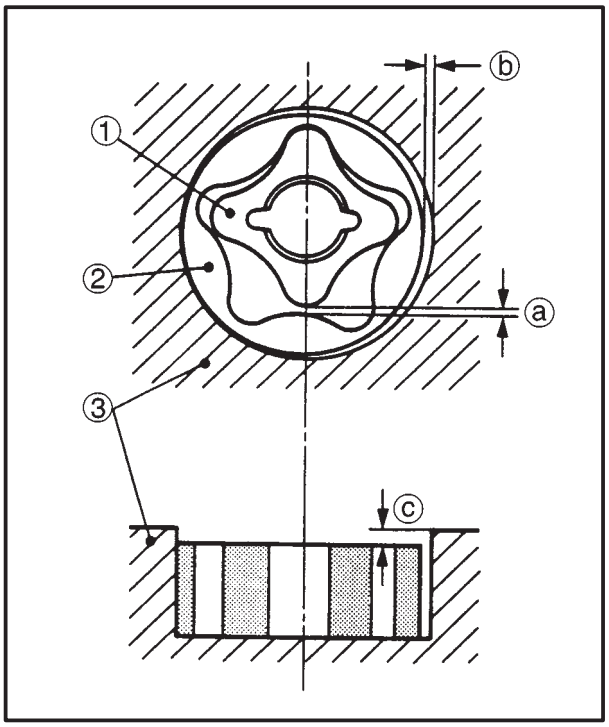

① Inner rotor
② Outer rotor
③ Oil pump body

Inner-rotor-to-outer-rotor-tip clearance
0.03 / 0.09 mm
(0.001 / 0.004 in)
<Limit>: 0.15 mm (0.006 in)
Outer-rotor-to-oil-pump-body-side clearance
0.03 / 0.08 mm
(0.001 / 0.003 in)
<Limit>: 0.15 mm (0.006 in)
Oil-pump-body-to-inner-rotor and outer-rotor clealance
0.03 / 0.08 mm
(0.001 / 0.003 in)
<Limit>: 0.15 mm (0.006 in)

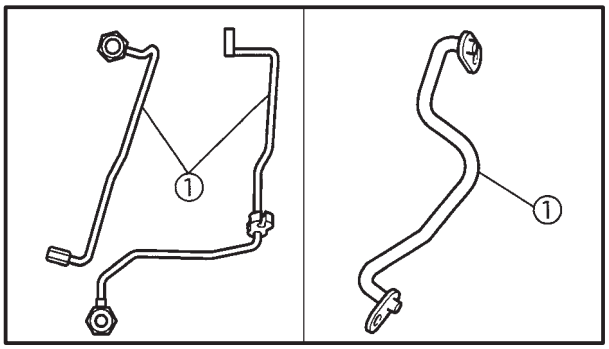

EAS00367

CHECKING THE OIL DELIVERY PIPES

The following procedure applies to all of the oil delivery pipes.

1. Check:
   - oil delivery pipes ①

   Damage → Replace.
   Obstruction → Wash and blow out with compressed air.

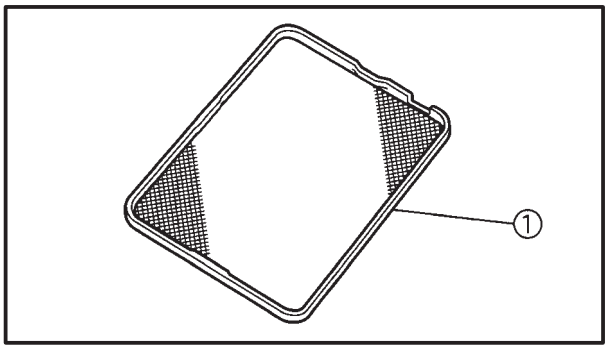

EAS00368

CHECKING THE OIL STRAINER

1. Check:
   - oil strainer ①

   Damage → Replace.
   Contaminants → Clean with engine oil.

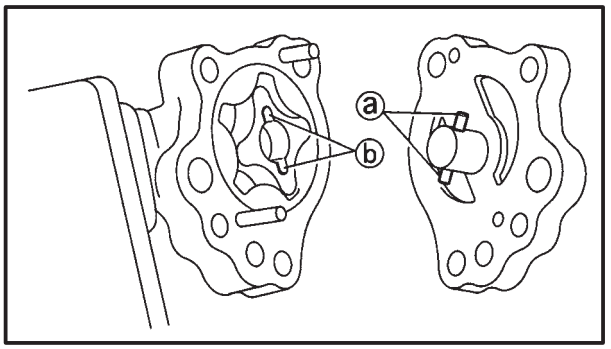

EAS00376

ASSEMBLING THE OIL PUMP

1. Assemble:
   °oil pump — **10 Nm (1.0 m°kg, 7.2 ft°lb)**

CAUTION:

After tightening the bolts, make sure that the oil pump turns smoothly.

NOTE:

Align the pin ⓐ with the slots ⓑ on the inner rotor.

CRANKSHAFT AND CONNECTING RODS
CRANKCASE

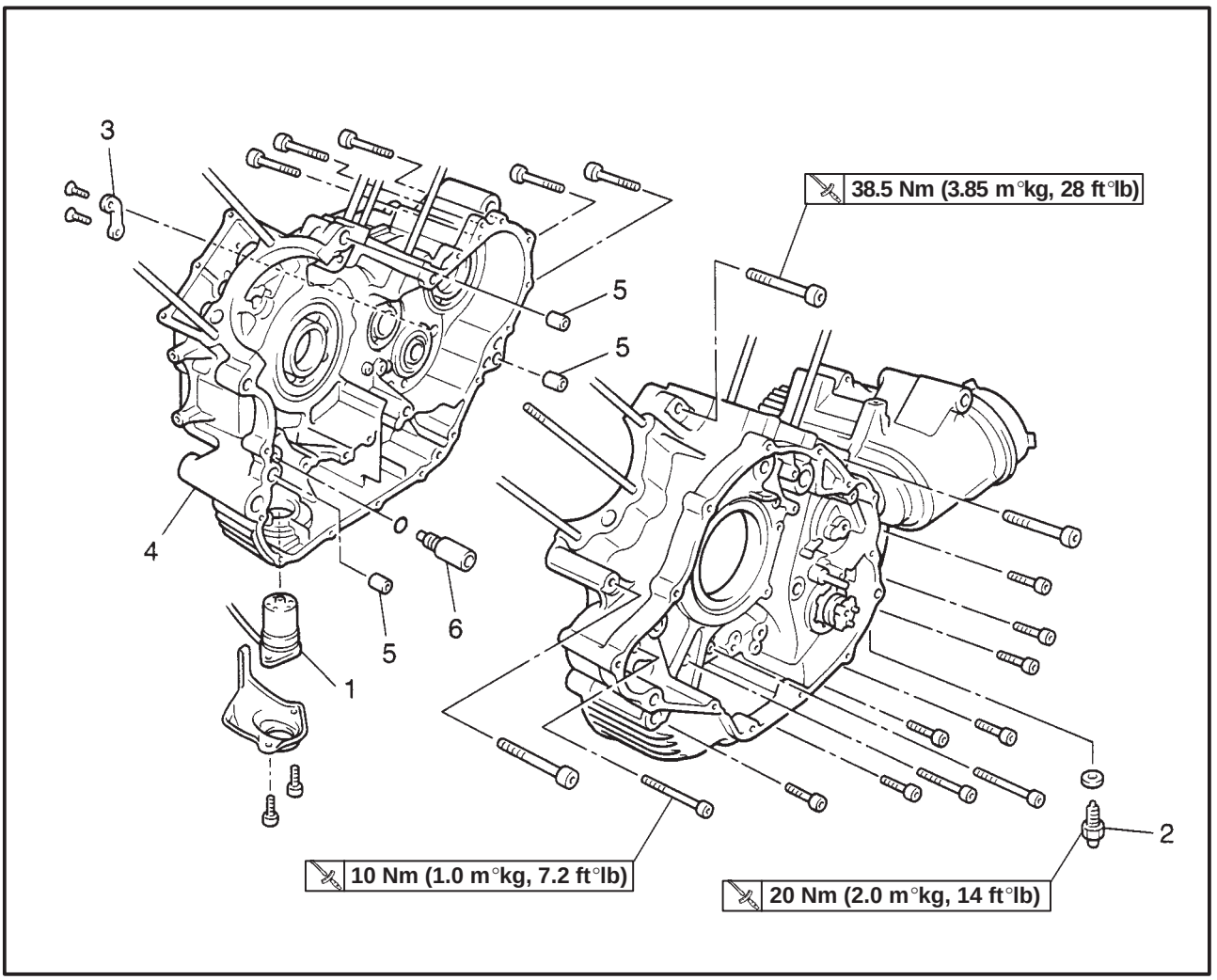

Order	Job name/Part name	Q'ty	Remarks
	Removing the crankcase assembly		Remove the parts in the order listed.
	Engine assembly		Refer to "ENGINE REMOVAL".
	Cylinder head		Refer to "CYLINDER HEADS".
	Cylinder and piston		Refer to "CYLINDERS AND PISTONS".
	Clutch assembly		Refer to "CLUTCH".
	AC magneto and starter clutch		Refer to "GENERATOR AND STARTER CLUTCH".
	Shift shaft		Refer to "SHIFT SHAFT".
	Oil pump assembly		Refer to "OIL PUMP".
1	Oil level gauge	1	
2	Neutral switch	1	
3	Shift shaft stopper plate	1	Refer to "ASSEMBLING THE CRANKCASE".
4	Crankcase (right)	1	Refer to "DISASSEMBLING/ASSEMBLING THE CRANKCASE".
5	Dowel pins	3	
6	Relief valve	1	
			For installation, reverse the removal procedure.

CRANKSHAFT AND CONNECTING RODS

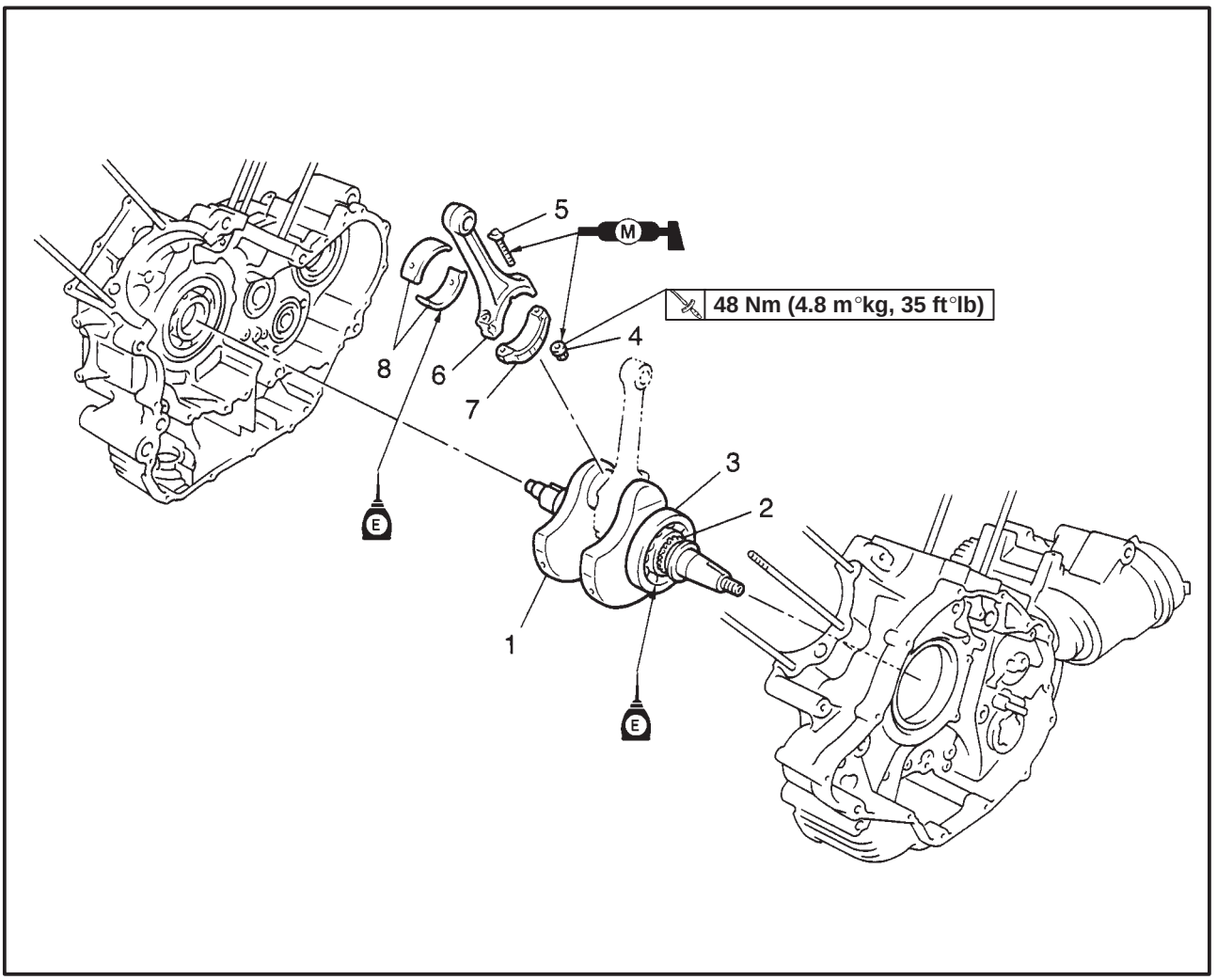

Order	Job name/Part name	Q'ty	Remarks
	Removing the crankshaft and connecting rod		Remove the parts in the order listed.
1	Crankshaft assembly	1	Refer to "REMOVING/INSTALLING THE CRANKSHAFT".
2	Oil pump drive sprocket	1	
3	Bearing	1	
4	Nuts (connecting rod caps)	4	Refer to "INSTALLING THE CRANKSHAFT".
5	Connecting rod bolts	4	
6	Connecting rods	2	
7	Connecting rod caps	2	Refer to "REMOVING THE CONNECTING RODS/INSTALLING THE CRANKSHAFT".
8	Plain bearings	4	
			For installation, reverse the removal procedure.

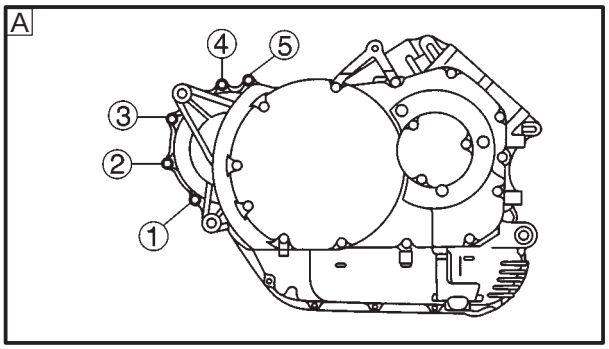

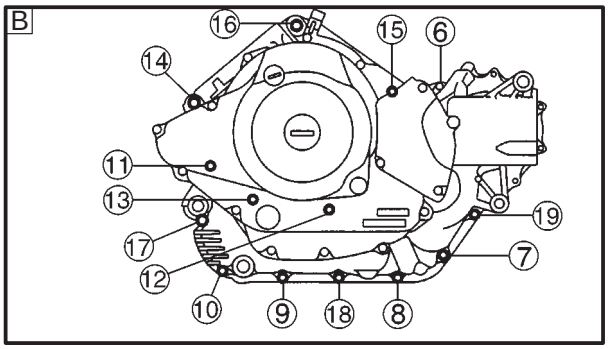

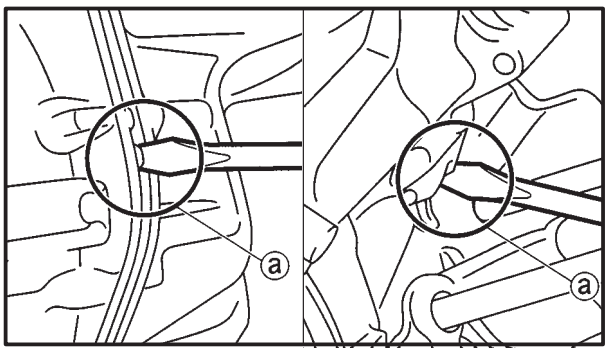

EAS00386

DISASSEMBLING THE CRANKCASE

1. Remove:
   - crankcase bolts

NOTE:

- Loosen each bolt 1/4 of a turn at a time, in stages and in a crisscross pattern. After all of the bolts are fully loosened, remove them.
- Loosen the bolts in decreasing numerical order (refer to the numbers in the illustration.)

A Right crankcase

B Left crankcase

2. Remove:
   - right crankcase

NOTE:

For this removal, slits ⓐ in the crankcase can be use as shown.

CAUTION:

Use a soft hammer to tap on one side of the crankcase. Tap only on reinforced portions of the crankcase. Do not tap on the crankcase mating surfaces. Work slowly and carefully. Make sure that the crankcase halves separate evenly.

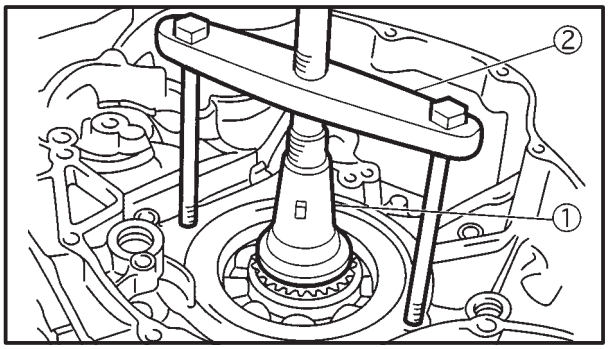

EB412111

REMOVING THE CRANKSHAFT ASSEMBLY

1. Remove:
   - crankshaft assembly ①

NOTE:

- Remove the crankshaft assembly with the crankcase separating tool ②.
- Make sure that the crankcase separating tool is centered over the crankshaft assembly.

	Crankcase separating tool **YU-01135-A, 90890-01135**

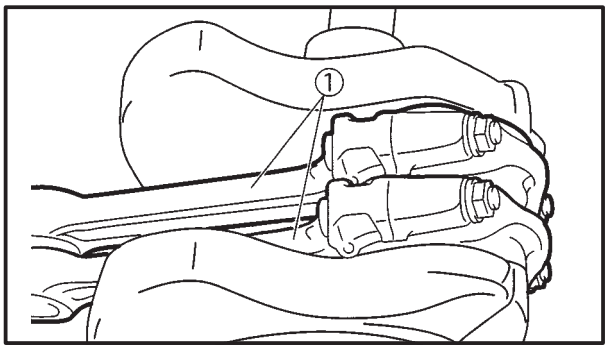

EB412121

REMOVING THE CONNECTING RODS

1. Remove:
   - connecting rods ①
   - big end bearings

NOTE:

Identify the position of each big end bearing so that it can be reinstalled in its original place.

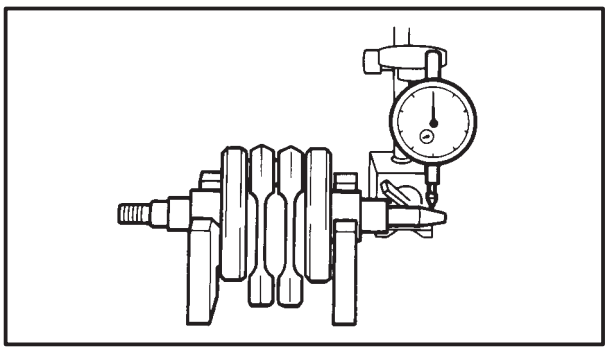

EB413404

CHECKING THE CRANKSHAFT AND CONNECTING RODS

1. Measure:
   - crankshaft runout
     Out of specification → Replace the crankshaft.

	Crankshaft runout **Less than 0.02 mm (0.009 in)**

2. Check:
   - crankshaft journal surfaces
   - crankshaft pin surfaces
   - bearing surfaces
     Scratches/wear → Replace the crankshaft.
3. Measure:
   - crankshaft-pin-to-big-end-bearing clearance
     Out of specification → Replace the big end bearings.

	Crankshaft-pin-to-big-end-bearing clearance **0.044 – 0.073 mm** **(0.0017 – 0.0029 in)**

▼▼▼

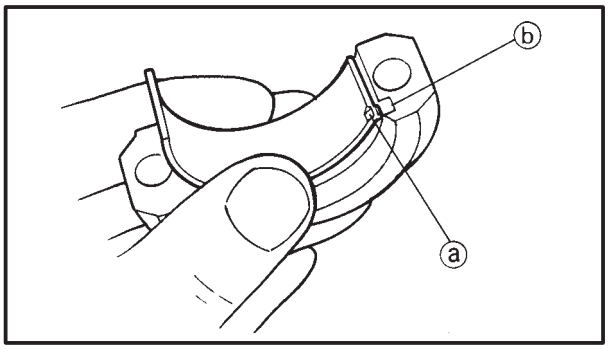

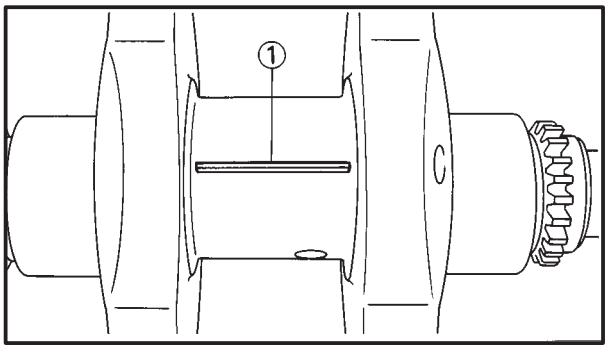

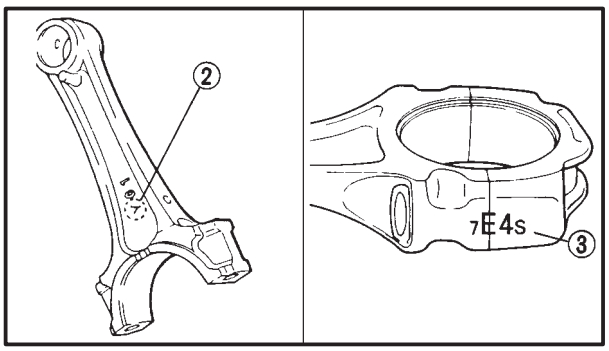

CAUTION:

Do not interchange the big end bearings and connecting rods. To obtain the correct crankshaft-pin-to-big-end-bearing clearance and prevent engine damage, the big end bearings must be installed in their original positions.

a. Clean the big end bearings, crankshaft pins, and the inside of the connecting rod halves.
b. Install the big end upper bearing into the connecting rod and the big end lower bearing into the connecting rod cap.

NOTE:

Align the projections ⓐ on the big end bearings with the notches ⓑ in the connecting rod and connecting rod cap.

c. Put a piece of Plastigauge® ① on the crankshaft pin.
d. Assemble the connecting rod halves.

NOTE:

° Do not move the connecting rod or crankshaft until the clearance measurement has been completed.
° Apply molybdenum disulfide grease onto the bolts, threads, and nut seats.
° Make sure that the "Y" mark ② on the connecting rod faces towards the left side of the crankshaft.
° Make sure that the characters ③ on both the connecting rod and connecting rod cap are aligned.

e. Tighten the connecting rod nuts.

CAUTION:

° When tightening the connecting rod nuts, be sure to use an F-type torque wrench.
° Without pausing, tighten the connecting rod nuts to the specified torque. Apply continuous torque between 43 and 48 Nm (4.3 √ 4.8 m°kg, 31 √ 35 ft°lb). Once you reach 43 Nm (4.3 m°kg, 31 ft°lb), DO NOT STOP TIGHTENING until the specified torque is reached.
If the tightening is interrupted between 43 and 48 Nm (4.3 √ 4.8 m°kg, 31 √ 35 ft°lb), loosen the connecting rod nut to less than 43 Nm (4.3 m°kg, 31 ft°lb) and start again.

Refer to “INSTALLING THE CONNECTING RODS”.

	Connecting rod nut **48 Nm (4.8 m°kg, 35 ft°lb)**

f. Remove the connecting rod and big end bearings.
   Refer to “REMOVING THE CONNECTING RODS”.
g. Measure the compressed Plastigauge® width ① on each crankshaft pin.
   If the clearance is out of specification, select replacement big end bearings.

▲▲▲▲▲▲▲▲▲▲▲▲▲▲▲▲▲▲▲▲▲▲▲▲▲▲▲▲▲▲

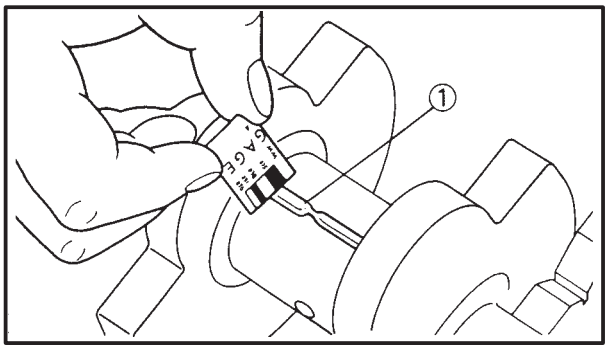

4. Select:
   °big end bearings (P_1,P_2)

NOTE:

°The numbers ① stamped into the crankshaft web and the numbers ② on the connecting rods are used to determine the replacement big end bearing sizes.
°“P_1,P_2” refer to the bearings shown in the crankshaft illustration.

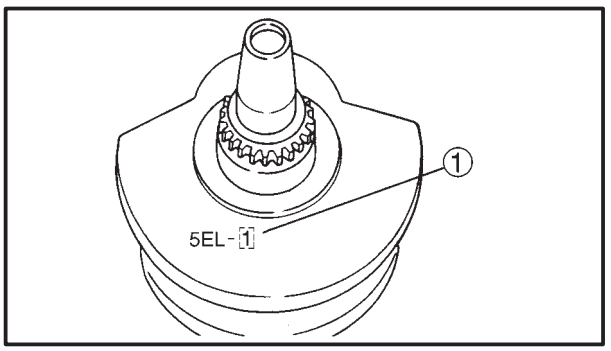

▼▼▼▼▼▼▼▼▼▼▼▼▼▼▼▼▼▼▼▼▼▼▼▼▼▼▼▼▼▼

For example, if the connecting rod “P_1” and the crankshaft web “P_1” numbers are “4” and “1” respectively, then the bearing size for “P_1” is:

Bearing size for “P_1”:
“P_1” (connecting rod) – “P_1” (crankshaft web) =
4 – 1 = 3 (brown)

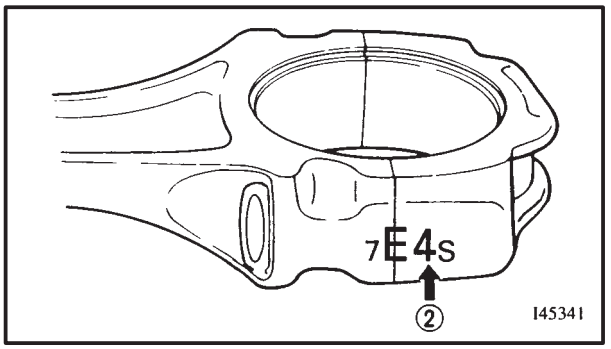

▲▲▲▲▲▲▲▲▲▲▲▲▲▲▲▲▲▲▲▲▲▲▲▲▲▲▲▲▲▲

Rear cylinder lower bearing/Front cylinder upper and lower bearing.

BEARING COLOR CODE	
1	blue
2	black
3	brown
4	green
5	yellow

Rear cylinder upper bearing

BEARING COLOR CODE	
1	black
2	
3	brown
4	green
5	

EB412440

CHECKING THE BEARINGS AND OIL SEALS

1. Check:
   - bearings
     Clean and lubricate the bearings, then rotate the inner race with your finger
     Rough movement → Replace.
2. Check:
   - oil seals
     Damage/wear → Replace.

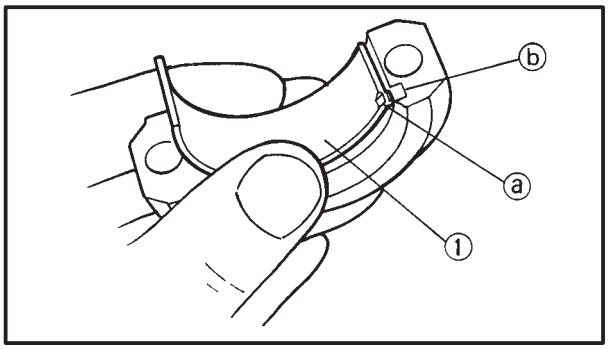

INSTALLING THE CRANKSHAFT

1. Install:
   - connecting rod bearings ①

NOTE:

- Align the projection ⓐ of the bearings with the notches ⓑ in the connecting rod cap.
- Install each bearing in its original place.

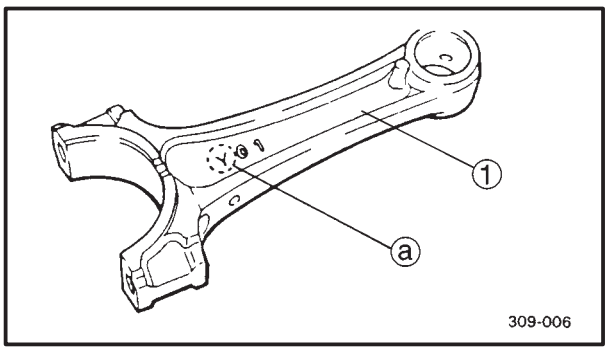

2. Install:
   - connecting rods ①

NOTE:

- The stamped "Y" mark ⓐ on the connecting rods should face towards the left side of the crankcase.
- Install each connecting rod in its original place.

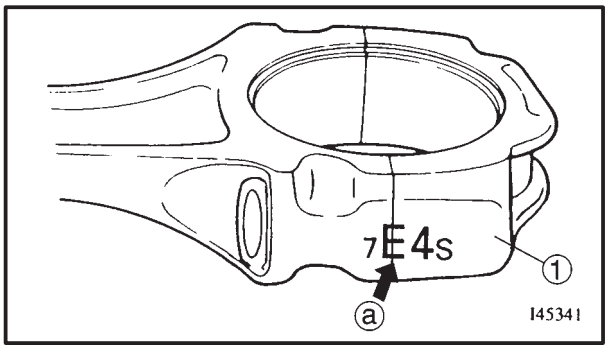

3. Install:
   - connecting rod cap ①

NOTE:

Be sure that the characters ⓐ on the side of the cap and connecting rod are aligned.

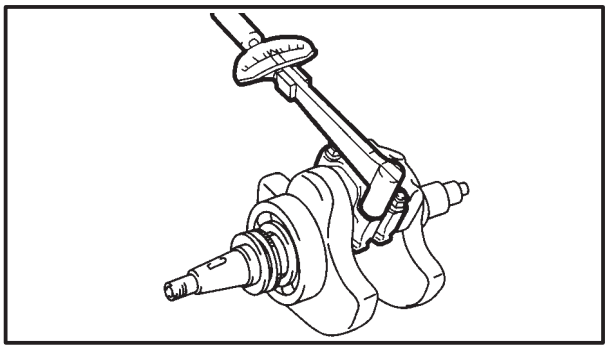

4. Tighten:
   - nuts (connecting rod cap)

	48 Nm (4.8 m·kg, 35 ft·lb)

NOTE:

Apply molybdenum disulfide grease to the rod cap bolt threads and nut surfaces.

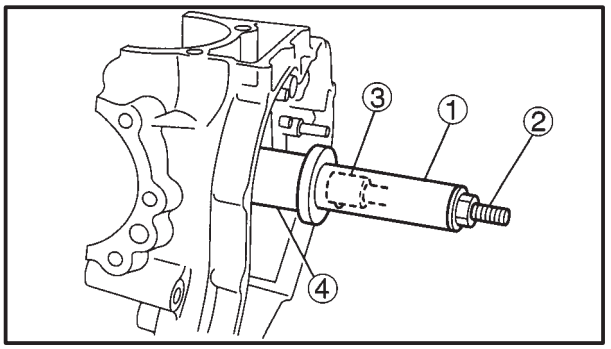

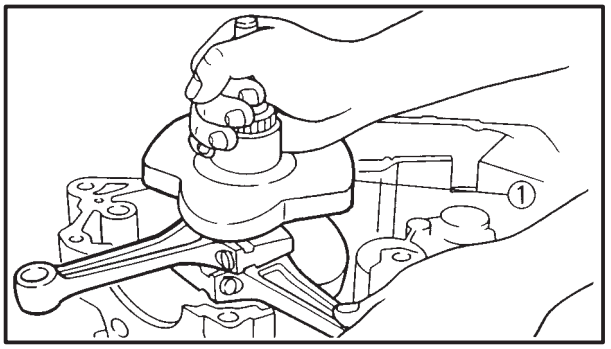

CAUTION:

- **When tightening the nuts be sure to use an F-type torque wrench.**
- **Without pausing tighten to full torque specification. Apply continuous torque between 43 and 48 Nm (4.3 √ 4.8 m•kg, 31 √ 35 ft•lb). Once you reach 43 Nm (4.3 m•kg, 31 ft•lb) DO NOT STOP TIGHTENING until final torque is reached. If the tightening is interrupted between 43 and 48 Nm (4.3 √ 4.8 m•kg, 31 √ 35 ft•lb), loosen the nut to less than 43 Nm (4.3 m•kg, 31 ft•lb) and start again.**

5. Install:
   - crankshaft installing tool

NOTE:

Attach the spacer to the bearing inner race.

Crankshaft installer pot ①
YU-90058
90890-01274
Crankshaft installer bolt ②
YU-90060
90890-01275
Adapter ③
YM-4059
90890-04130
Spacer ④
YU-90070
90890-04060

6. Install:
   - crankshaft ①

NOTE:

Align the left connecting rod with the rear cylinder sleeve hole.

ASSEMBLING THE CRANKCASE

1. Apply:
   - engine oil
     (onto the main journal bearings)
   - sealant
     (onto the crankcase mating surfaces)

Quick gasket®
Yamaha Bond No. 1215:
ACC-1100-15-01, 90890-85505

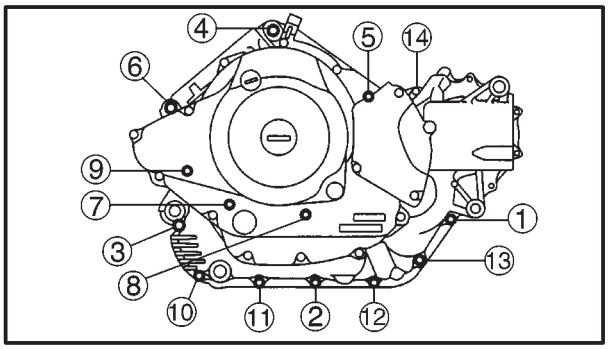

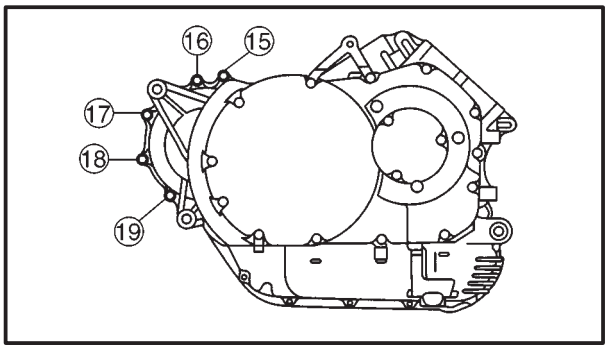

2. Tighten:
   - crankcase bolts
     (follow the proper tightening sequence)

NOTE:

The numbers embossed on the crankcase indicate the crankcase tightening sequence.

④ ~ ⑥ (M10) **38.5Nm (3.85 m°kg, 28 ft°lb)**
① ~ ③, ⑦ ~ ⑲ (M6) **10 Nm (1.0 m°kg, 7.2 ft°lb)**

NOTE:

- Lubricate the bolt threads with engine oil.
- Tighten the bolts in increasing numerical order.

M6 × 30 mm	①~③, ⑩ ~⑭, ⑰~⑲
M6 × 30 mm (Chromium plated bolt)	⑮, ⑯
M6 × 55 mm	⑧
M6 × 80 mm	⑦, ⑨
M10 × 60 mm	⑤
M10 × 70 mm	④
M10 × 100 mm	⑥

⑲: with engine ground lead

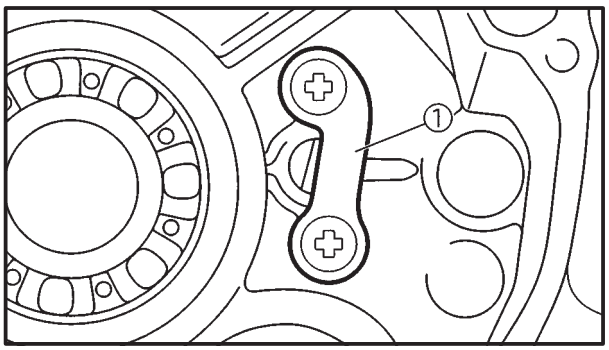

3. Install:
   - shift shaft stopper plate ①

NOTE:

Install the shift shaft stopper plate as shown.

TRANSMISSION

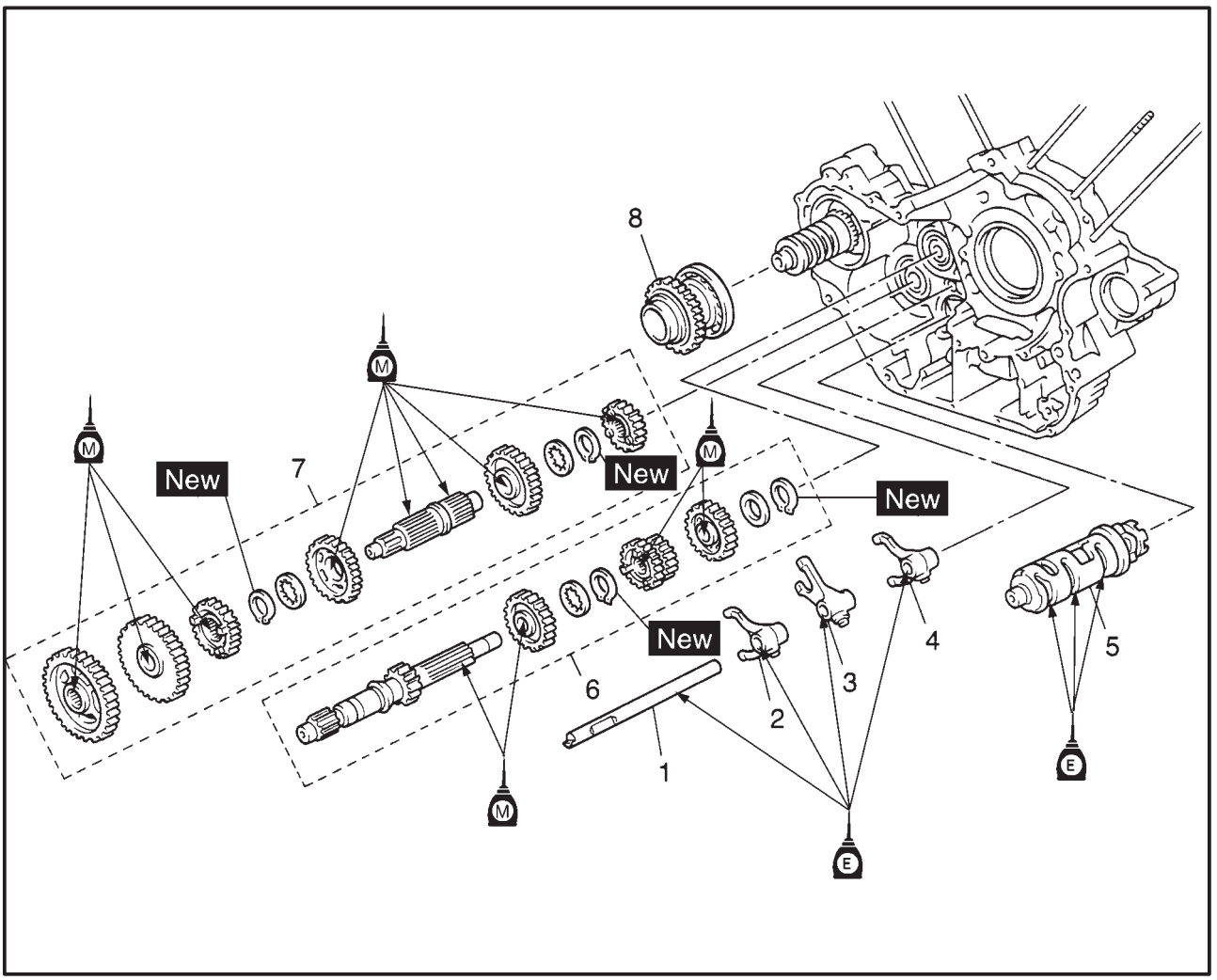

Order	Job name/Part name	Q'ty	Remarks
	Transmission removal		Remove the parts in the order listed.
	Crankcase separation		Refer to "CRANKSHAFT".
1	Guide bar	1	
2	Shift fork 1 "R"	1	
3	Shift fork 2 "C"	1	
4	Shift fork 3 "L"	1	Refer to "INSTALLING THE TRANSMISSION".
5	Shift drum	1	
6	Main axle assembly	1	
7	Drive axle assembly	1	
8	Middle driven gear	1	
			For installation, reverse the removal procedure.

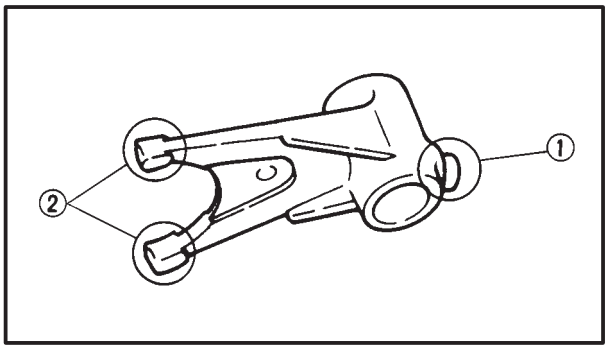

EAS00421

CHECKING THE SHIFT FORKS

The following procedure applies to all of the shift forks and related components.

1. Check:
   - shift fork cam follower ①
   - shift fork pawl ②
     Bends/damage/scoring/wear → Replace the shift fork.
2. Check:
   - shift fork guide bar
     Roll the shift fork guide bar on a flat surface.
     Bends → Replace.

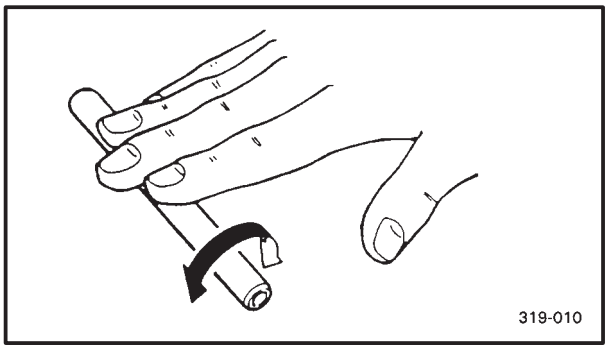

WARNING

Do not attempt to straighten a bent shift fork guide bar.

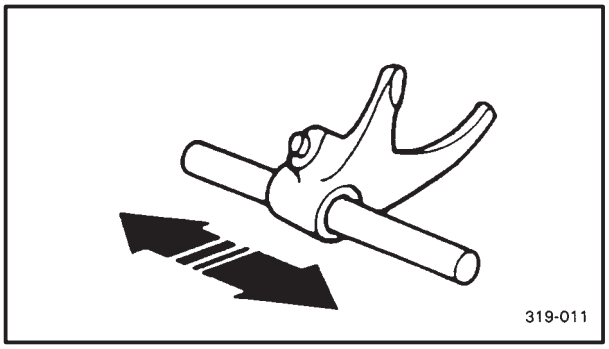

3. Check:
   - shift fork movement
     (on the shift fork guide bar)
     Rough movement → Replace the shift forks and shift fork guide bar as a set.

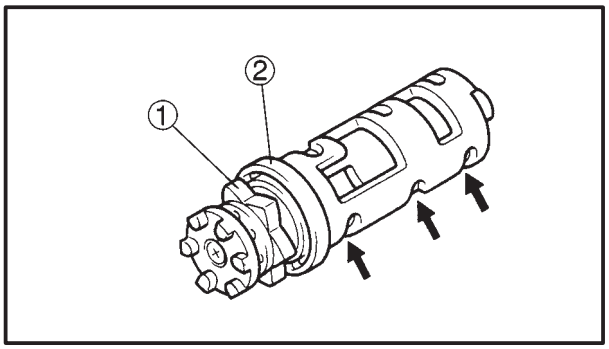

EAS00422

CHECKING THE SHIFT DRUM ASSEMBLY

1. Check:
   - shift drum grooves
     Damage/scratches/wear → Replace the shift drum.
   - shift drum segment ①
     Damage/wear → Replace.
   - shift drum bearing ②
     Damage/pitting → Replace.

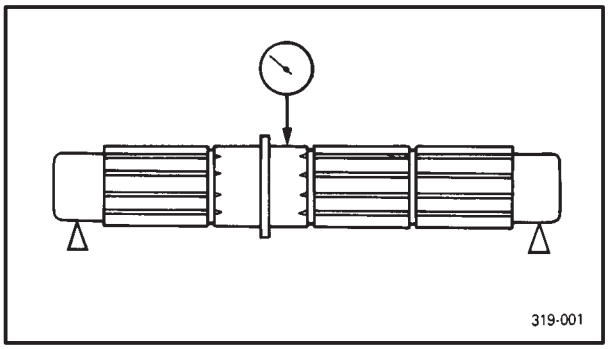

EAS00424

CHECKING THE TRANSMISSION

1. Measure:
   - main axle runout
     (with a centering device and dial gauge)
     Out of specification → Replace the main axle.

Main axle runout limit **0.08 mm (0.003 in)**

2. Measure:
   - drive axle runout
     (with a centering device and dial gauge)
     Out of specification → Replace the drive axle.

Drive axle runout limit **0.08 mm (0.003 in)**

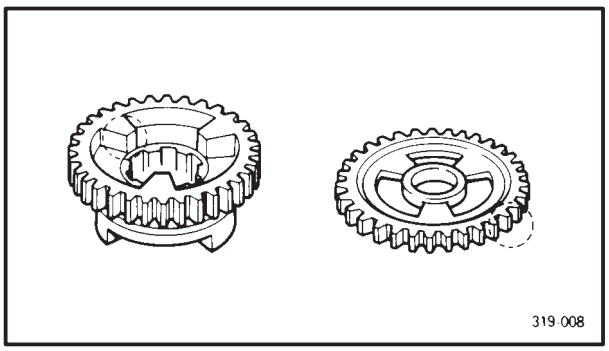

3. Check:
   - transmission gears
     Blue discoloration/pitting/wear → Replace the defective gear(-s).
   - transmission gear dogs
     Cracks/damage/rounded edges → Replace the defective gear(-s).

4. Check:
   - transmission gear movement
     Rough movement → Replace the defective part(-s).
5. Check:
   - washers
     Damage/bends/looseness → Replace.

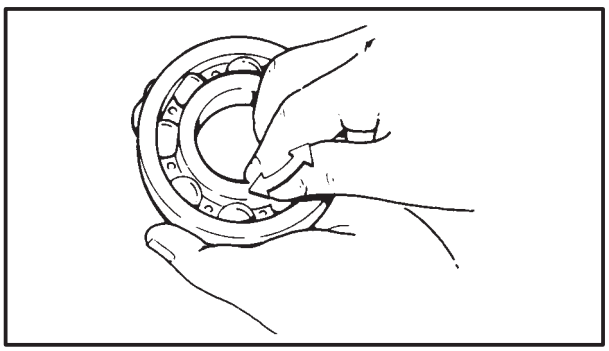

6. Check:
   - bearings
     Un smooth → Replace.

EAS00430

INSTALLING THE TRANSMISSION

1. Install:
   - shift drum assembly

NOTE:

Turn the shift drum assembly to the neutral position.

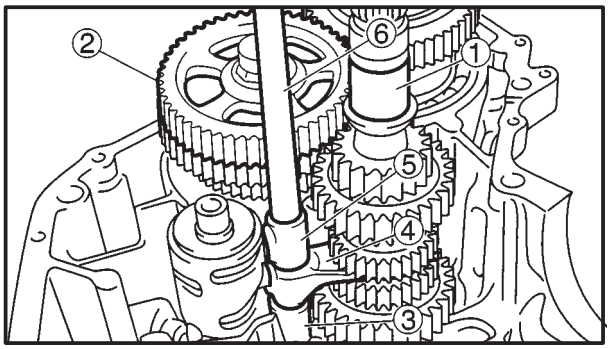

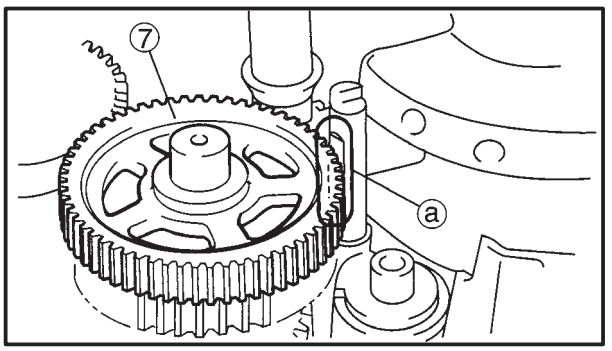

2. Install:
   - main axle assembly ①
   - drive axle assembly ②
   - shift fork “L” ③
   - shift fork “C” ④
   - shift fork “R” ⑤
   - shift fork guide bars ⑥

NOTE:

- The embossed marks on the shift forks should face towards the right side of the engine and be in the following sequence:
  “R”, “C”, “L”.
- When installing the middle drive gear ⑦, align the slit ⓐ on the guide bar with the middle drive gear.

⚠ WARNING

Always use new circlips.

3. Check:
   - transmission
     Rough movement → Repair.

NOTE:

Oil each gear, shaft, and bearing thoroughly.

MIDDLE GEAR
MIDDLE DRIVE PINION GEAR

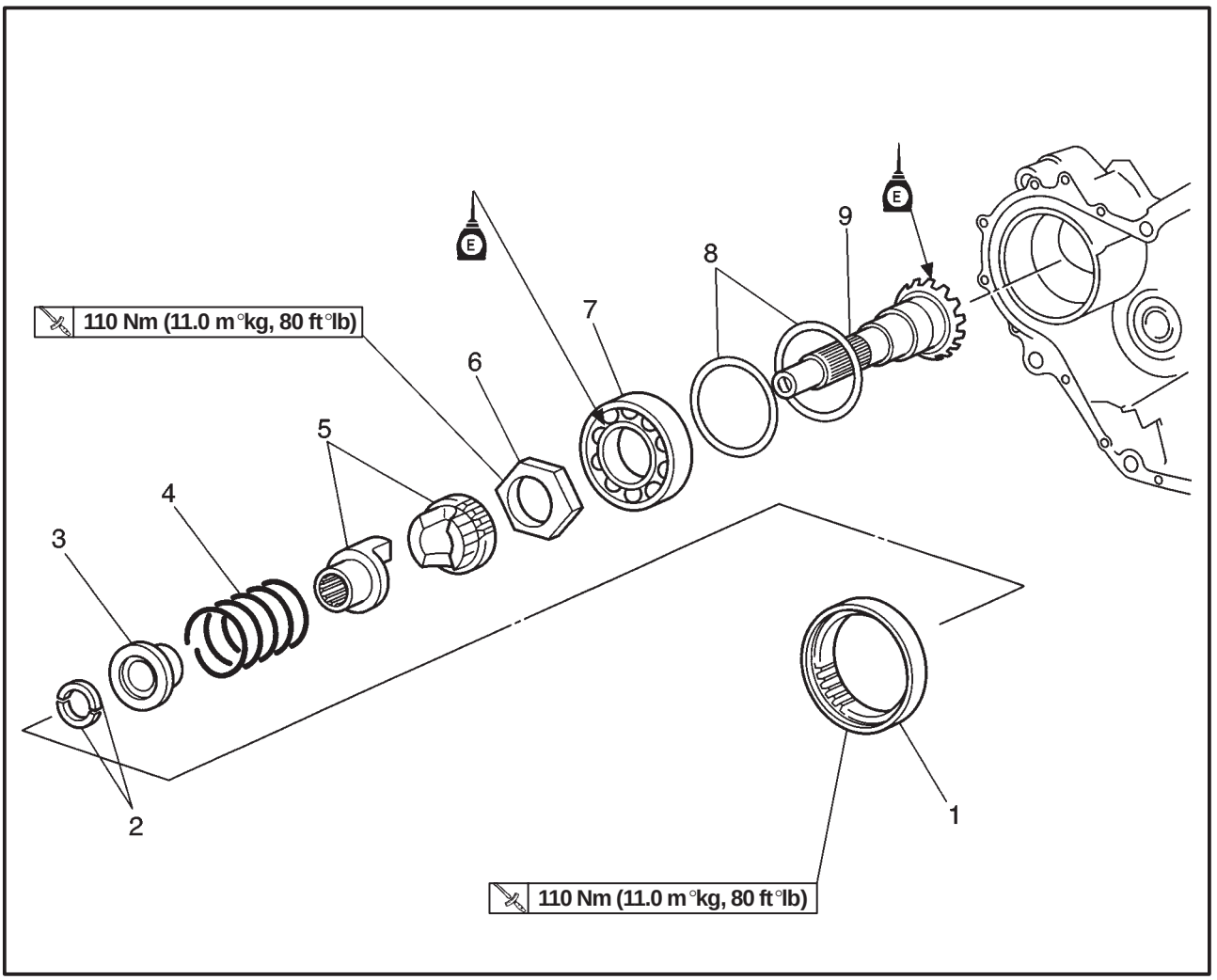

Order	Job name/Part name	Q'ty	Remarks
	Removing the middle drive pinion gear		Remove the parts in the order listed.
	Sepalate the crankcase		Refer to "CRANKSHAFT AND CONNECTING ROD."
1	Bearing retainer	1	Refer to "REMOVING THE MIDDLE DRIVE SHAFT ASSEMBLY/INSTALLING THE MIDDLE GEAR ASSEMBLY AND ADJUSTING THE BACKLASH".
2	Spring retainers	2	Refer to "DISASSEMBLING/ ASSEMBLING THE MIDDLE DRIVE SHAFT ASSEMBLY".
3	Spring seat	1	
4	Damper spring	1	
5	Damper cams	2	
6	Nut	1	
7	Bearing	1	
8	Shim(s)	1	
9	Middle drive pinion shaft	1	
			For installation, reverse the removal procedure.

MIDDLE DRIVEN PINION GEAR

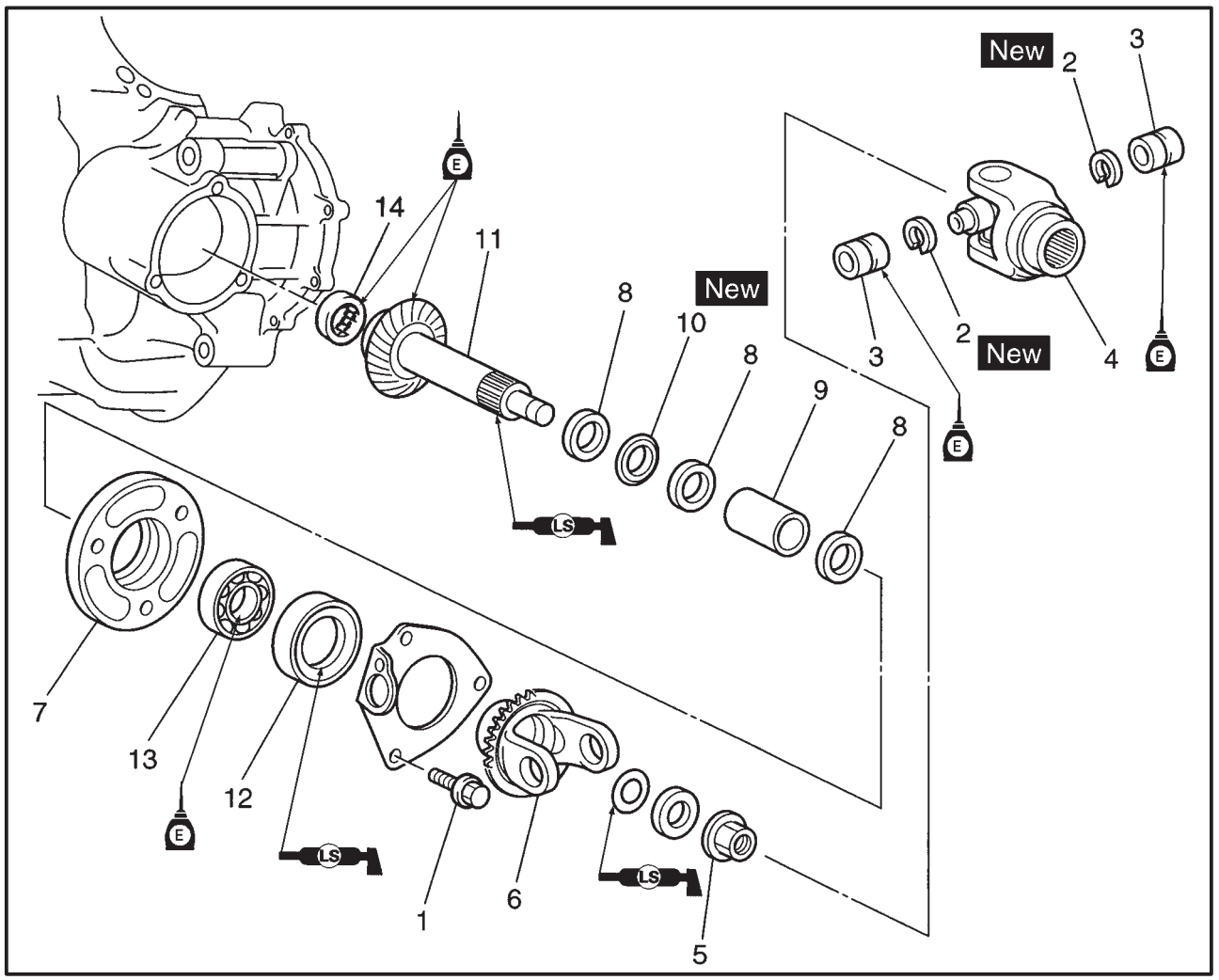

Order	Job name/Part name	Q'ty	Remarks
	Removing the middle driven pinion gear.		Remove the parts in the order listed.
1	Bolts	3	Refer to "REMOVING THE MIDDLE DRIVEN SHAFT ASSEMBLY/ INSTALLING THE UNIVERSAL JOINT".
2	Circlips	2	
3	Bearings	2	
4	Driven yoke	1	
5	Nut	1	Refer to "REMOVING THE MIDDLE DRIVEN SHAFT ASSEMBLY/INSTALING THE MIDDLE GEAR ASSEMBLY AND ADJUSTING THE BACKLASH".
6	Drive yoke	1	Refer to "INSTALLING THE MIDDLE GEAR ASSEMBLY AND ADJUSTING THE BACKLASH".
7	Bearing housing/O-ring	1/1	
8	Washers	3	
9	Collar	1	

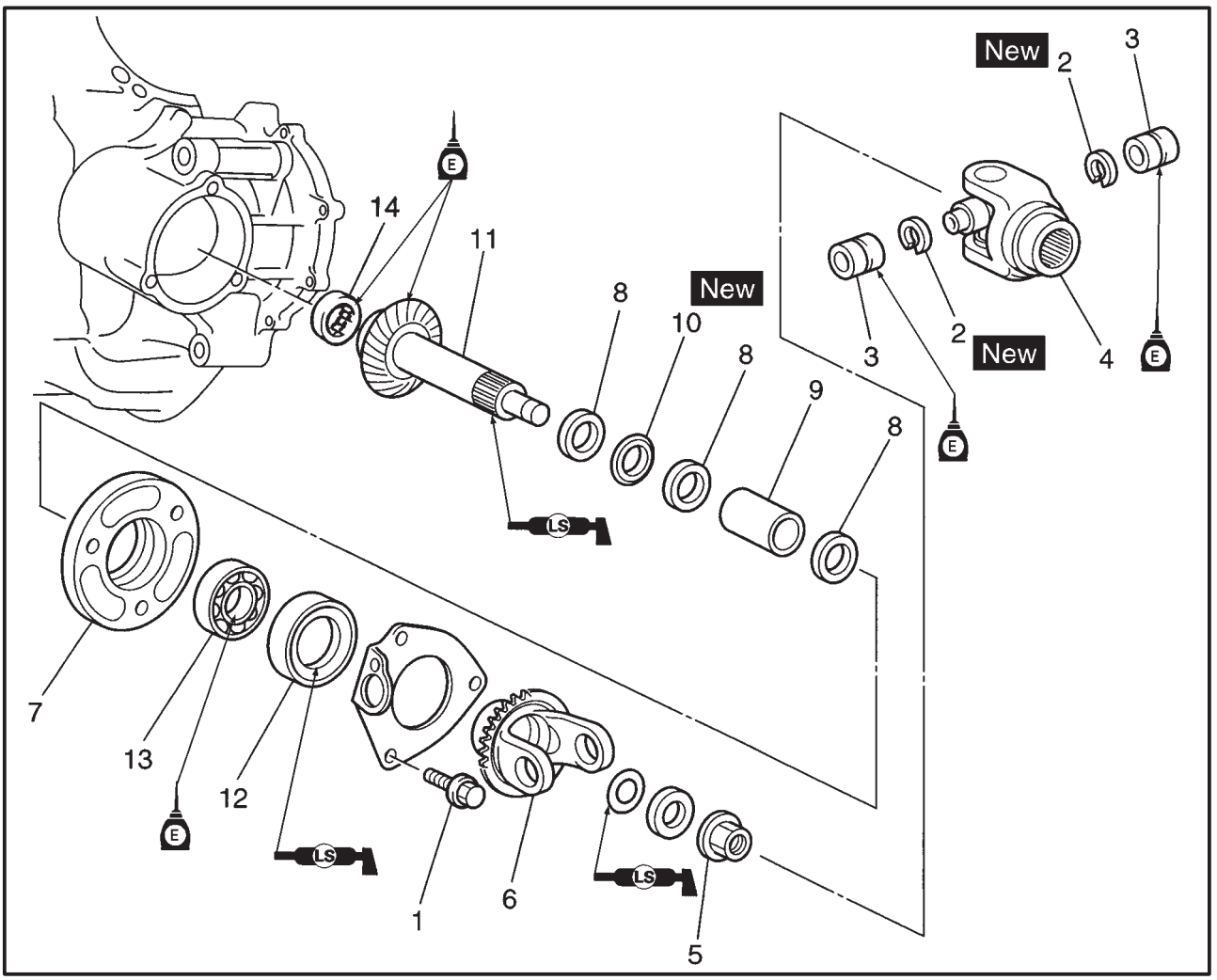

Order	Job name/Part name	Q'ty	Remarks
10	Collapsible collar	1	Refer to "INSTALLING THE MIDDLE GEAR ASSEMBLY AND ADJUSTING THE BACKLASH".
11	Middle driven shaft	1	
12	Oil seal	1	Refer to "ASSEMBLING THE MIDDLE DRIVEN SHAFT ASSEMBLY".
13	Bearing	1	
14	Bearing	1	
			For installation, reverse the removal procedure.

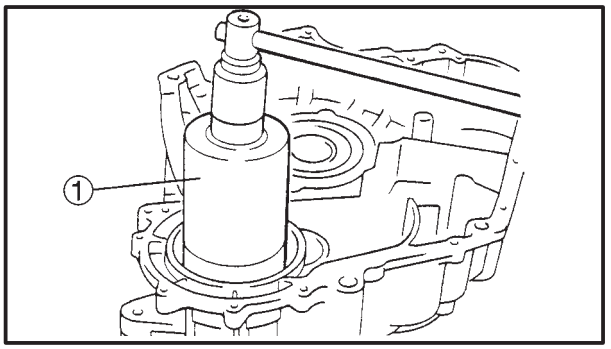

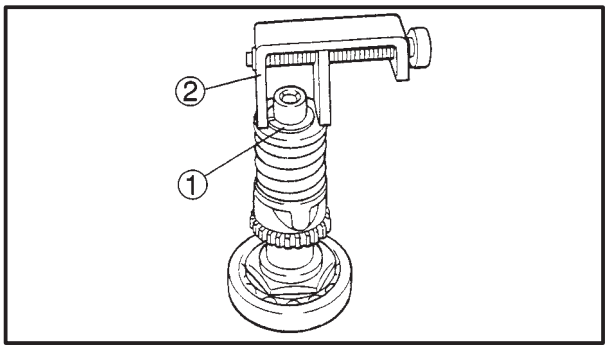

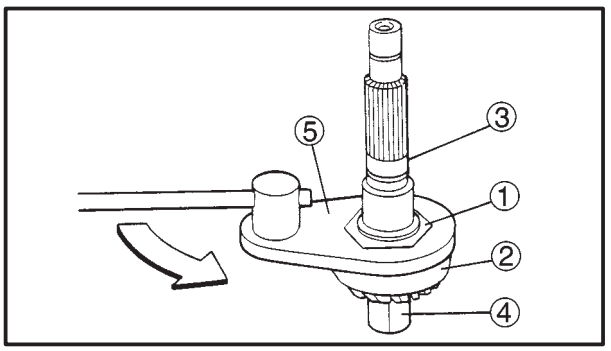

REMOVING THE MIDDLE DRIVE SHAFT ASSEMBLY

1. Remove:
   - bearing retainer
   - middle drive shaft assembly

▼▼▼▼▼▼▼▼▼▼▼▼▼▼▼▼▼▼▼▼▼▼▼▼▼▼▼▼▼▼▼▼

a. Straighten the thread on the bearing retainer.
b. Attach the bearing retainer wrench ①.

	Bearing retainer wrench: **YM-04137, 90890-04137**

c. Remove the bearing retainer and middle drive shaft assembly.

▲▲▲▲▲▲▲▲▲▲▲▲▲▲▲▲▲▲▲▲▲▲▲▲▲▲▲▲▲▲▲▲

DISASSEMBLING THE MIDDLE DRIVE SHAFT ASSEMBLY

1. Remove:
   - spring retainers ①

NOTE:

While compressing the spring with a damper spring compressor ②, remove the spring retainers.

	Damper spring compressor **YM-33286, 90890-04090**

2. Straighten the thread on the middle drive shaft nut.
3. Remove:
   - middle drive shaft nut ①
   - bearing ②
   - middle drive shaft ③

▼▼▼▼▼▼▼▼▼▼▼▼▼▼▼▼▼▼▼▼▼▼▼▼▼▼▼▼▼▼▼▼

a. Attach the middle drive shaft holder ④ onto the middle drive shaft as shown.

	Middle drive shaft holder **YM-04055, 90890-04055**

b. Secure the middle drive shaft holder in a vice.
c. Loosen the middle drive shaft nut with the middle drive shaft nut wrench ⑤.

	Middle drive shaft nut wrench **YM-04054, 90890-04138**

d. Remove the middle drive shaft nut and bearing.

▲▲▲▲▲▲▲▲▲▲▲▲▲▲▲▲▲▲▲▲▲▲▲▲▲▲▲▲▲▲▲▲

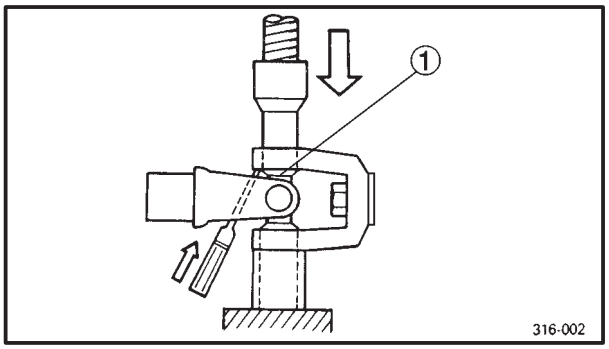

REMOVING THE MIDDLE DRIVEN SHAFT ASSEMBLY

1. Remove:
   - universal joint

▼▼▼▼▼▼▼▼▼▼▼▼▼▼▼▼▼▼▼▼▼▼▼▼▼▼▼▼▼▼▼▼

a. Remove the circlips ①.
b. Place the universal joint in a press.
c. With a pipe of the proper diameter positioned beneath the universal joint driven yoke as shown, press the bearing into the pipe.

NOTE:

It may be necessary to lightly tap the universal joint driven yoke.

d. Repeat the above steps to remove the opposite side's bearing.
e. Separate the universal joint yokes.

▲▲▲▲▲▲▲▲▲▲▲▲▲▲▲▲▲▲▲▲▲▲▲▲▲▲▲▲▲▲▲▲

2. Loosen:
   - middle driven shaft nut ①

NOTE:

While holding the universal joint driven yoke ② with the universal joint holder ③, loosen the middle driven shaft nut.

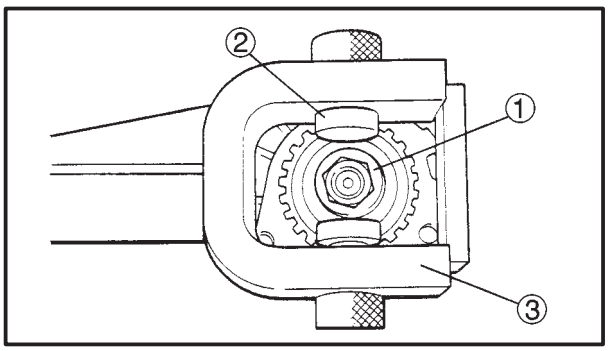

	Universal joint holder YM-04062, 90890-04062

EAS00438

CHECKING THE MIDDLE DRIVE SHAFT ASSEMBLY

1. Check:
   - damper cam surface
     Scratches/wear → Replace the damper cam.
2. Check:
   - spring
     Cracks/damage → Replace.

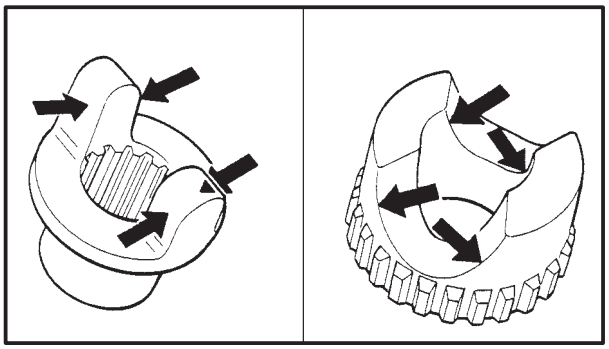

EAS00439

CHECKING THE MIDDLE DRIVEN SHAFT ASSEMBLY

1. Check:
   - middle drive gear ①
   - middle driven gear ②
     Galling/pitting/wear → Replace the middle driven shaft assembly.
2. Check:
   - bearings
     Damage/pitting → Replace the middle drive shaft bearing housing assembly.

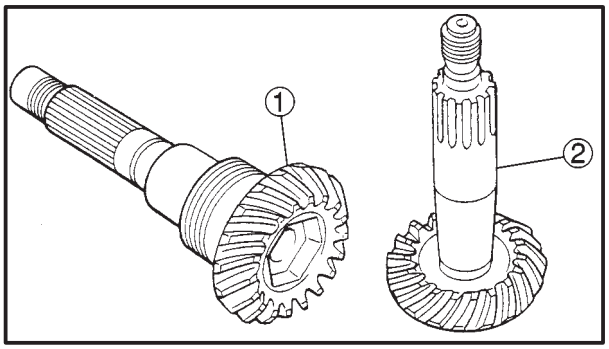

3. Check:
   °O-ring
   °oil seal
   Damage → Replace the defective part(-s).
4. Check:
   °universal joint movement
   Rough movement → Replace the universal joint.

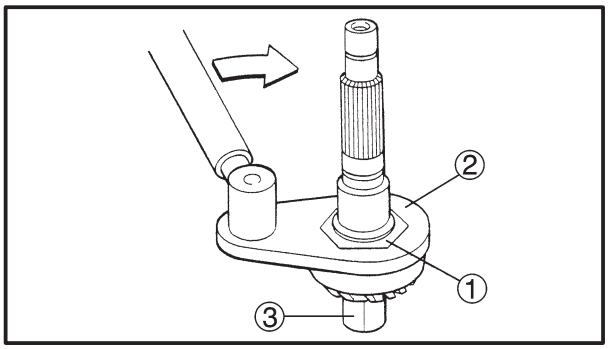

EAS00441

ASSEMBLING THE MIDDLE DRIVE SHAFT ASSEMBLY

1. Tighten:
   °middle drive shaft nut ①

110 Nm (11.0 m°kg, 80 ft°lb)

NOTE:

°Set the torque wrench at a right angle to the middle drive shaft nut wrench ②.
°Lock the threads on the middle drive shaft nut by staking them with a center punch.

Middle drive shaft nut wrench ②
YM-04054, 90890-04138
Middle drive shaft holder ③
YM-04055, 90890-04055

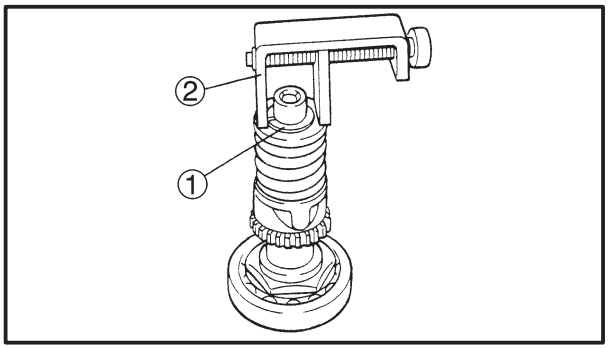

2. Install:
   °spring retainers ①

NOTE:

While compress the spring with the damper spring compressor ②, and then install the spring retainers.

Damper spring compressor
YM-33268, 90890-04090

ASSEMBLING THE MIDDLE DRIVEN SHAFT ASSEMBLY

NOTE:

The following points are critical when assembling the middle gears:
- The collapsible collar must be replaced whenever the middle driven shaft assembly is removed from the middle driven shaft bearing housing.
- When performing this procedure for the first time, be sure to have at least one extra collapsible collar on hand.

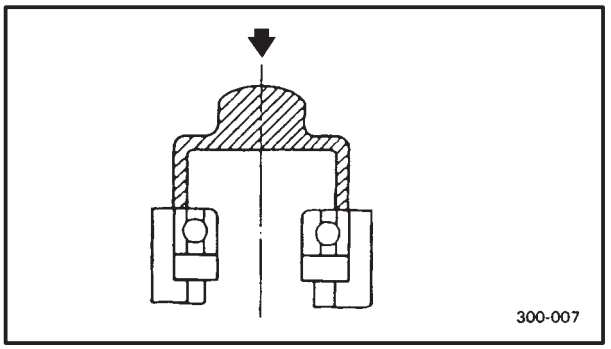

1. Install:
   - bearing outer race
     (into the middle driven shaft bearing housing)

WARNING

Do not press the bearing outer race. During installation, always press the bearing inner race carefully.

2. Install:
   - middle driven shaft nut

NOTE:

Finger tighten the middle driven shaft mut.

INSTALLING THE MIDDLE GEAR ASSEMBLY AND ADJUSTING THE BACKLASH

NOTE:

When installing the middle gear assembly, be sure to replace the following parts:
- collapsible collar

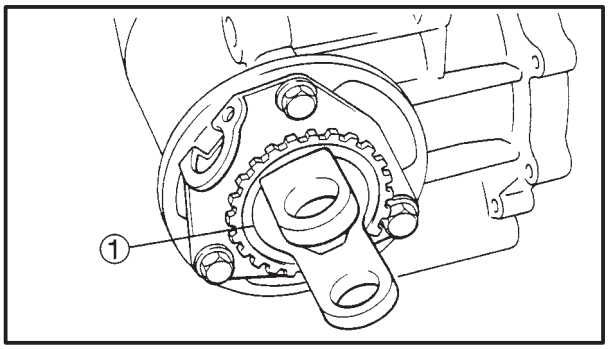

1. Install:
   - middle driven shaft assembly ①

25 Nm (2.5 m·kg, 18 ft·lb)

2. Install:
   °shim
   °middle drive shaft assembly

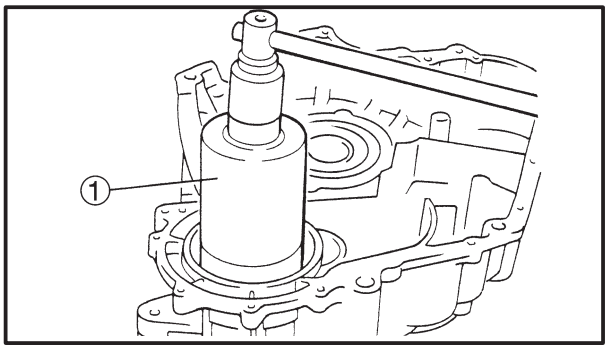

3. Install:
   °bearing retainer

▼▼▼▼▼▼▼▼▼▼▼▼▼▼▼▼▼▼▼▼▼▼▼▼▼▼▼▼▼▼▼▼

Install steps:

°Attach the bearing retainer wrench ①.

	Bearing retainer wrench: **YM-04137, 90890-04137**

°Tighten the bearing retainer.

	Bearing retainer: **110 Nm (11.0 m°kg, 80 ft°lb)**

°Lock the threads on the bearing retainer by staking them with a center punch.

▲▲▲▲▲▲▲▲▲▲▲▲▲▲▲▲▲▲▲▲▲▲▲▲▲▲▲▲▲▲▲▲

4. Adjust:
   °middle gear backlash

	Middle gear backlash: **0.1 √ 0.2 mm (0.72 √ 1.45 in)**

▼▼▼▼▼▼▼▼▼▼▼▼▼▼▼▼▼▼▼▼▼▼▼▼▼▼▼▼▼▼▼▼

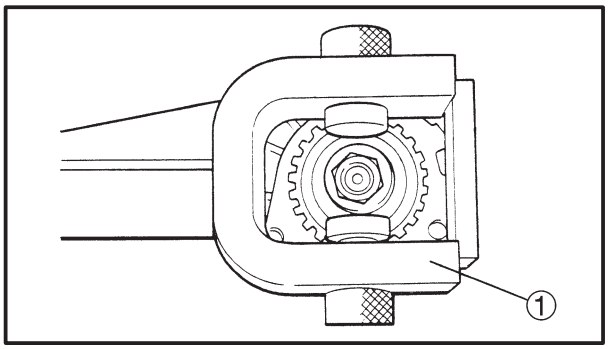

a. Install the universal joint holder ① and middle gear backlash band ② as shown.

	Universal joint holder **YM-04062, 90890-04062** **Middle gear backlash band** **YM-01231, 90890-01231**

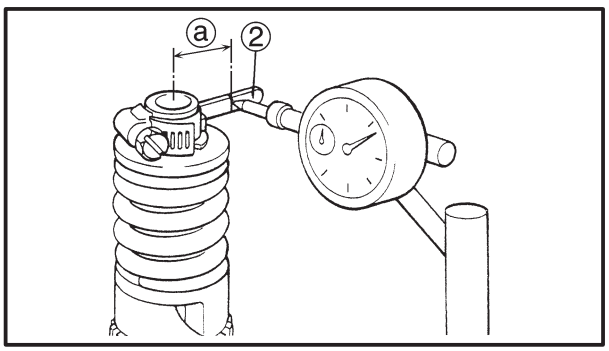

b. Make sure that the dial gauge plunger on the middle gear backlash band as shown.
   ⓐ Dial-gauge-plunger contact point:
   68.2 mm (2.69 in)

	Dial gauge **YU-03097, 90890-03097**

c. Remove the middle driven pinion gear nut and apply the LOCKTITE® on it.
d. Reinstall the middle driven pinion gear nut.
e. While measure the middle gear backlash, tighten the middle driven pinion gear nut until specific backlash.

CAUTION:

Do not over tighten the middle driven pinion gear nut. If over tighten the middle driven pinion gear nut, replace the collapsible collar and adjust the backlash.

f. Stake the middle driven pinion gear shaft thread.

▲▲▲▲▲▲▲▲▲▲▲▲▲▲▲▲▲▲▲▲▲▲▲▲▲▲▲▲▲▲▲▲

INSTALLING THE UNIVERSAL JOINT

4. Install:
   - universal joint driven yoke/cross joint①
     (into the universal joint drive yoke)

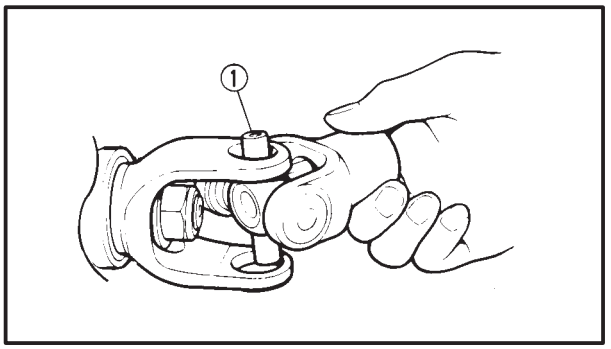

CAUTION:

Do not hammer the universal joint drive yoke or the collapsible collar may be distorted. This will result in a change in the standard spinning torque, requiring replacement of the collapsible collar and reassembly of the middle driven shaft assembly.

2. Install:
   - bearings ②
     (onto the universal joint driven yoke/cross joint)

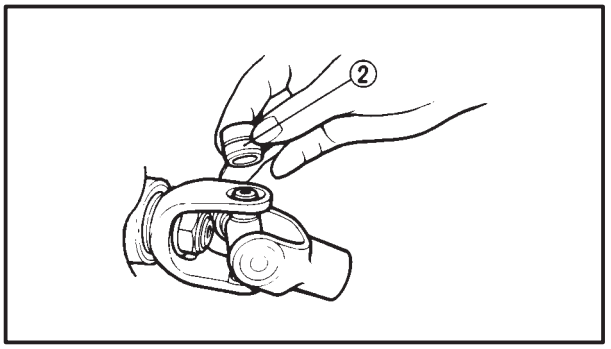

CAUTION:

The needles can easily fall out of their races, so check each bearing carefully. Slide the universal joint driven yoke assembly back and forth on the bearings. If a needle is out of place, the yoke will not go all the way onto the bearings.

3. Press each bearing into the universal joint driven yoke assembly with a socket of the proper size.

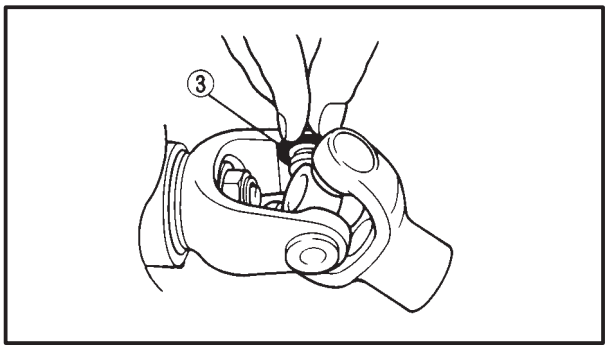

NOTE:

The bearings must be inserted far enough into the universal joint driven yoke assembly so that circlips ③ can be installed.

EAS00452

ALIGNING THE MIDDLE GEAR

NOTE:

Aligning the middle gear is necessary when any of the following parts are replaced:
°Crankcase
°Middle drive shaft

1. Select:
   °middle drive gear shim(-s) ①

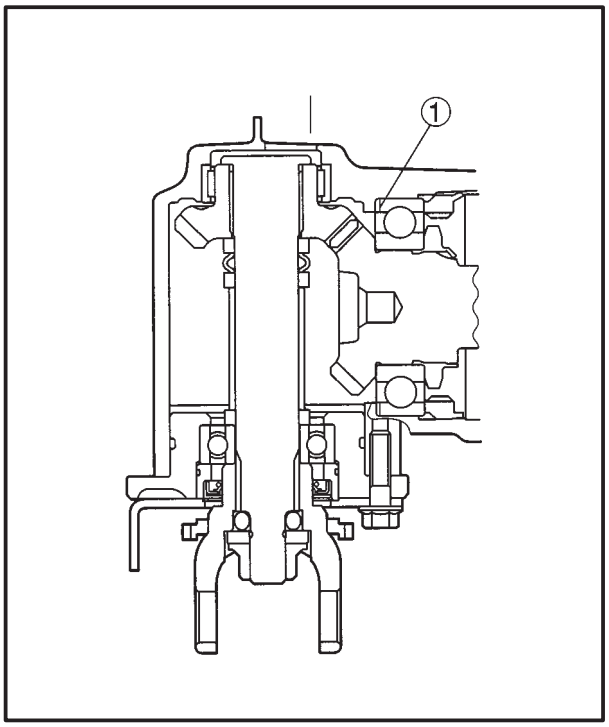

NOTE:

Select the middle drive gear shim(-s) ① by calculating the middle drive gear shim thickness and then measuring the middle gear backlash.

▼▼▼▼▼▼▼▼▼▼▼▼▼▼▼▼▼▼▼▼▼▼▼▼▼▼▼▼▼▼▼▼▼▼

a. Position the middle drive gear with the appropriate shim(-s) ① that has had its respective thickness calculated from information marked on the crankcase and the end of the middle drive gear.
b. To find middle drive gear shim thickness "A", use the following formula.

Middle drive gear shim thickness
"A" = ⓐ – ⓒ

ⓐ ="43.00"
ⓑ =a numeral on the upper crankcase near the main bearing selection numbers and which is added to the nominal size "42"

Example:
ⓐ is 43.00
If the upper crankcase is marked "46" ⓑ
ⓒ is 42.46 (i.e., 42.00 + 0.46 =42.46)
"A" = 43.00 – 42.46 = 0.54
Round off to the hundredths digit and select the appropriate shim(-s).

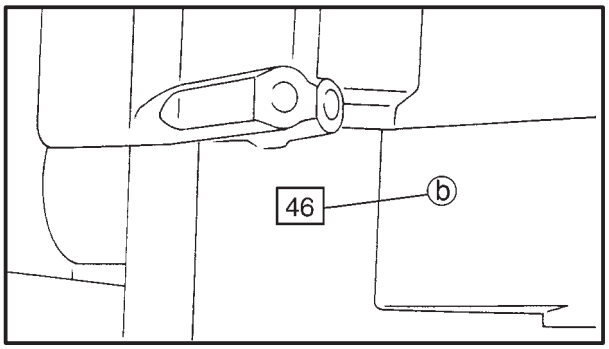

NOTE:

In the above example, the calculated number is 0.54. The chart instructs you to round off the 4 to 5. Thus, the shim thickness is 0.55 mm.

Hundredths	Rounded value
0, 1, 2	0
3, 4, 5, 6,	5
7, 8, 9	10

Shims are supplied in the following thickness.

Middle drive pinion gear shim:	
Thickness (mm)	0.10, 0.15, 0.20

CHAPTER 5
CARBURETION

CARBURETOR 5-1
CHECKING THE CARBURETORS 5-4
ASSEMBLING THE CARBURETORS 5-6
INSTALLING THE CARBURETORS 5-6
MEASURING AND ADJUSTING THE FUEL LEVEL 5-7
CHECKING AND ADJUSTING THE THROTTLE POSITION SENSOR 5-8

AIR INDUCTION SYSTEM (AIS) 5-10
AIR INDUCTION 5-10
AIR CUT-OFF VALVE 5-10
AIR INDUCTION SYSTEM INSPECTION 5-11

CARBURETION

CARBURETOR

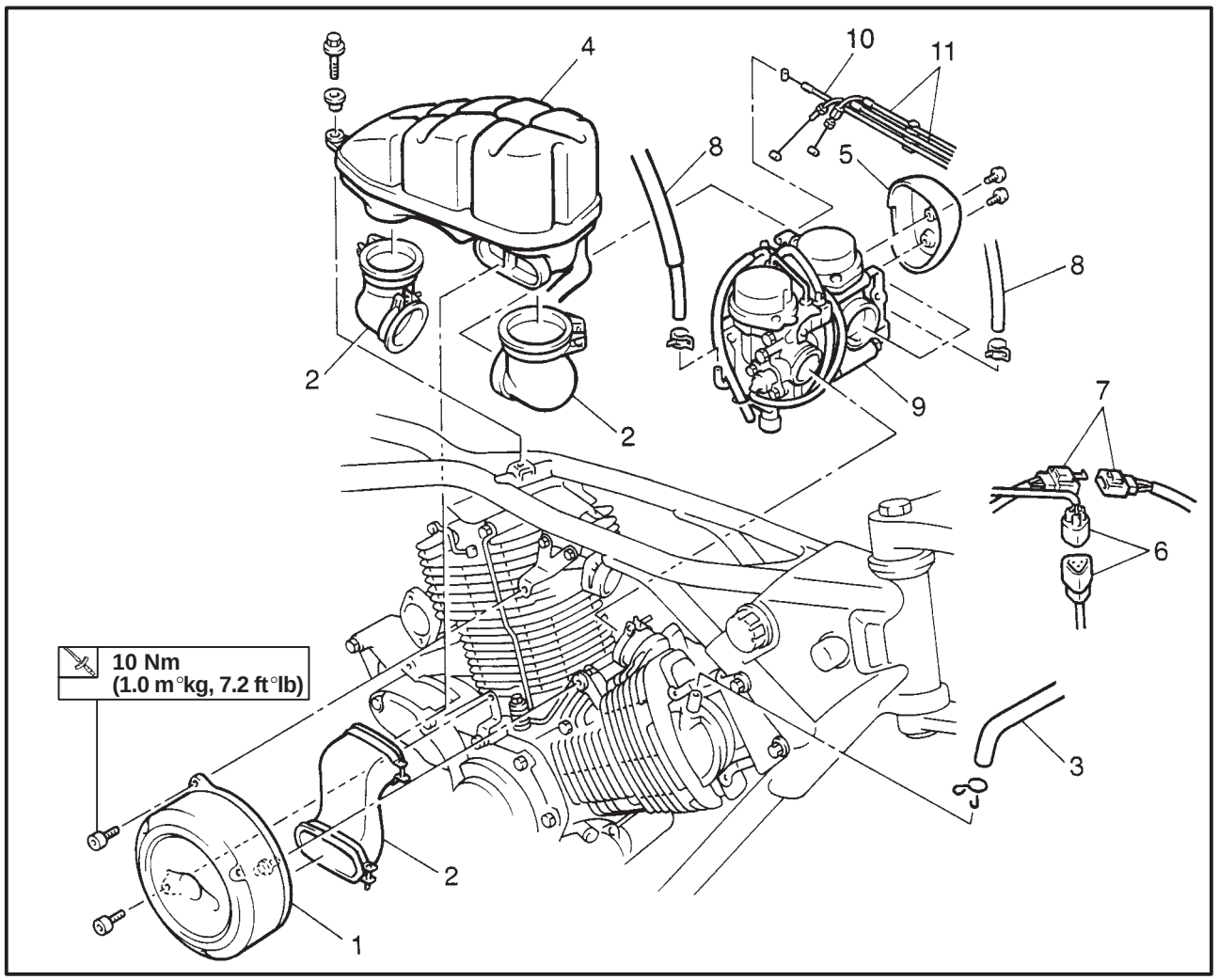

Order	Job name/Part name	Q'ty	Remarks
	Removing the carburetors Fuel tank		Remove the parts in the order listed. Refer to "FUEL TANK AND SEATS" in CHAPTER 3.
1	Air filter case assembly	1	
2	Air ducts	3	
3	Cylinder head breather hose	1	Disconnect
4	Air chamber	1	
5	Cover	1	
6	Throttle position sensor lead	1	Disconnect
7	Carburetor heater lead	1	Disconnect
8	Fuel hoses	2	Disconnect
9	Carburetor assembly	1	
10	Starter cable	1	**NOTE:**
11	Throttle cables	2	After removing the carburetor assembly, remove the starter cable and throttle cables.
			For installation, reverse the removal procedure.

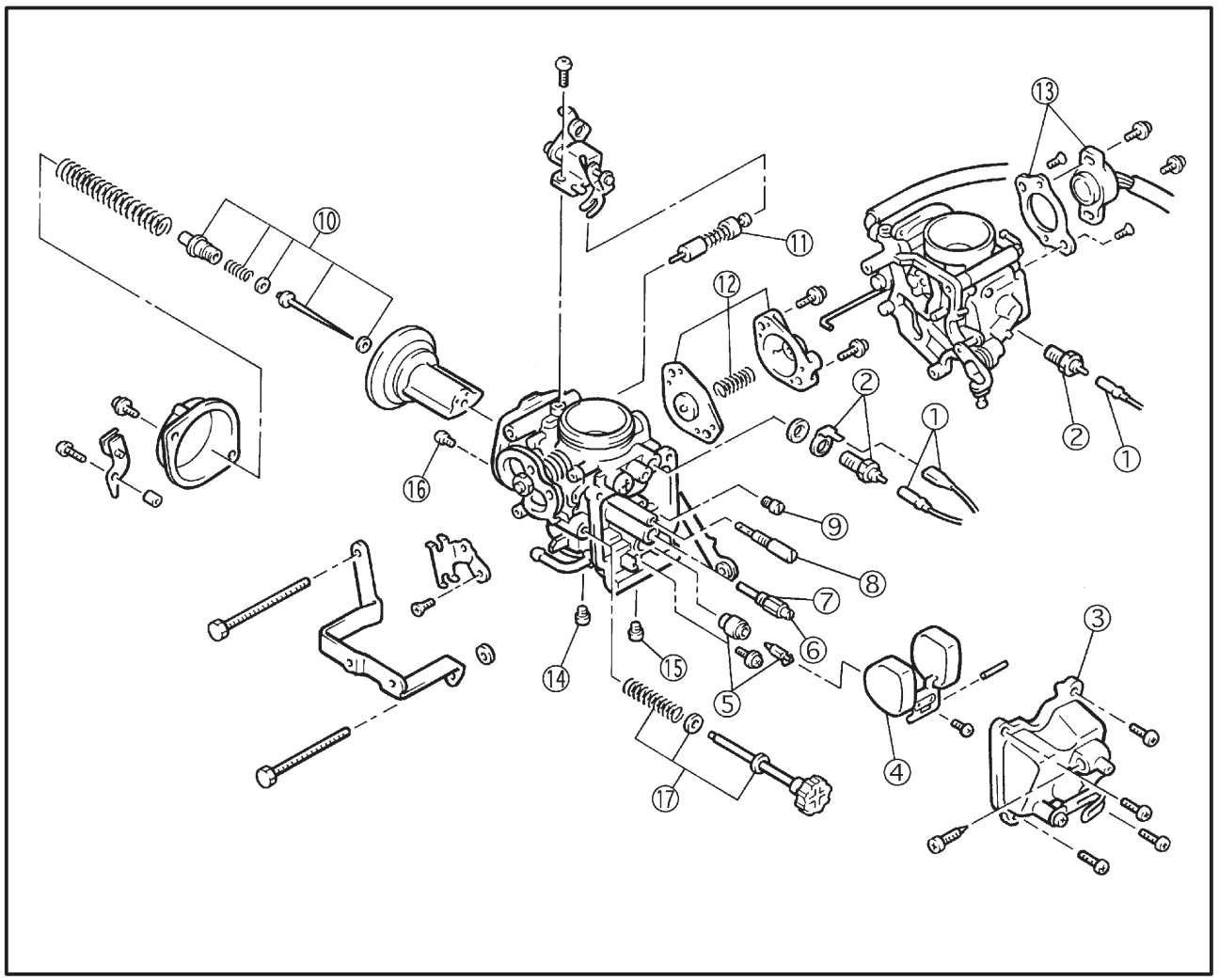

Order	Job name/Part name	Q'ty	Remarks
	Disassembling the carburetor.		Disassemble the parts in the order listed.
①	Carburetor heater leads	2	
②	Carburetor heaters	2	12V 30W
③	Float chamber/gasket	1	
④	Float	1	
⑤	Needle valve set	1	
⑥	Main jet	1	
⑦	Jet holder	1	
⑧	Pilot jet	1	Refer to "CARBURETOR ASSEMBLY".
⑨	Starter jet	1	
⑩	Jet needle set	1	
⑪	Starter plunger set	1	

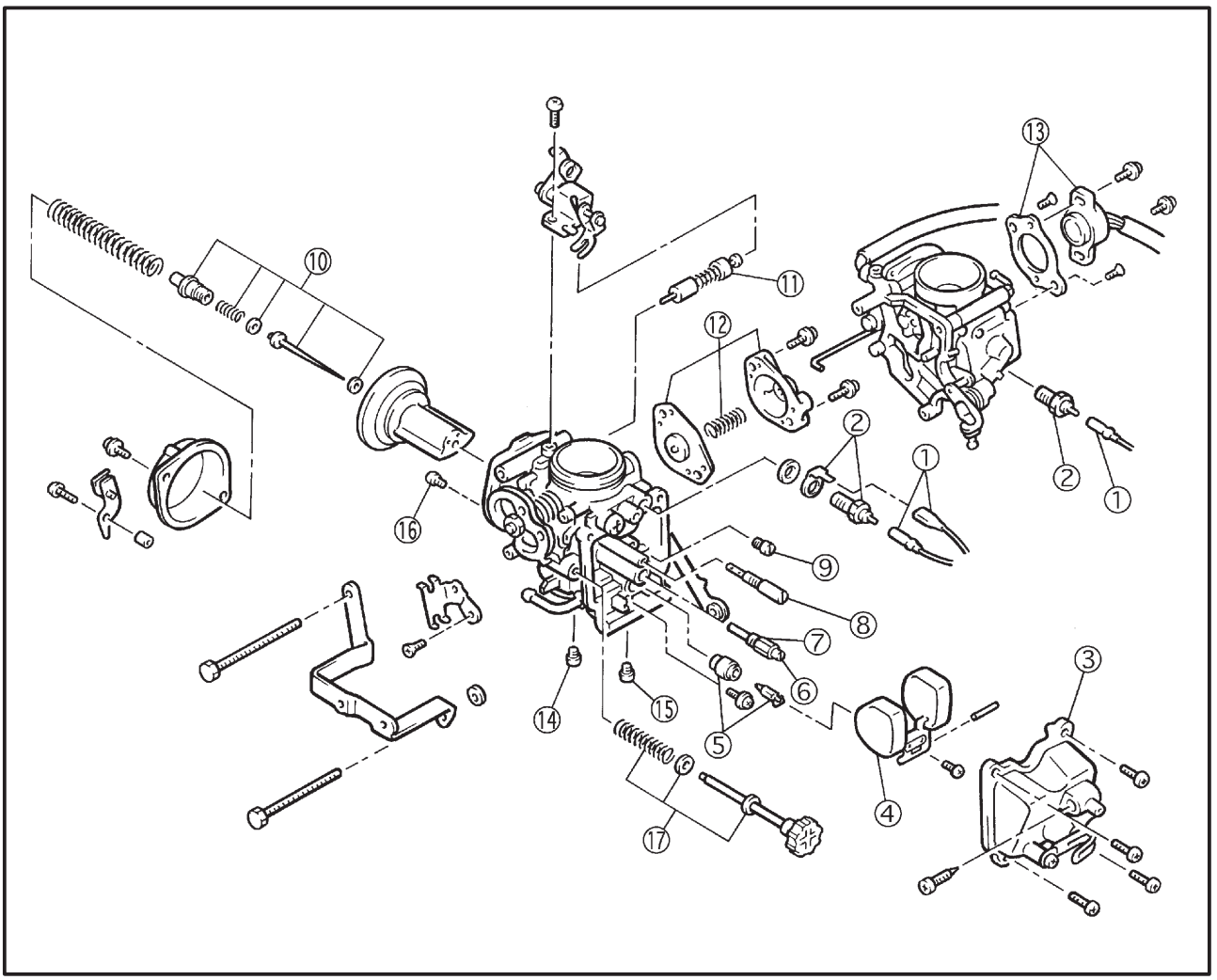

Order	Job name/Part name	Q'ty	Remarks
⑫	Diaphragm set	1	Refer to "ASSEMBLING THE CARBURE TORS".
⑬	Throttle position sensor	1	Refer to "CHECKING AND ADJUSTING THE THROTTLE POSITION SENSOR (TPS)".
⑭	Main air jet	1	
⑮	Pilot air jet 1	1	
⑯	Pilot air jet 2	1	
⑰	Throttle stop screw set	1	
			For assembly, reverse the disassembly procedure.

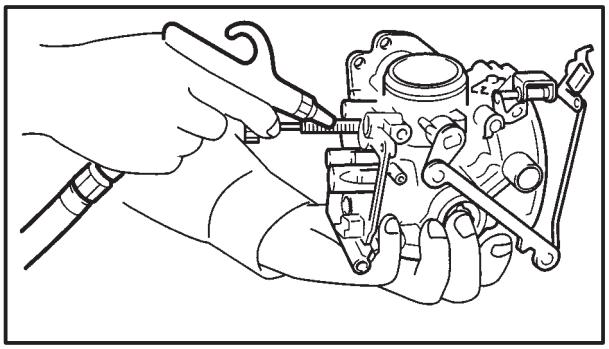

EB600031

CHECKING THE CARBURETORS

The following procedure applies to all of the carburetors.

1. Check:
   - carburetor body
   - float chamber
   - jet housing

   Cracks/damage → Replace.
2. Check:
   - fuel passages

   Obstruction → Clean.

▼▼▼▼▼▼▼▼▼▼▼▼▼▼▼▼▼▼▼▼▼▼▼▼▼▼▼▼▼▼▼▼▼▼

a. Wash the carburetor in a petroleumbased solvent. Do not use any caustic-carburetor-cleaning solution.
b. Blow out all of the passages and jets with compressed air.

▲▲▲▲▲▲▲▲▲▲▲▲▲▲▲▲▲▲▲▲▲▲▲▲▲▲▲▲▲▲▲▲▲▲

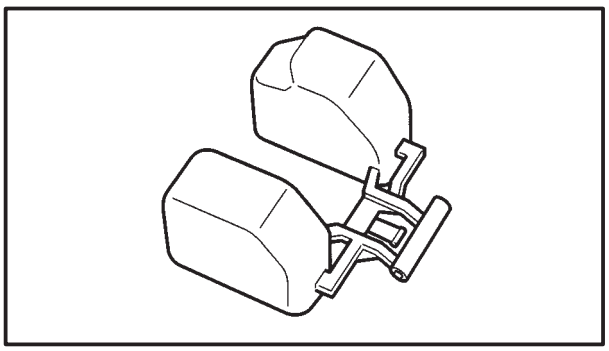

3. Check:
   - float chamber body

   Dirt → Clean.
4. Check:
   - float chamber rubber gasket

   Cracks/damage/wear → Replace.
5. Check:
   - float

   Damage → Replace.

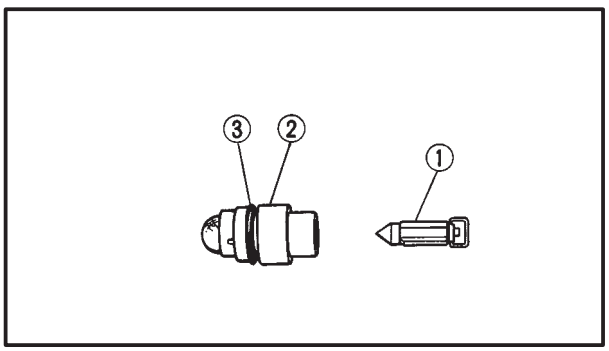

6. Check:
   - needle valve ①
   - needle valve seat ②
   - O-ring ③

   Damage/obstruction/wear → Replace the needle valve, needle valve seat and O-ring as a set.

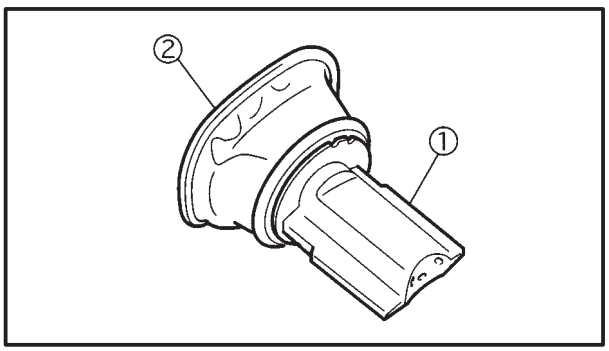

7. Check:
   - piston valve ①

   Damage/scratches/wear → Replace.
   - rubber diaphragm ②

   Cracks/tears → Replace.

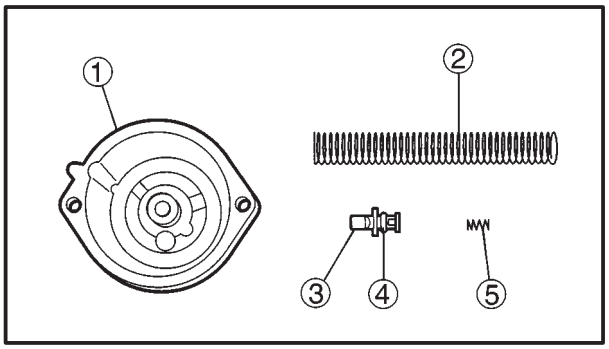

8. Check:
   - vacuum chamber cover ①
   - piston valve spring ②
   - plastic cap ③
   - O-ring ④
   - spring ⑤

   Cracks/damage → Replace.

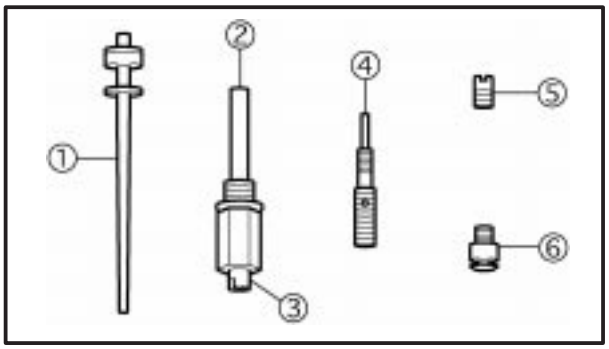

9. Check:
   - jet needle ①
   - needle jet ②
   - main jet ③
   - pilot jet ④
   - main air jet ⑤
   - starter jet ⑥

   Bends/damage/wear → Replace.
   Obstruction → Clean.
   Blow out the jets with compressed air.

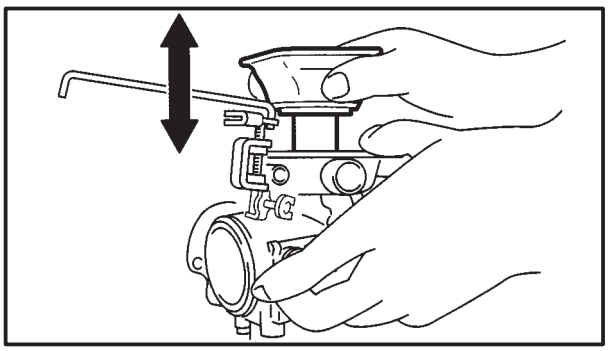

10. Check:
    - piston valve movement

    Insert the piston valve into the carburetor body and move it up and down.
    Tightness → Replace the piston valve.

11. Check.
    - fuel feed pipes
    - hose joint

    Cracks/damage → Replace.
    Obstruction → Clean.
    Blow out the pipes with compressed air.

12. Check:
    - fuel feed hoses
    - fuel hoses

    Cracks/damage/wear → Replace.
    Obstruction → Clean.
    Blow out the hoses with compressed air.

EB600042

ASSEMBLING THE CARBURETORS

The following procedure applies to both of the carburetors.

CAUTION:

- **Before assembling the carburetors, wash all of the parts in a petroleum-based solvent.**
- **Always use a new gasket.**

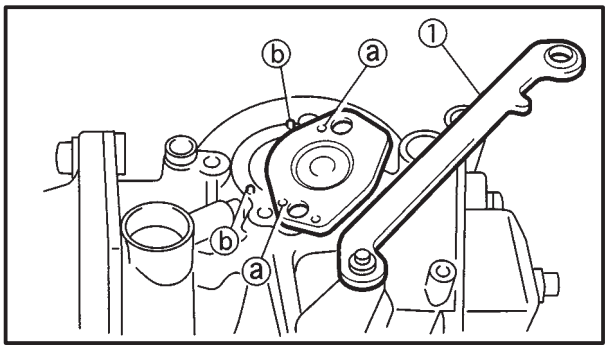

1. Install:
   - coasting enricher diaphragm
   - coasting enricher spring
   - coasting enricher cover

NOTE:

- Align the holes ⓐ on the coasting enricher diaphragm with the projections ⓑ in the carburetor body.
- When installing the coasting enricher, position the throttle connecting arm ① as shown.

2. Install:
   - connecting bolts

NOTE:

After installing the connecting bolts, check that the throttle cable lever and starter plunger link operate smoothly.

EB600051

INSTALLING THE CARBURETORS

1. Adjust:
   - carburetor synchronization
     Refer to “SYNCHRONIZING THE CARBURETORS” in chapter 3.
2. Adjust:
   - engine idling speed

	Engine idling speed **950 √ 1,050 r/min**

Refer to “ADJUSTING THE ENGINE IDLING SPEED” in chapter 3.

3. Adjust:
   - throttle cable free play

	Throttle cable free play **(at the flange of the throttle grip)** **4 √ 6 mm (0.16 √ 0.24 in)**

Refer to “ADJUSTING THE THROTTLE CABLE FREE PLAY” in chapter 3.

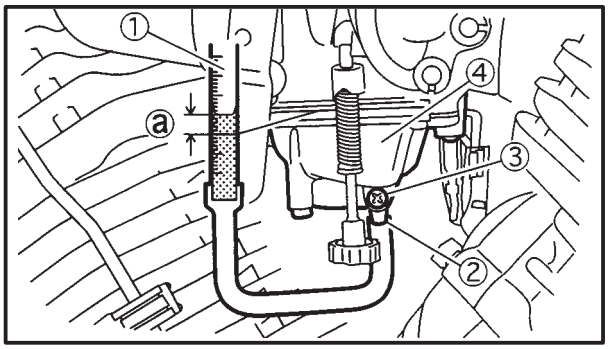

EB600063

MEASURING AND ADJUSTING THE FUEL LEVEL

1. Measure:
   - fuel level ⓐ
     Out of specification → Adjust.

	Fuel level (above the line on the float chamber) **4 √ 5 mm (0.16 √ 0.20 in)**

▼▼▼▼▼▼▼▼▼▼▼▼▼▼▼▼▼▼▼▼▼▼▼▼▼▼▼▼▼▼▼▼

a. Stand the motorcycle on a level surface.
b. Place the motorcycle on a suitable stand to ensure that the motorcycle is standing straight up.
c. Install the fuel level gauge ① to the fuel drain pipe ②.

	Fuel level gauge **YM-01312-A, 90890-01312**

d. Loosen the fuel drain screw ③.
e. Hold the fuel level gauge vertically next to the upper face of the float chamber ④.
f. Measure the fuel level ⓐ.

NOTE:

Fuel level readings should be equal on both sides of the carburetor assembly.

▲▲▲▲▲▲▲▲▲▲▲▲▲▲▲▲▲▲▲▲▲▲▲▲▲▲▲▲▲▲▲▲

2. Adjust:
   - fuel level

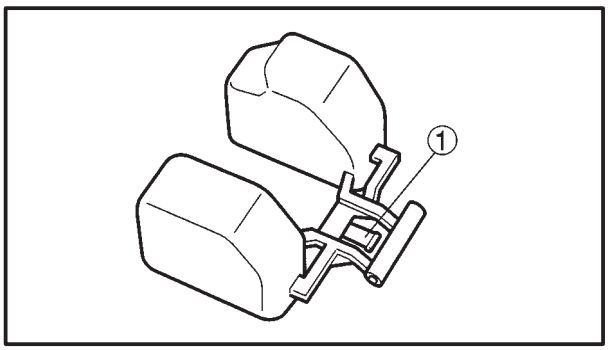

▼▼▼▼▼▼▼▼▼▼▼▼▼▼▼▼▼▼▼▼▼▼▼▼▼▼▼▼▼▼▼▼

a. Remove the carburetor assembly.
b. Check the needle valve seat and needle valve.
c. If either is worn, replace them as a set.
d. If both are fine, adjust the float level by slightly bending the float tang ①.
e. Install the carburetor assembly.
f. Measure the fuel level again.
g. Repeat steps (a) to (f) until the fuel level is within specification.

▲▲▲▲▲▲▲▲▲▲▲▲▲▲▲▲▲▲▲▲▲▲▲▲▲▲▲▲▲▲▲▲

EB600071

CHECKING AND ADJUSTING THE THROTTLE POSITION SENSOR

NOTE:

°Before adjusting the throttle position sensor, the engine idling speed should be properly adjusted.

1. Inspect:
   °throttle position sensor

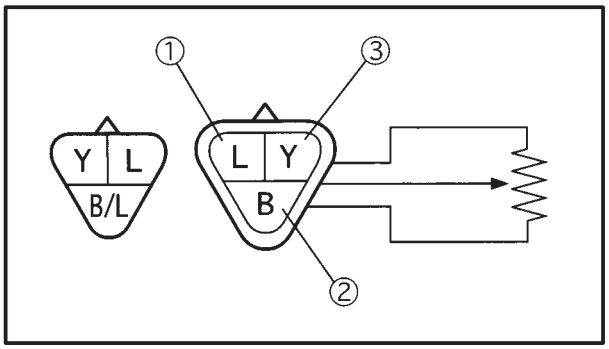

a. Disconnect the throttle position sensor coupler.
b. Connect the pocket tester (Ω × 1k) to the throttle position sensor.

Tester positive lead → blue ①
Tester negative lead → black ②

c. Check the throttle position sensor resistance "R1".
   Out of specification → Replace the throttle position sensor.

Throttle position sensor resistance "R1"
4 ~ 6 kΩ at 20°C (68°F)
(blue – black)

d. Connect the pocket tester (Ω × 1k) to the throttle position sensor.

Tester positive lead → yellow ③
Tester negative lead → black ②

e. While slowly opening the throttle, check that the throttle position sensor resistance "R2" is within the specified range.
   Out of specification → Replace the throttle position sensor.

Throttle position sensor resistance "R2"
0.56 ~ 0.84 kΩ to 3.01 ~ 4.51 kΩ at 20°C (68°F)
(yellow – black)

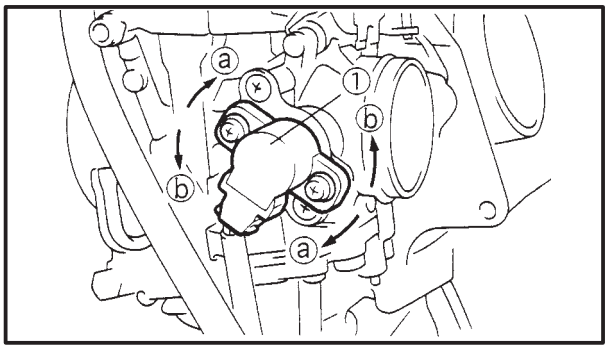

2. Adjust:
   °throttle position sensor angle

a. Loosen the throttle position sensor screws ①.
b. Turn the throttle position sensor in direction ⓐ or ⓑ until the specified closed-throttle resistance is indicated on the pocket tester.

Closed-throttle resistance
0.56 √ 0.84 kΩ at 20°C (68°F)
(yellow – black)

c. Tighten the throttle position sensor screws.

NOTE:

Remove the pocket tester leads and connect the throttle position sensor coupler.

EB601000

AIR INDUCTION SYSTEM (AIS)

AIR INDUTION

This system burns the unburned exhaust gases by injecting fresh air (secondary air) at the exhaust port. This is to reduce the output of the hydrocarbons.

When there is negative pressure around the exhaust port, the reed valve opens and the secondary air flows into the exhaust port.

The required temperature for burning the unburned exhaust gases is approximately 600° (1112°F) to 700°C (1292°F).

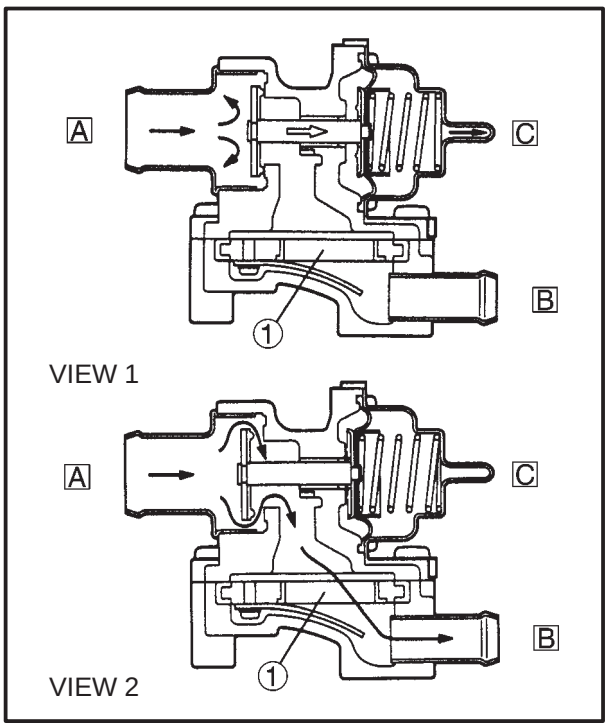

AIR CUT-OFF VALVE

The air cut-off valve is operated by intake gas pressure through the diaphragm. Normally, this valve is opened in order to allow fresh air to flow into the exhaust port.

When the throttle is rapidly closed, negative pressure is generated and the valve closes in order to prevent after-burning.

VIEW 1. (NO FLOW)
When decelerating (the throttle closes), the valve will close.

VIEW 2. (FLOW)
During normal operation the valve is open.

A From the air filter
B To the cylinder heads
C To the carburetor joint
1 Reed valve

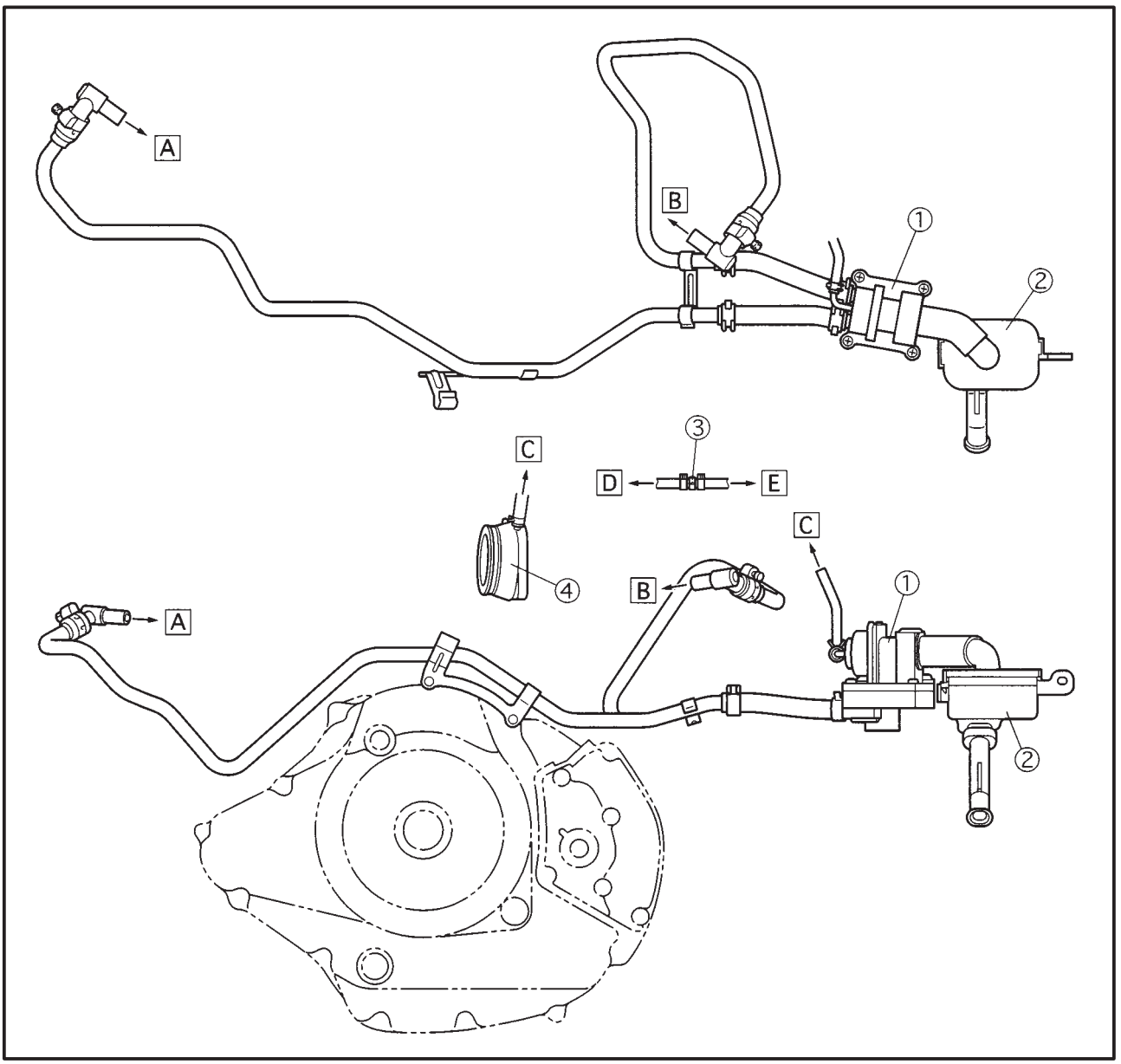

① Reed valve
② Air filter
③ Orifice
④ Carburetor joint (near cylinder)
A To the front cylinder head
B To the rear cylinder head
C To the orifice
D To the carburetor joint (rear cylinder)
E To the AIS valve

AIR INDUCTION SYSTEM INSPECTION

1. Inspect:
   - hose connections
     Poor connections → Properly connect.
   - hoses
   - reed valves
   - air cut-off valve
   - air filter
     Cracks/damage → Replace.
     Clogged → Clean.

NOTE:

The orifice ③ should be installed with the arrow mark facing the AIS valve side.

CHAPTER 6
CHASSIS

FRONT WHEEL AND BRAKE DISCS 6-1
REMOVING THE FRONT WHEEL 6-3
CHECKING THE FRONT WHEEL 6-3
CHECKING THE BRAKE DISCS 6-5
INSTALLING THE FRONT WHEEL 6-7
ADJUSTING THE FRONT WHEEL STATIC BALANCE 6-8

REAR WHEEL AND BRAKE DISC 6-10
MUFFLER AND BRAKE CALIPER 6-10
REAR WHEEL 6-11
REMOVING THE REAR WHEEL 6-13
CHECKING THE REAR WHEEL 6-13
CHECKING THE REAR WHEEL DRIVE HUB 6-14
INSTALLING THE REAR WHEEL 6-14
ADJUSTING THE REAR WHEEL STATIC BALANCE 6-15

FRONT AND REAR BRAKES 6-16
FRONT BRAKE PADS 6-16
REAR BRAKE PADS 6-17
REPLACING THE FRONT BRAKE PADS 6-18
REPLACING THE REAR BRAKE PADS 6-20
FRONT BRAKE MASTER CYLINDER 6-22
REAR BRAKE MASTER CYLINDER 6-24
REMOVING THE FRONT BRAKE MASTER CYLINDER 6-26
REMOVING THE REAR BRAKE MASTER CYLINDER 6-26
CHECKING THE FRONT AND REAR BRAKE MASTER CYLINDER 6-27
INSTALLING THE FRONT BRAKE MASTER CYLINDER 6-28
INSTALLING THE REAR BRAKE MASTER CYLINDER 6-30
FRONT BRAKE CALIPERS 6-32
REAR BRAKE CALIPER 6-34
REMOVING THE FRONT BRAKE CALIPERS 6-36
REMOVING THE REAR BRAKE CALIPER 6-36
CHECKING THE FRONT AND REAR BRAKE CALIPERS 6-37
INSTALLING THE FRONT BRAKE CALIPERS 6-38
INSTALLING THE REAR BRAKE CALIPER 6-40

FRONT FORK 6-43
REMOVING THE FRONT FORK LEGS 6-46
DISASSEMBLING THE FRONT FORK LEGS 6-46
CHECKING THE FRONT FORK LEGS 6-47
ASSEMBLING THE FRONT FORK LEGS 6-48
INSTALLING THE FRONT FORK LEGS 6-51

HANDLEBAR 6-52
REMOVING THE HANDLEBAR 6-54
CHECKING THE HANDLEBAR 6-54
INSTALLING THE HANDLEBAR 6-55

STEERING HEAD 6-58
REMOVING THE LOWER BRACKET 6-60
CHECKING THE STEERING HEAD 6-60
INSTALLING THE STEERING HEAD 6-61

REAR SHOCK ABSORBER AND SWINGARM 6-63
RIGHT SIDE COVER AND BATTERY BOX 6-63
LEFT SIDE COVER AND TOOL BOX 6-64
REAR SHOCK ABSORBER AND SWINGARM 6-65
HANDLING THE REAR SHOCK ABSORBER AND GAS CYLINDER 6-66
DISPOSING OF A REAR SHOCK ABSORBER AND GAS CYLINDER 6-66
REMOVING THE REAR SHOCK ABSORBER 6-67
REMOVING THE SWINGARM 6-68
CHECKING THE REAR SHOCK ABSORBER AND GAS CYLINDER 6-69
CHECKING THE SWINGARM 6-69
INSTALLING THE REAR SHOCK ABSORBER 6-70
INSTALLING THE SWINGARM 6-70

SHAFT DRIVE 6-72
TROUBLESHOOTING 6-72
CHECKING THE FINAL DRIVE OIL FOR CONTAMINATION AND INSPECTING THE SHAFT DRIVE FOR LEAKS 6-75
MEASURING THE RING GEAR BACKLASH 6-76
ADJUSTING THE RING GEAR BACKLASH 6-77
FINAL DRIVE ASSEMBLY AND DRIVE SHAFT 6-79
FINAL GEAR 6-80
DISASSEMBLING THE FINAL DRIVE ASSEMBLY 6-81
REMOVING AND INSTALLING THE RING GEAR BEARINGS 6-82
ALIGNING THE FINAL DRIVE PINION GEAR AND RING GEAR . . 6-83
CHECKING THE DRIVE SHAFT 6-87
INSTALLING THE DRIVE SHAFT 6-87

CHASSIS

FRONT WHEEL AND BRAKE DISCS

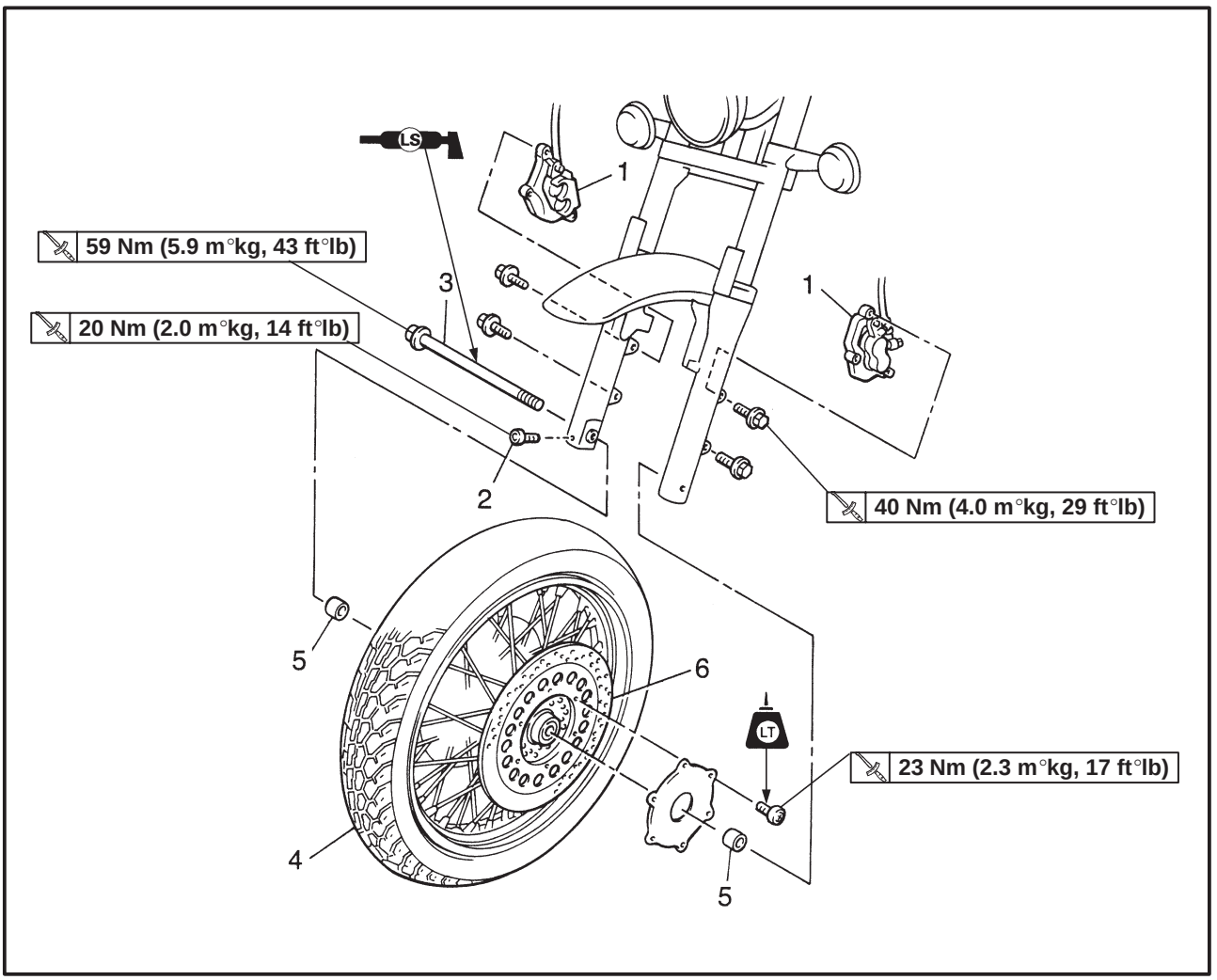

Order	Job name/Part name	Q'ty	Remarks
	Removing the front wheel and brake discs		Remove the parts in the order listed. Stand the motorcycle on a level surface. **WARNING** **Securely support the motorcycle so there is no danger of it falling over.**
1	Brake calipers	2	Refer to "REMOVING/INSTALLING THE FRONT WHEEL".
2	Front wheel axle pinch bolt	1	
3	Front wheel axle	1	
4	Front wheel assembly	1	
5	Collars	2	Refer to "INSTALLING THE FRONT WHEEL".
6	Brake discs	2	
			For installation, reverse the removal procedure.

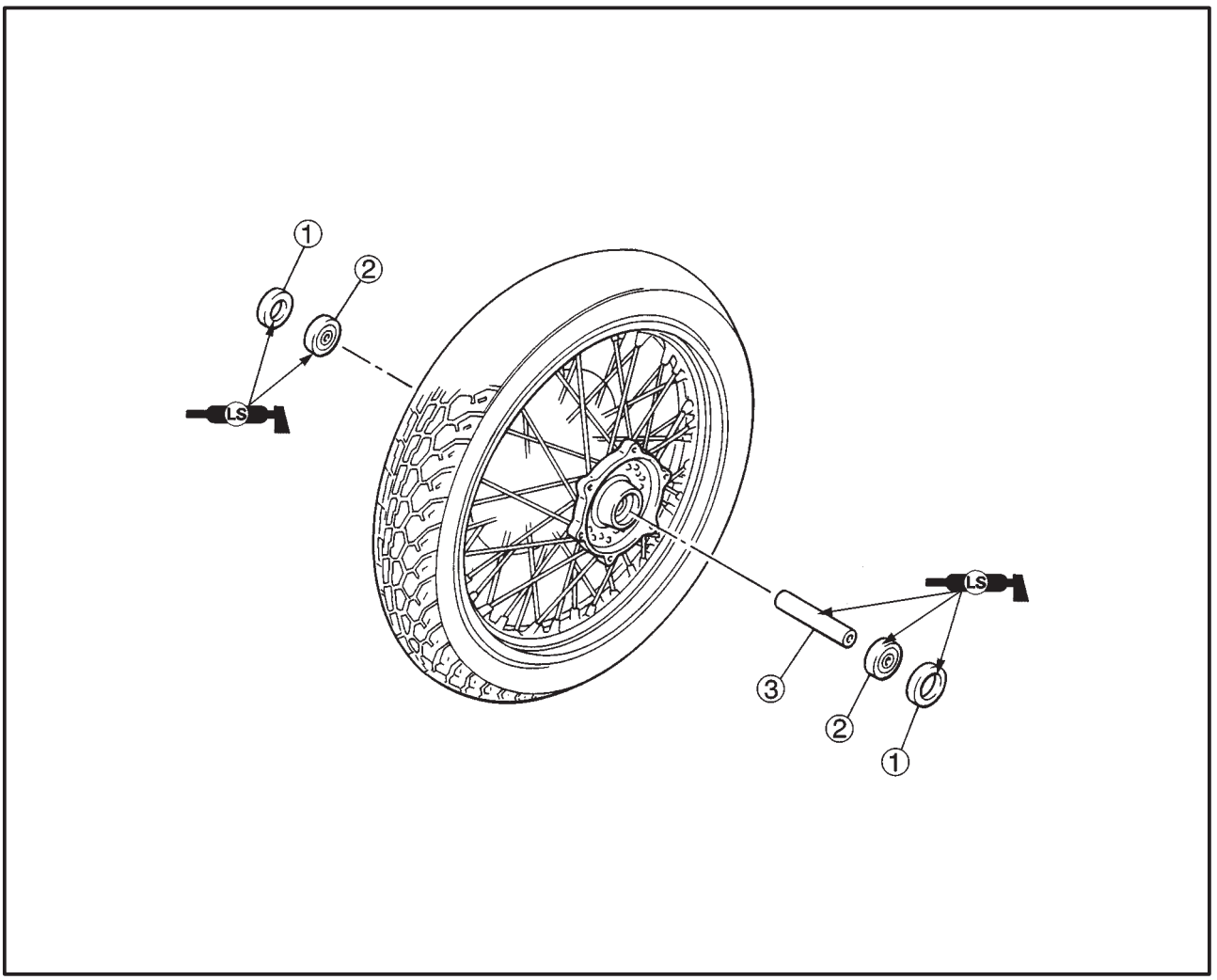

Order	Job name/Part name	Q'ty	Remarks
	Disassembling the front wheel		Disassemble the parts in the order listed.
①	Oil seals	2	
②	Bearings	2	
③	Collar	1	
			For assembly, reverse the disassembly procedure.

EAS00521

REMOVING THE FRONT WHEEL

1. Stand the motorcycle on a level surface.

WARNING

Securely support the motorcycle so that there is no danger of it falling over.

NOTE:

Place the motorcycle on a suitable stand so that the front wheel is elevated.

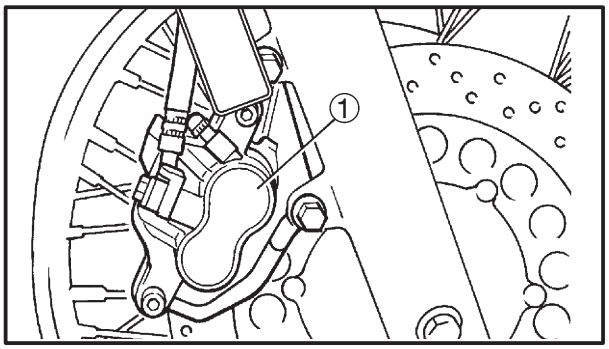

2. Remove:
   - brake calipers ① (left and right)

NOTE:

Do not squeeze the brake lever when removing the brake calipers.

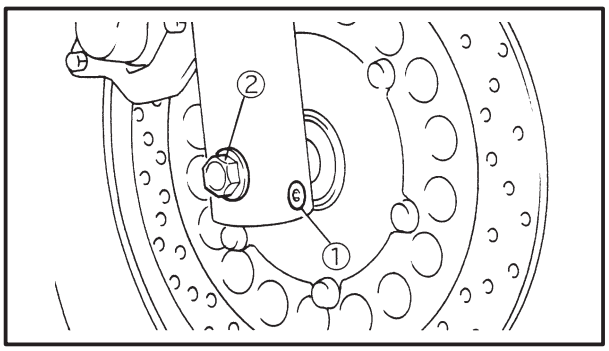

3. Loosen:
   - pinch bolt (front wheel axle) ①
   - front wheel axle ②
4. Elevate:
   - front wheel

NOTE:

Place the motorcycle on a suitable stand so that the front wheel is elevated.

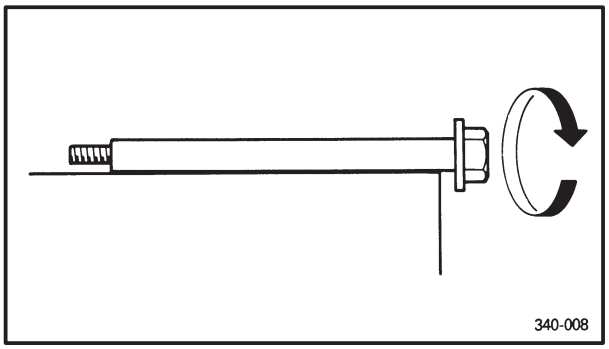

EAS00526

CHECKING THE FRONT WHEEL

1. Check:
   - wheel axle
     Roll the wheel axle on a flat surface.
     Bends → Replace.

WARNING

Do not attempt to straighten a bent wheel axle.

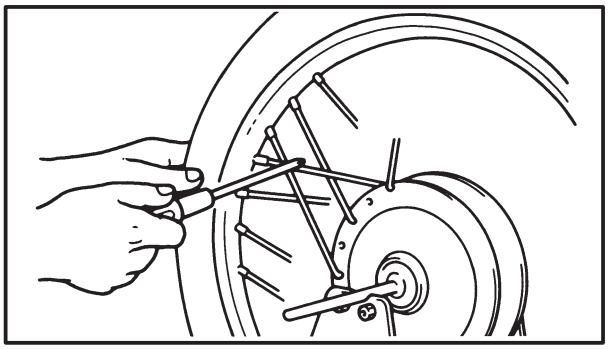

2. Check:
   - tire
   - front wheel
     Damage/wear → Replace.
     Refer to “CHECKING THE TIRES” and “CHECKING THE WHEELS” in chapter 3.
3. Check:
   - spokes
     Bends/damage → Replace.
     Loose → Tighten.
     Tap the spokes with a screwdriver.

NOTE:

A tight spoke will emit a clear, ringing tone, a loose spoke will sound flat.

4. Tighten:
   °spokes — **3 Nm (0.3m°kg, 22 ft°lb)**

NOTE:

After tightening the spokes, measure the front wheel runout.

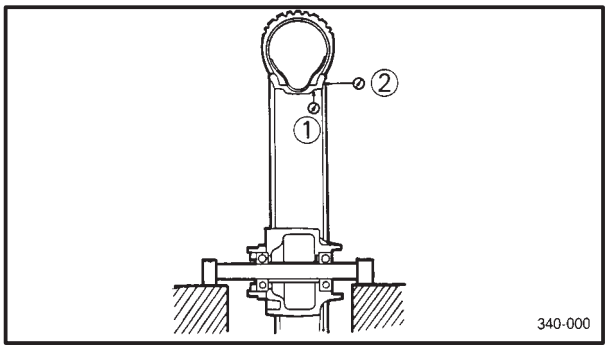

5. Measure:
   °front wheel radial runout ①
   °front wheel lateral runout ②
   Over the specified limits → Replace.

Front wheel radial runout limit
1.0 mm (0.04 in)
Front wheel lateral runout limit
0.5 mm (0.02 in)

6. Check:
   °collars
   Damage/wear → Replace.

⚠ WARNING

°**New tires have a relatively low grip on the road surface until they have been slightly worn.**
Therefore, approximately 100 km (62 mi) should be traveled at normal speed before any highspeed riding is done.

7. Check
   °wheel bearings
   Front wheel turns roughly or is loose → Replace the wheel bearings.
   °oil seals
   Damage/wear → Replace.
8. Replace:
   °wheel bearings (New)
   °oil seals (New)

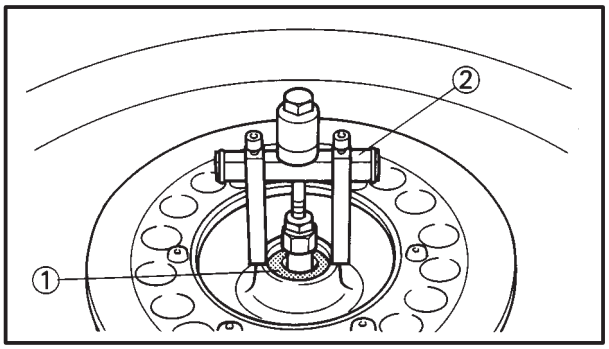

a. Clean the outside of the front wheel hub.
b. Remove the oil seals ① with a flat-head screwdriver.

NOTE:

To prevent damaging the wheel, place a rag between the screwdriver and the wheel surface.

c. Remove the wheel bearings with a general bearing puller ②.
d. Install the new wheel bearings and oil seals in the reverse order of disassembly.

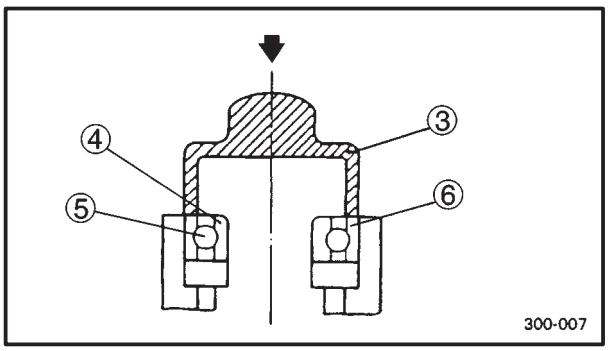

CAUTION:

Do not contact the wheel bearing center race ④ or balls ⑤. Contact should be made only with the outer race ⑥.

NOTE:

Use a socket ③ that matches the diameter of the wheel bearing outer race and oil seal.

EAS00531

CHECKING THE BRAKE DISCS

The following procedure applies to all of the brake discs.

1. Check:
   - brake disc
     Damage/galling → Replace.
2. Measure:
   - brake disc deflection ①
     Out of specification → Correct the brake disc deflection or replace the brake disc.

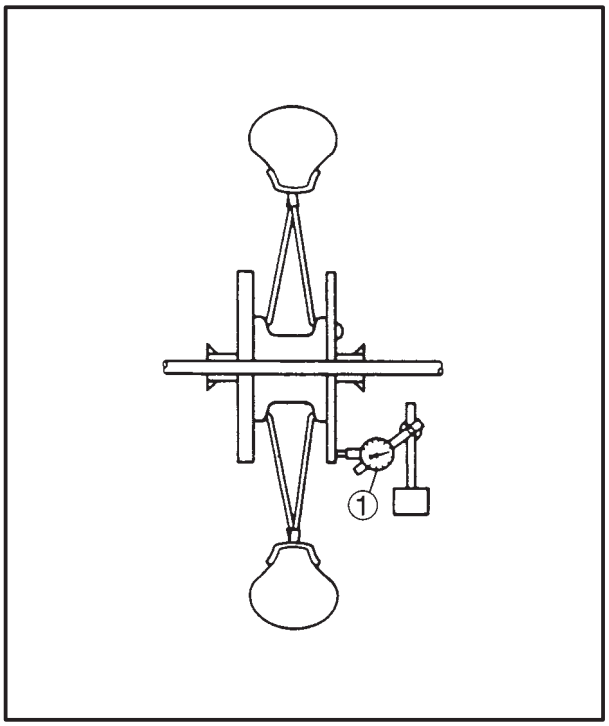

Brake disc deflection limit (maximum)
Front: 0.15 mm (0.006 in)
Rear: 0.15 mm (0.006 in)

a. Place the motorcycle on a suitable stand so that the wheel is elevated.
b. Before measuring the front brake disc deflection, turn the handlebar to the left or right to ensure that the front wheel is stationary.

c. Remove the brake caliper.
d. Hold the dial gauge at a right angle against the brake disc surface.
e. Measure the deflection 2 √ 3 mm (0.078 √ 0.12 in) below the edge of the brake disc.

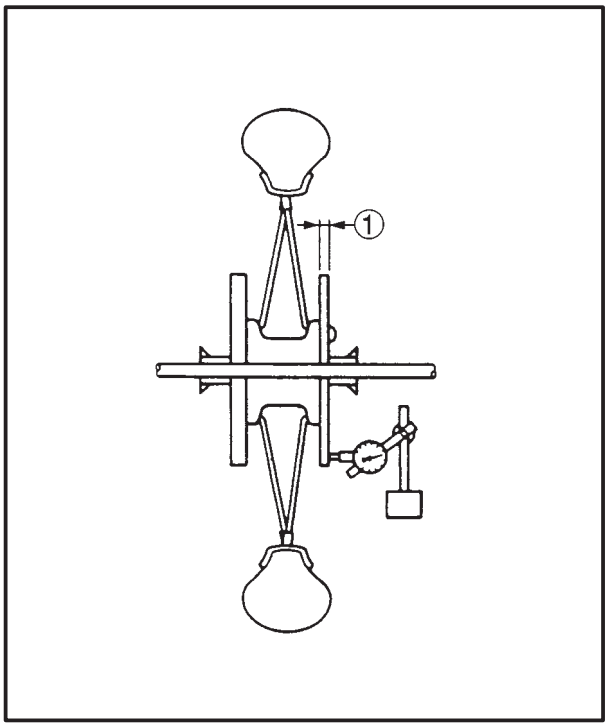

3. Measure:
   °brake disc thickness ①
   Measure the brake disc thickness at a few different locations.
   Out of specification → Replace.

Brake disc thickness limit (minimum)
Front: 4.5 mm (0.18 in)
Rear: 5.5 mm (0.22 in)

4. Adjust:
   °brake disc deflection

a. Remove the brake disc.
b. Rotate the brake disc by one bolt hole.
c. Install the brake disc.

NOTE:
Tighten the brake disc bolts in stages and in a crisscross pattern.

Brake disc bolt
23 Nm (2.3 m°kg, 17 ft°lb)
LOCTITE®

d. Measure the brake disc deflection.
e. If out of specification, repeat the adjustment steps until the brake disc deflection is within specification.
f. If the brake disc deflection cannot be brought within specification, replace the brake disc.

EAS00544

INSTALLING THE FRONT WHEEL

The following procedure applies to both brake discs.

1. Lubricate:
   - wheel axle
   - oil seallips

	Recommended lubricant **Lithium soap base grease**

2. Install:
   - front wheel assembly

NOTE:

The arrow mark ⓐ on the tire must point in the direction of the wheel.

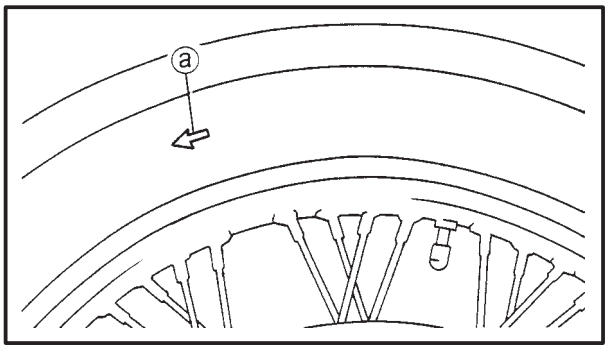

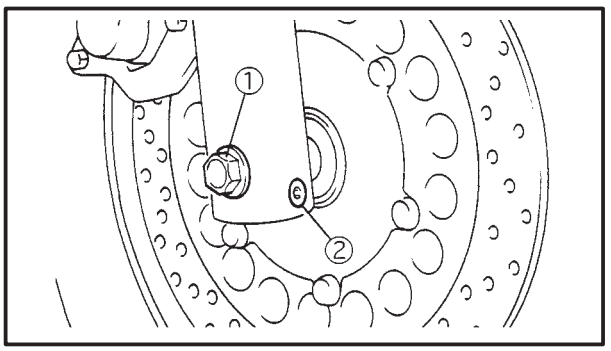

3. Tighten:
   - wheel axle ① **59 Nm (5.9 m·kg, 29 ft·lb)**
   - wheel axle pinch bolt ② **20 Nm (2.0 m·kg, 14 ft·lb)**

CAUTION:

Before tightening the wheel axle nut, push down hard on the handlebar several times and check if the front fork rebounds smoothly.

4. Install:
   - brake caliper **40 Nm (4.0 m·kg, 29 ft·lb)**

WARNING

Make sure that the brake hose is routed properly.

EAS00549

ADJUSTING THE FRONT WHEEL STATIC BALANCE

NOTE:

- After replacing the tire, wheel or both, the front wheel static balance shourd be adjusted.
- Adjust the front wheel static balance with the brake discs installed.

1. Remove:
   - balancing weight (-s)

NOTE:

Place the front wheel on a suitable balancing stand.

2. Find:
   - front wheel's heavy spot

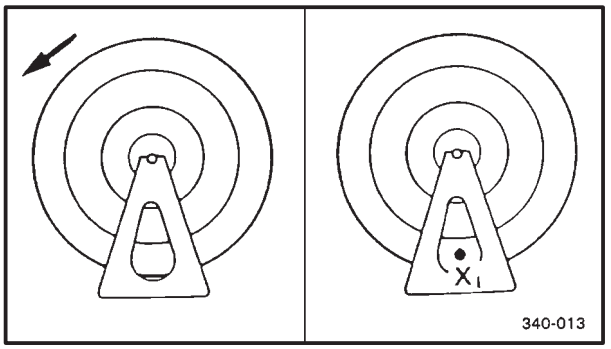

a. Spin the front wheel.
b. When the front wheel stops, put an "X_1" mark at the bottom of the wheel.
c. Turn the front wheel 90° so that the "X_1" mark is positioned as shown.
d. Release the front wheel.
e. When the wheel stops, put an "X_2" mark at the bottom of the wheel.
f. Repeat steps (b) through (d) several times until all the marks come to rest at the same spot.
g. The spot where all the marks come to rest is the front wheel's heavy spot "X".

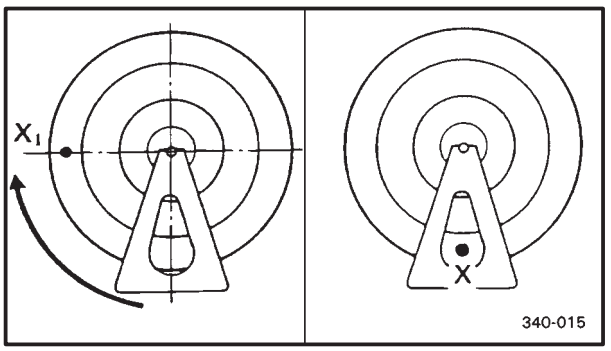

3. Adjust:
   - front wheel static balance

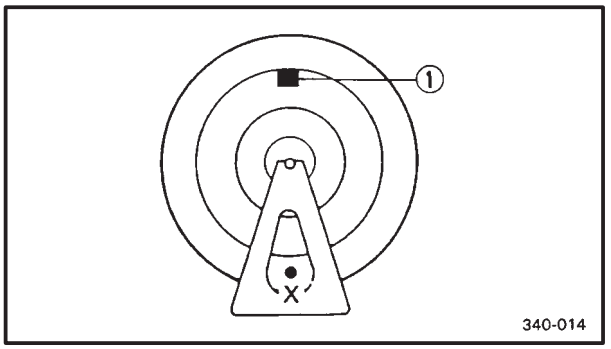

a. Install a balancing weight ① onto the rimexactly opposite the heavy spot "X".

NOTE:

Start with the lightest weight.

b. Turn the front wheel 90° so that the heavy spot is positioned as shown.
c. If the heavy spot does not stay in that position, install a heavier weight.
d. Repeat steps (b) and (c) until the front wheel is balanced.

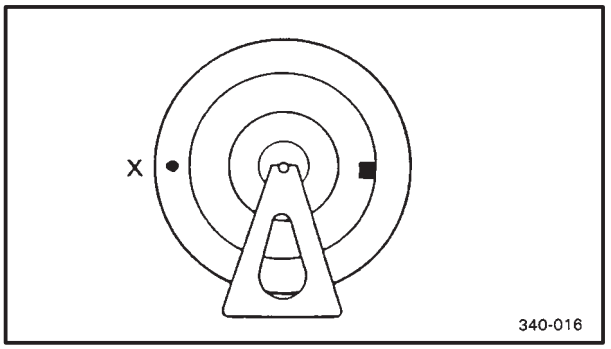

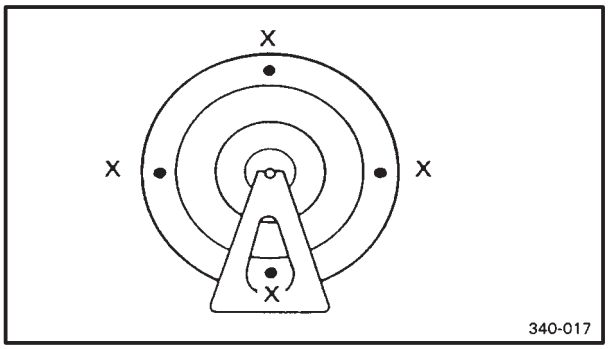

4. Check:
   - front wheel static balance

▼▼▼

REAR WHEEL AND BRAKE DISC
MUFFLER AND BRAKE CALIPER

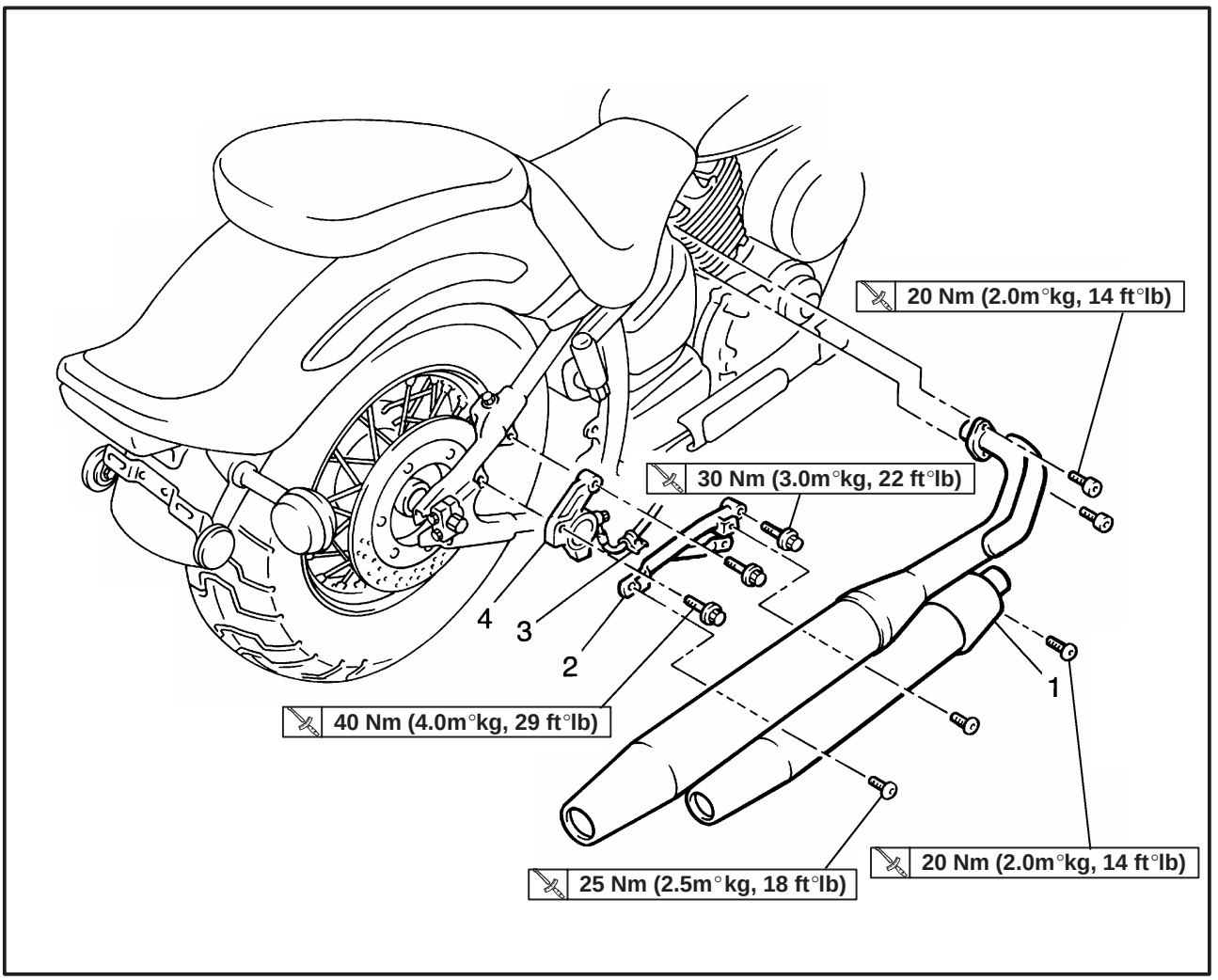

Order	Job name/Part name	Q'ty	Remarks
	Removing the muffler and brake caliper		Remove the parts in the order listed.
1	Muffler	1	
2	Muffler stay	1	
3	Brake hose holder	1	
4	Brake caliper	1	Refer to "REMOVING THE REAR WHEEL". For installation, reverse the removal procedure.

REAR WHEEL

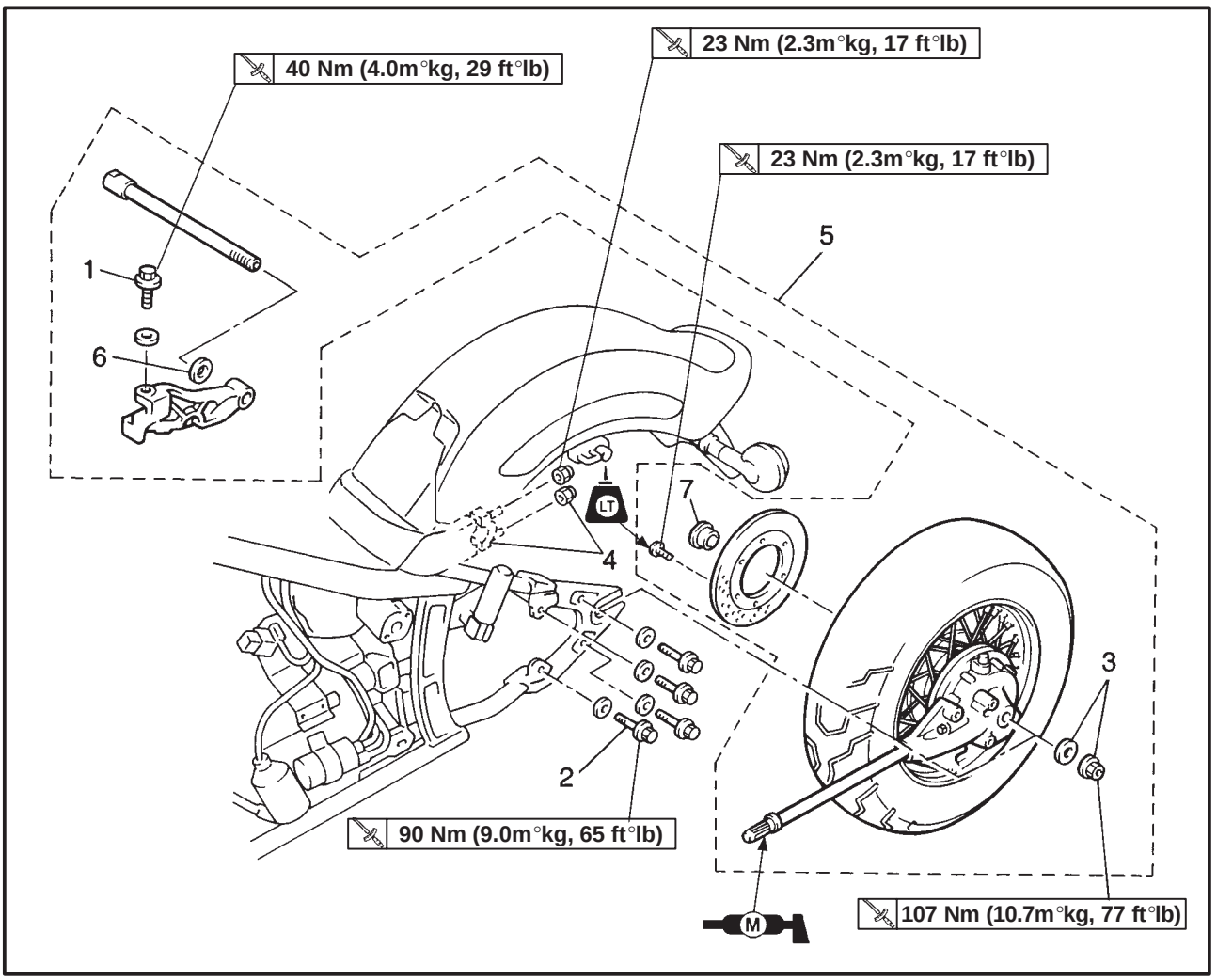

Order	Job name/Part name	Q'ty	Remarks
	Removing the rear wheel		Remove the parts in the order listed. **WARNING** **Securely support the motorcycle so there is no danger of it falling over.**
	Final gear oil		Drain Refer to "FINAL GEAR OIL REPLACEMENT" in CHAPTER 3.
	Fuel tank and seats		Refer to "FUEL TANK AND SEATS" in CHAPTER 3.
	Rear fender assembly		Loosen
1	Brake caliper bracket bolt	1	
2	Bolts	4	
3	Rear axle nut/washer	1/1	Refer to "REMOVING/INSTALLING THE REAR WHEEL".
4	Rear axle end nuts/axle holder	2/1	
5	Rear wheel assembly	1	
6	Washer	1	
7	Collar	1	
			For installation, reverse the removal procedure.

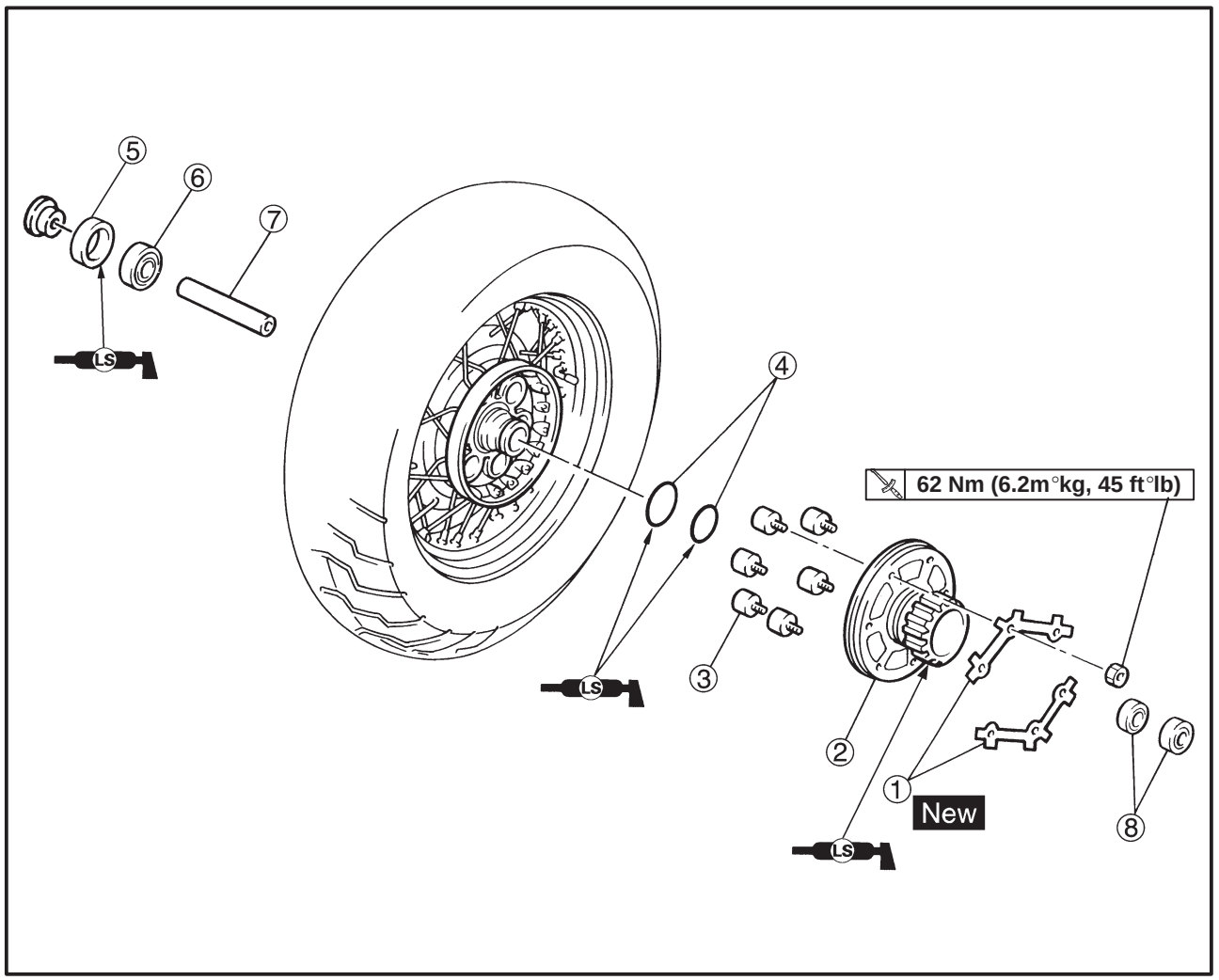

Order	Job name/Part name	Q'ty	Remarks
	Rear wheel disassembly		Remove the parts in the order listed.
	Disassembling the rear wheel		
①	Lock washers	2	
②	Clutch hub	1	
③	Dampers	6	
④	O-rings	2	
⑤	Oil seal	1	
⑥	Bearing	1	
⑦	Spacer	1	
⑧	Bearings	2	
			For assembly, reverse the disassembly procedure.

EAS00562

REMOVING THE REAR WHEEL

1. Stand the motorcycle on a level surface.

WARNING

Securely support the motorcycle so that there is no danger of it falling over.

NOTE:

Place the motorcycle on a suitable stand so that the rear wheel is elevated.

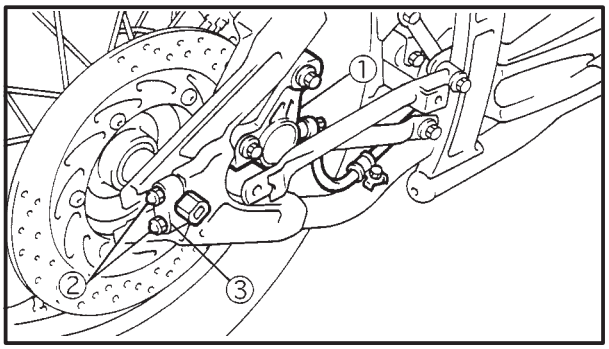

2. Remove:
   - rear gear case fitting bolts
3. Remove:
   - brake caliper ①
   - brake caliper bracket bolt

NOTE:

Do not depress the brake pedai when removing the brake caliper.

4. Remove:
   - wheel axle nut
   - washer
5. Remove:
   - rear axle end nut ②
6. Remove:
   - rear axle holder ③
7. Remove:
   - rear wheel

EAS00566

CHECKING THE REAR WHEEL

1. Check:
   - wheel axle
   - rear wheel
   - wheel bearings
   - oil seals

   Refer to “FRONT WHEEL AND BRAKE DISCS”.
2. Check:
   - tire

   Damage/wear → Replace.
   Refer to “CHECKING THE TIRES” in chapter 3.
3. Check:
   - spokes

   Refer to “FRONT WHEEL AND BRAKE DISCS”.
4. Measure:
   - rear wheel radial runout
   - rear wheel lateral runout

   Refer to “FRONT WHEEL AND BRAKE DISCS”.

EAS00567

CHECKING THE REAR WHEEL DRIVE HUB

1. Check:
   - rear wheel drive hub
     Cracks/damage → Replace.
   - rear wheel drive hub dampers
     Damage/wear → Replace.

EAS00572

INSTALLING THE REAR WHEEL

1. Lubricate:
   - drive shaft splines

	Recommended lubricant **Molydenum disulfide grease**

2. Lubricate:
   - wheel axle
   - wheel bearings
   - oil seal lips

	Recommended lubricant **Lithium soap base grease**

3. Install:
   - rear wheel assembly

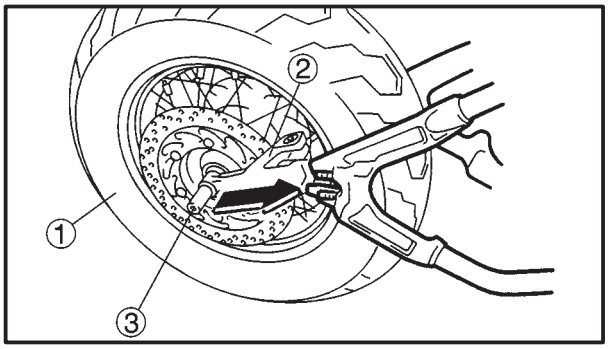

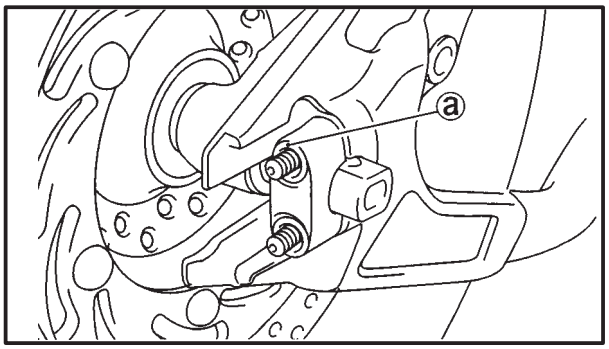

a. Install the rear wheel assembly ① with the rear brake caliper bracket ② and hold the bracket to keep the specified position.
b. After installation of the rear axle shaft ③, slide the wheel assembly to forward direction.
c. To make sure the caliper bracket mounts on the swingarm and then, fix the holder of swingarm temporally.

NOTE:

The holder should installed with the punch mark ⓐ facing upper.

d. Tighten the rear gear housing bolts, with specified tightening torque.

	Rear gear housing bolt **90 Nm (9.0 m°kg, 65 ft°lb)**

e. Tighten the nut of rear axle shaft with specified torque.

	Wheel axle nut **107 Nm (10.7 m°kg, 77 ft°lb)**

f. Tighten the rear axle holder with specified torque.

	Rear axle end nut **23 Nm (2.3 m°kg, 17 ft°lb)**

g. Tighten the rear brake caliper bracket bolt with specified tightening torque.

	Brake caliper bracket bolt **40 Nm (4.0 m°kg, 29 ft°lb)**

h. Install the rear brake caliper on the bracket and tighten the bolts with specified tightening torque.

	Brake caliper bolt **40 Nm (4.0 m°kg, 29 ft°lb)**

▲▲▲▲▲▲▲▲▲▲▲▲▲▲▲▲▲▲▲▲▲▲▲▲▲▲▲▲▲▲▲▲

EAS00575

ADJUSTING THE REAR WHEEL STATIC BALANCE

NOTE:

- After replacing the tire, wheel or both, the rear wheel static balance should be adjusted.
- Adjust the rear wheel static balance with the brake disc and rear wheel drive hub installed.

1. Adjust:
   - rear wheel static balance
     Refer to “FRONT WHEEL AND BRAKE CISCS”.

FRONT AND REAR BRAKES
FRONT BRAKE PADS

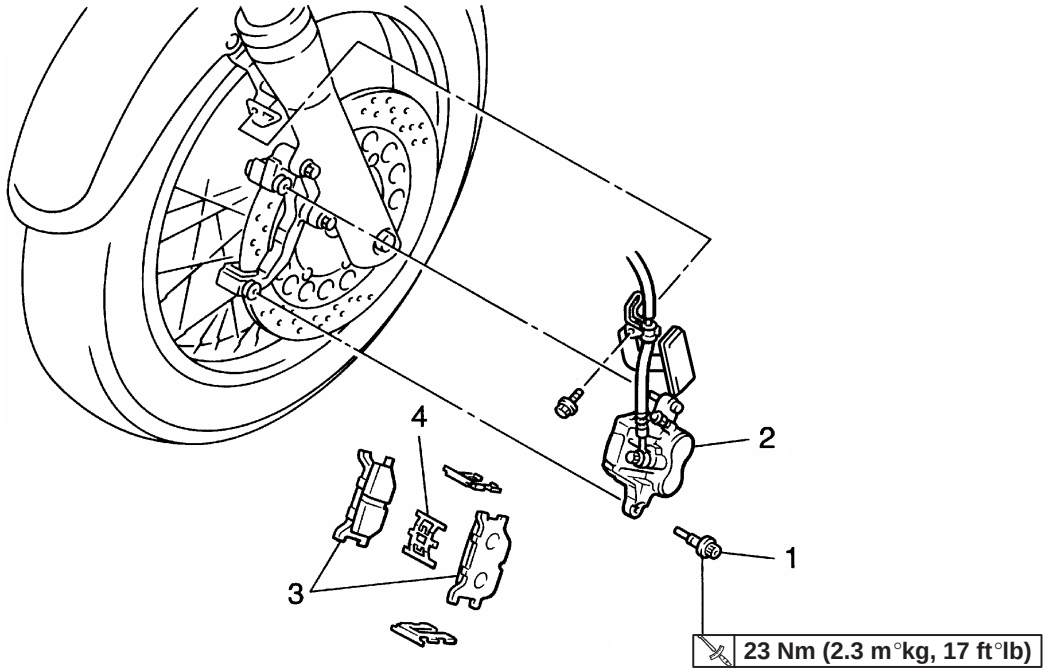

Order	Job name/Part name	Q'ty	Remarks
	Removing the front brake pads		Remove the parts in the order listed.
1	Retaining bolt	1	Refer to "REPLACING THE FRONT BRAKE PADS".
2	Brake caliper	1	
3	Brake pads	2	
4	Pad spring	1	
			For installation, reverse the removal procedure.

EAS00578

REAR BRAKE PADS

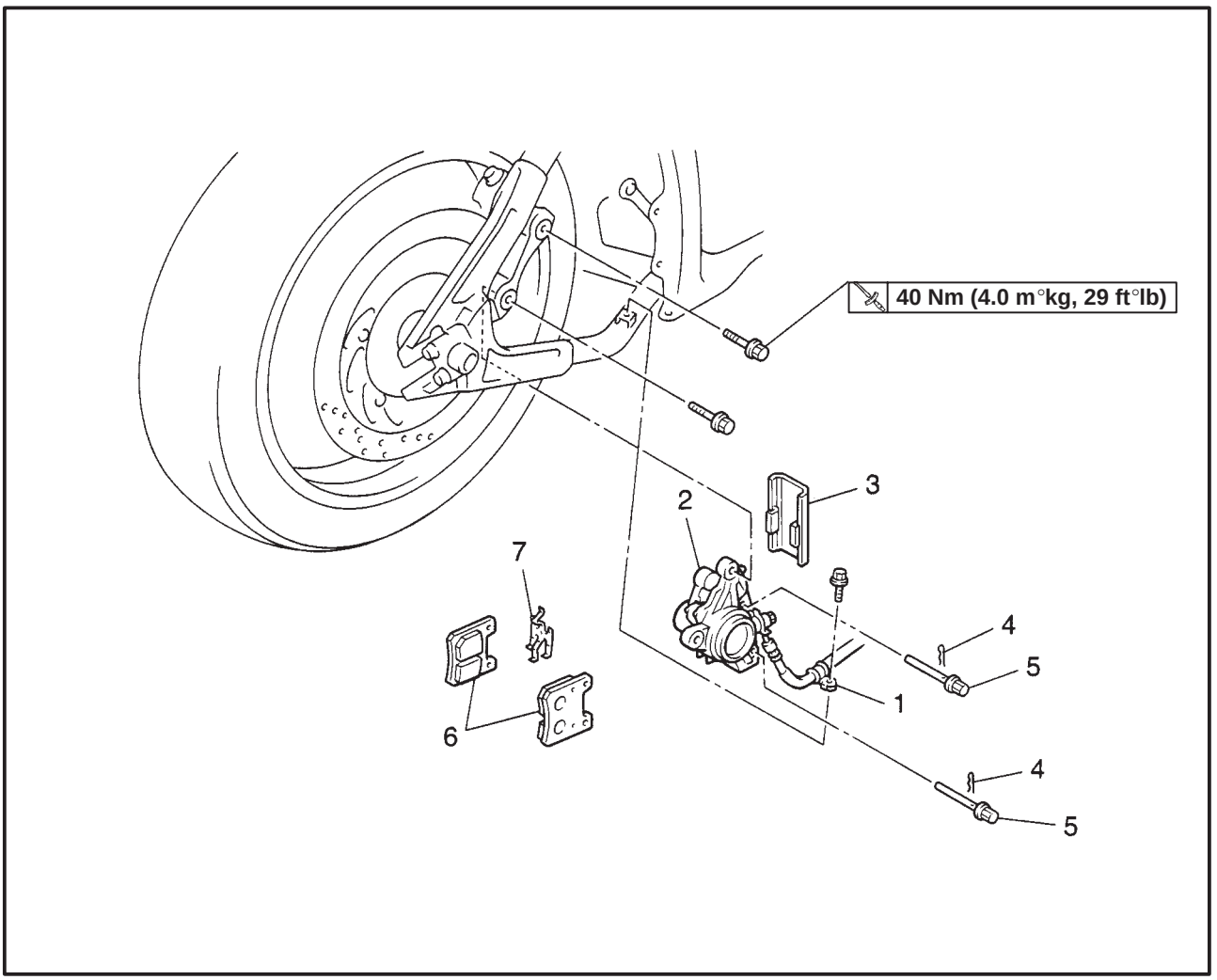

Order	Job name/Part name	Q'ty	Remarks
	Removing the rear brake pads		Remove the parts in the order listed.
	Muffler		Refer to "REAR WHEEL AND BRAKE DISC".
	Muffler stay		
1	Brake hose holder	1	Refer to "REPLACING THE REAR BRAKE PADS".
2	Caliper	1	
3	Cover	1	
4	Clips	2	
5	Pad pins	2	
7	Pad spring	1	
6	Brake pads	2	
			For installation, reverse the removal procedure.

EAS00579

CAUTION:

Disc brake components rarely require disassembly.
Therefore, always follow these preventive measures:
- **Never disassemble brake components unless absolutely necessary.**
- **If any connection on the hydraulic brake system is disconnected, the entire brake system must be disassembled, drained, cleaned, properly filled, and bled after reassembly.**
- **Never use solvents on internal brake components.**
- **Use only clean or new brake fluid for cleaning brake components.**
- **Brake fluid may damage painted surfaces and plastic parts. Therefore, always clean up any spilt fluid immediately.**
- **Avoid brake fluid coming into contact with the eyes as it can cause serious injury.**

First aid for brake fluid entering the eyes:
- **Flush with water for 15 minutes and get immediate medical attention.**

EAS00582

REPLACING THE FRONT BRAKE PADS

The following procedure applies to both brake calipers.

NOTE:

When replacing the brake pads, it is not necessary to disconnect the brake hose or disassemble the brake caliper.

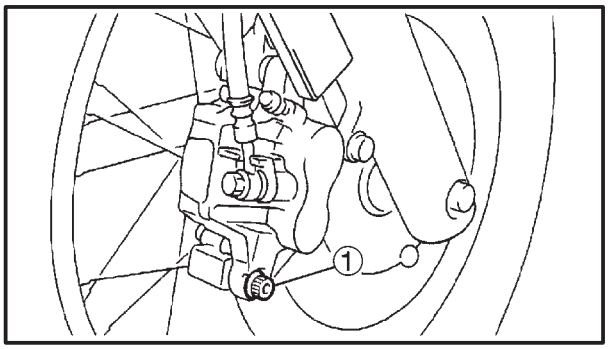

1. Remove:
   - brake hose holder
   - retaining bolt ①

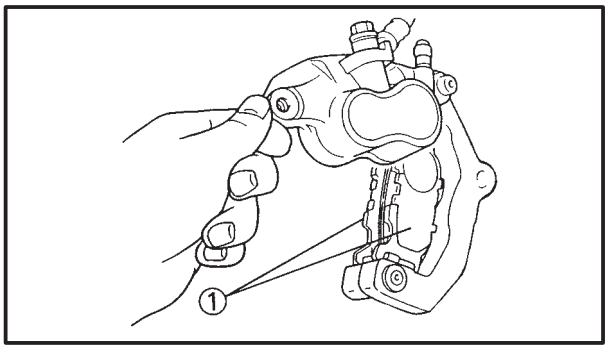

2. Remove:
   - brake pads ①
     (along with the brake pad shims)

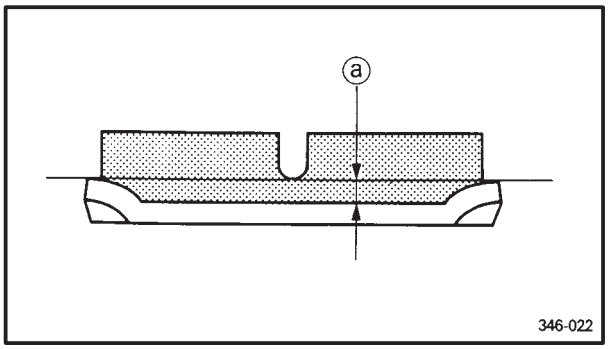

3. Measure:
   - brake pad wear limit ⓐ
     Out of specification → Replace the brake pads as a set.

	Brake pad wear limit **0.8 mm (0.031 in)**

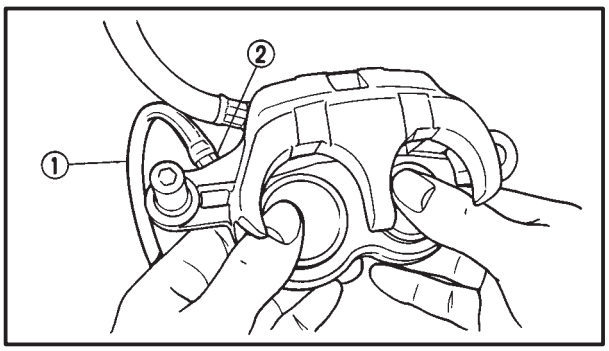

4. Install:
   - brake pad shims
     (onto the brake pads)
   - brake pads
   - brake pad spring

NOTE:

Always install new brake pads, brake pad shims, and a brake pad spring as a set.

▼▼▼▼▼▼▼▼▼▼▼▼▼▼▼▼▼▼▼▼▼▼▼▼▼▼▼▼▼▼▼▼

a. Connect a clear plastic hose ① tightly to the bleed screw ②. Put the other end of the hose into an open container.
b. Loosen the bleed screw and push the brake caliper pistons into the brake caliper with your finger.
c. Tighten the bleed screw.

	Bleed screw **6 Nm (0.6 m°kg, 4.3 ft°lb)**

d. Install new brake pad shims onto the new brake pads.
e. Install new brake pads and a new brake pad spring.

▲▲▲▲▲▲▲▲▲▲▲▲▲▲▲▲▲▲▲▲▲▲▲▲▲▲▲▲▲▲▲▲

5. Install:
   - brake caliper
   - retaining bolt **23 Nm (2.3 m°kg, 17 ft°lb)**

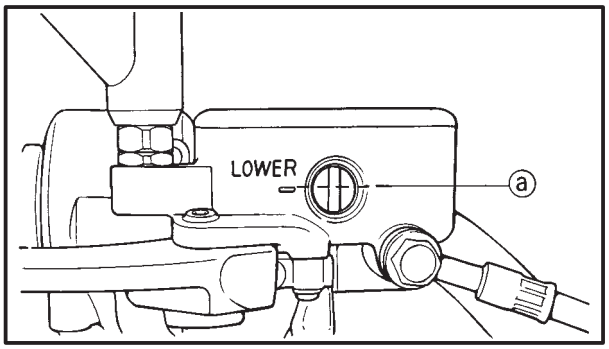

6. Check:
   - brake fluid level
     Below the minimum lever mark ⓐ → Add the recommended brake fluid to the proper level.
     Refer to “CHECKING THE BRAKE FLUID LEVEL” in chapter 3.
7. Check:
   - brake lever operation
     Soft or spongy feeling → Bleed the brake system.
     Refer to “BLEEDING THE HYDRAULIC BRAKE SYSTEM” in chapter 3.

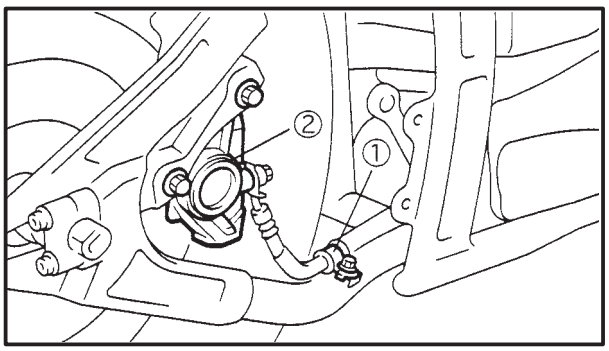

EAS00583

REPLACING THE REAR BRAKE PADS

NOTE:

When replacing the brake pads, it is not necessary to disconnect the brake hose or disassemble the brake caliper.

1. Remove:
   - brake hose holder ①
   - brake caliper ②
2. Remove:
   - brake pad cover
   - brake pad clips
   - brake pad pins
   - brake pad spring
3. Remove:
   - brake pads
     (along with the brake pad shims)

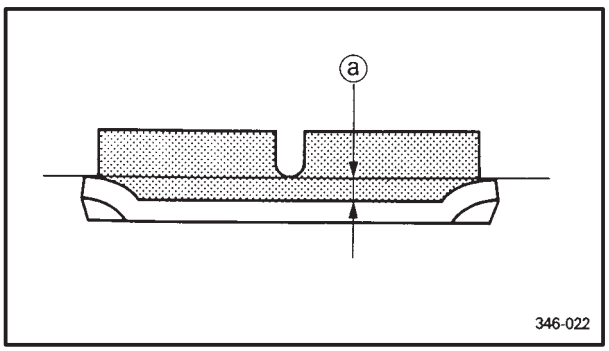

4. Measure:
   - brake pad wear limit ⓐ
     Out of specification → Replace the brake pads as a set.

	Brake pad wear limit **0.5 mm (0.02 in)**

5. Install:
   - brake pad shims (onto the brake pads)
   - brake pads
   - brake pad spring

NOTE:

Always install new brake pads, brake pad shims, and a brake pad spring as a set.

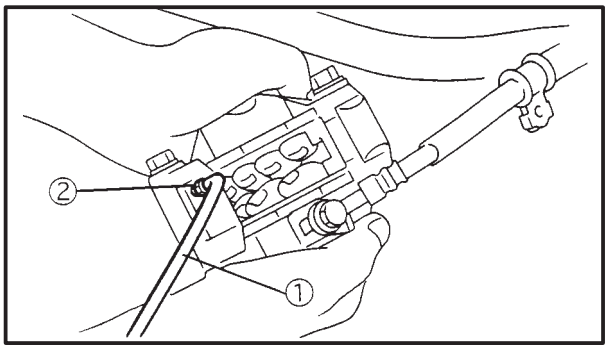

a. Connect a clear plastic hose ① tightly to the bleed screw ②. Put the other end of the hose into an open container.
b. Loosen the bleed screw and push the brake caliper pistons into the brake caliper with your finger.
c. Tighten the bleed screw.

	Bleed screw **6 Nm (0.6 m°kg, 4.3 ft°lb)**

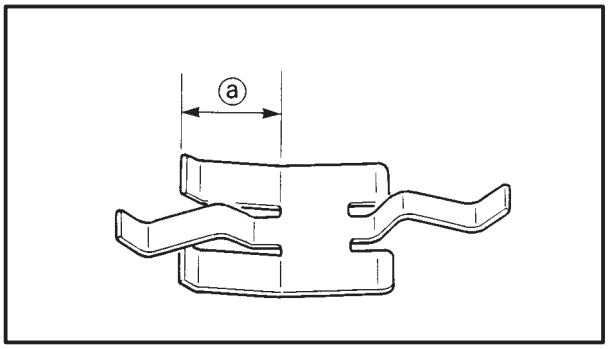

d. Install new brake pad shims onto the new brake pads.
e. Install new brake pads and a new brake pad spring.

NOTE:

The longer tangs ⓐ on the brake pad spring must point in the direction of disc rotation.

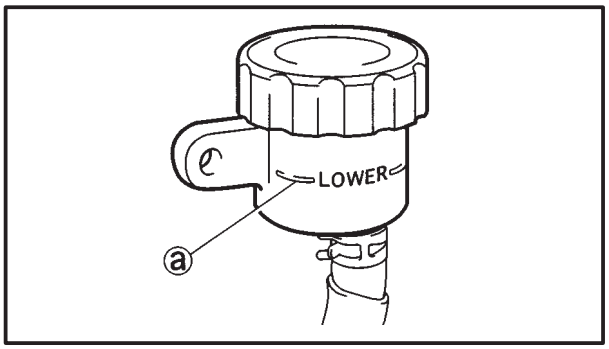

6. Install:
   - brake pad pins
   - brake pad clips
   - brake pad cover
   - brake caliper **40 Nm (4.0 m°kg, 29 ft°lb)**
7. Check:
   - brake fluid level
     Below the minimum level mark ⓐ → Add the recommended brake fluid to the proper level.
     Refer to “CHECKING THE BRAKE FLUID LEVEL” in chapter 3.
8. Check:
   - brake pedal operation
     Soft or spongy feeling → Bleed the brake system.
     Refer to “BLEEDING THE HYDRAULIC BRAKE SYSTEM” in chapter 3.

FRONT BRAKE MASTER CYLINDER

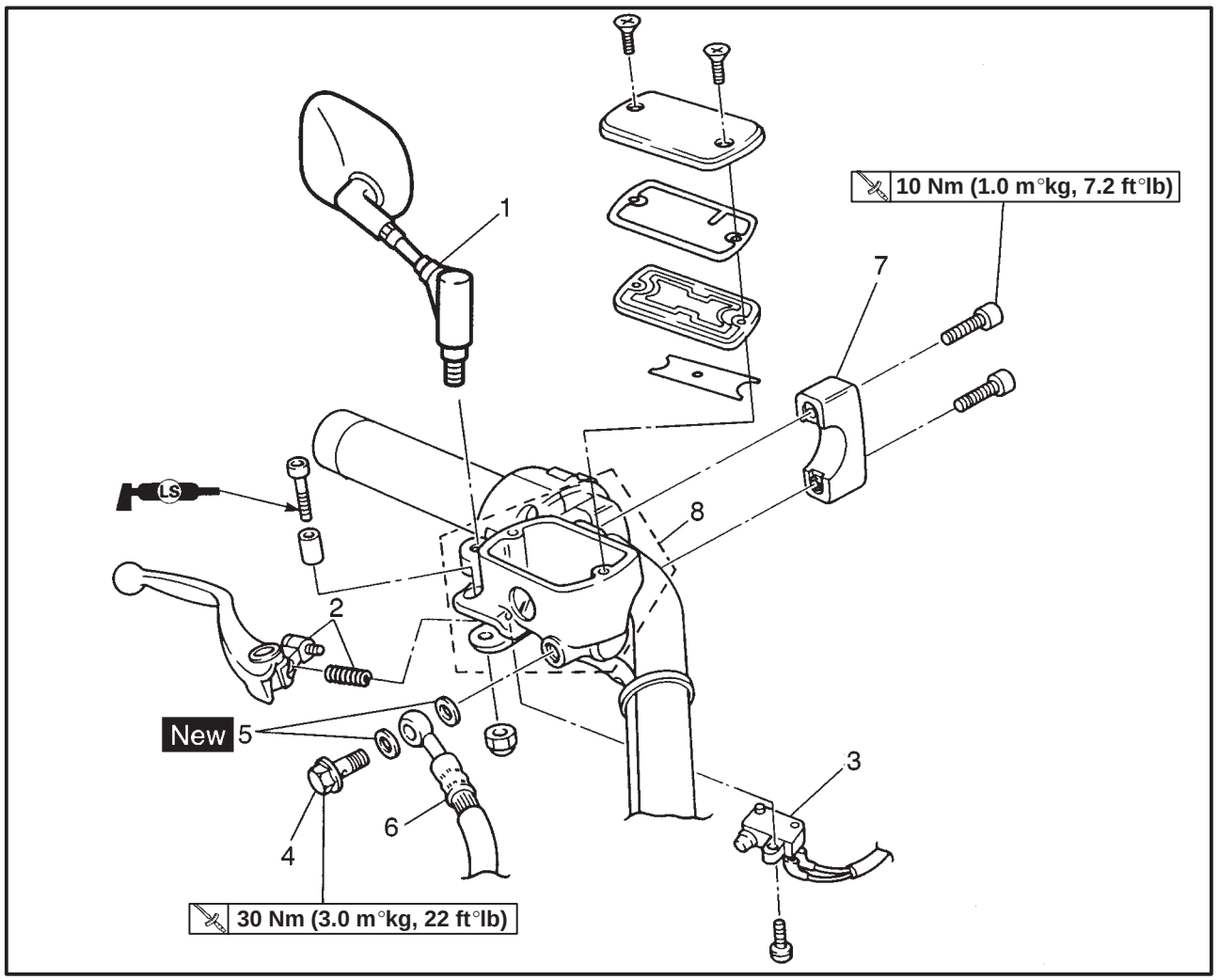

Order	Job name/Part name	Q'ty	Remarks
	Removing the front brake master cylinder.		Remove the parts in the order listed.
	Brake fluid		Drain
1	Rear view mirror (right)	1	
2	Brake lever/compression spring	1/1	
3	Front brake switch	1	
4	Union bolt	1	Refer to "REMOVING/INSTALLING THE FRONT BRAKE MASTER CYLINDER".
5	Copper washers	2	
6	Brake hose	1	
7	Master cylinder bracket	1	Reter to "INSTALLING THE FRONT BRAKE MASTER CYLINDER".
8	Master cylinder	1	
			For installation, reverse the removal procedure.

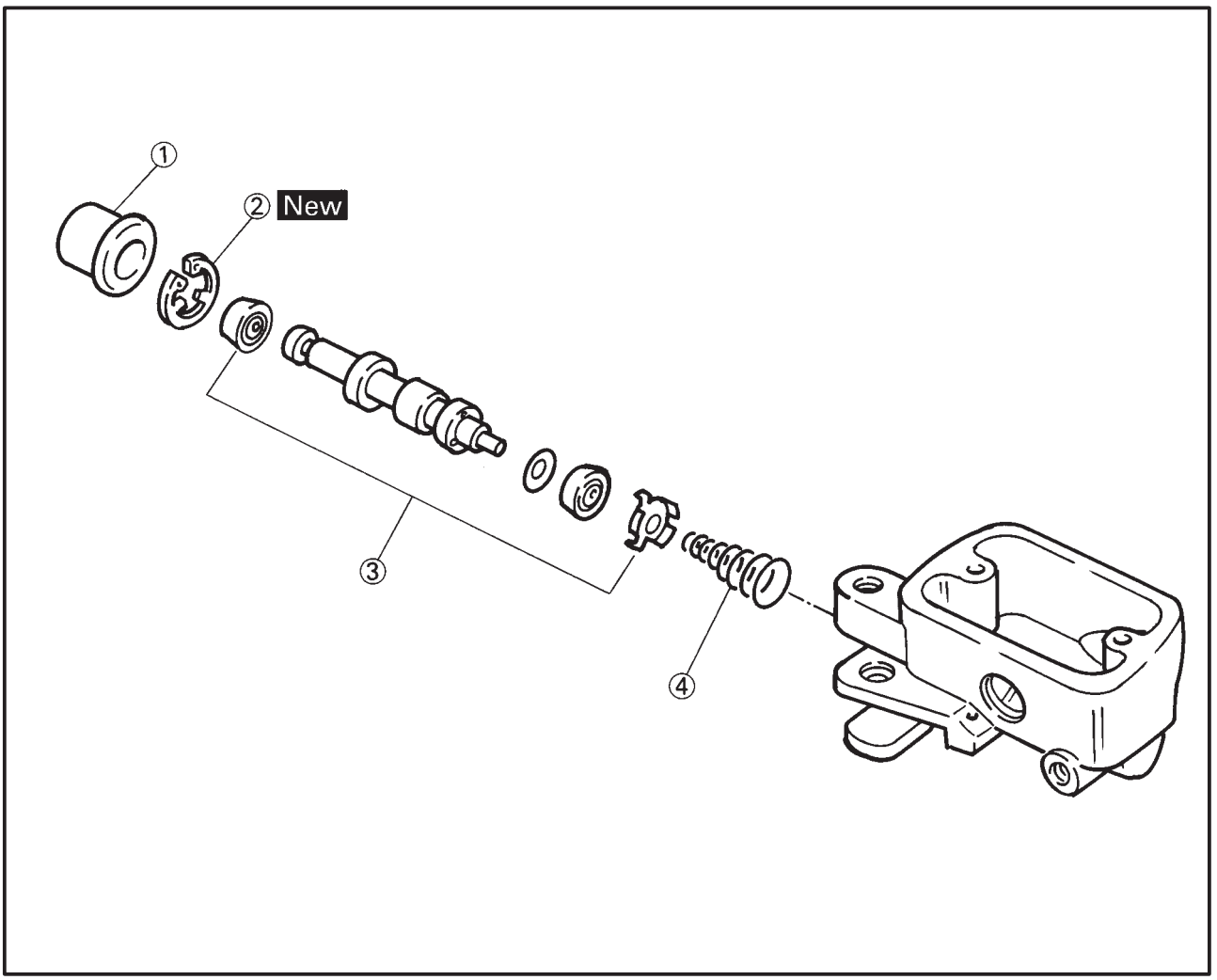

Order	Job name/Part name	Q'ty	Remarks
	Disassembling the front brake master cylinder		Remove the parts in the order listed.
①	Dust boot	1	
②	Circlip	1	
③	Master cylinder cup	1	
④	Spring	1	
			For assembly, reverse the disassembly procedure.

EAS00586

REAR BRAKE MASTER CYLINDER

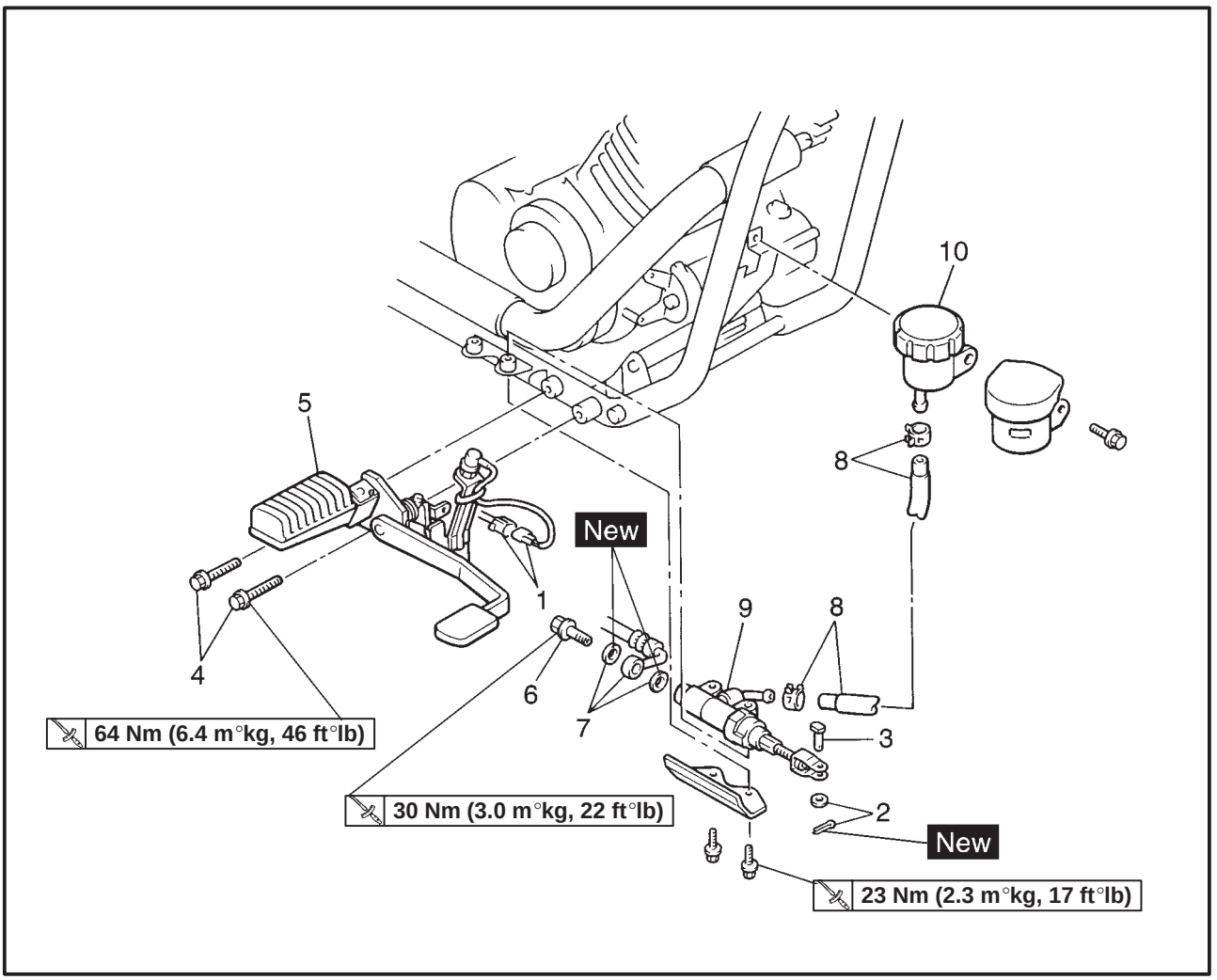

Order	Job name/Part name	Q'ty	Remarks
	Removing the rear brake master cylinder		Remove the parts in the order listed.
	Brake fluid		Drain
1	Brake switch connector	1	Disconnect
2	Cotter pin/washer	1/1	
3	Pin	1	
4	Bolts	2	
5	Brake pedal assembly	1	
6	Union bolt	1	Refer to "REMOVING/INSTALLING THE REAR BRAKE MASTER CYLINDER".
7	Copper washers/brake hose	2/1	
8	Clips/reservoir hose	2/1	
9	Master cylinder assembly	1	
10	Reservoir tank	1	
			For installation, reverse removal procedure.

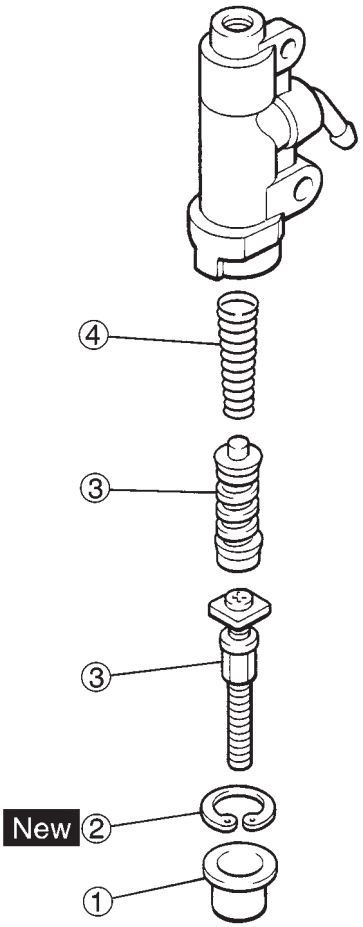

Order	Job name/Part name	Q'ty	Remarks
	Disassembling the rear brake master cylinder		Disassembly the parts in the order listed.
①	Master cylinder boot	1	
②	Circlip	1	
③	Master cylinder cup	1	
④	Spring	1	
			For assembly, reverse the disassembly procedure.

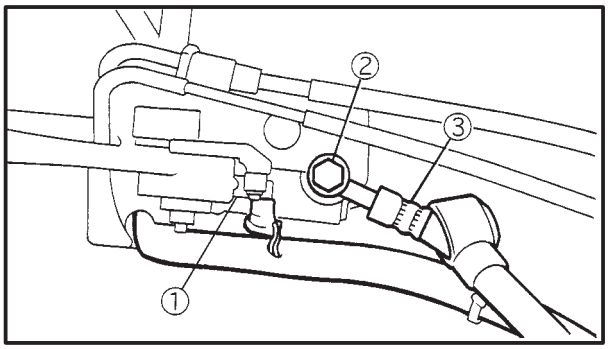

EAS00588

REMOVING THE FRONT BRAKE MASTER CYLINDER

NOTE:

Before removing the front brake master cylinder, drain the brake fluid from the entire brake system.

1. Remove:
   - rear view mirror (right)
   - brake lever/compression spring
   - brake switch ①
2. Remove:
   - union bolt ②
   - copper washers
   - brake hose ③

NOTE:

To collect any remaining brake fluid, place a container under the master cylinder and the end of the brake hose.

3. Remove:
   - master cylinder bracket
   - master cylinder

EAS00589

REMOVING THE REAR BRAKE MASTER CYLINDER

NOTE:

Before removing the rear brake master cylinder, drain the brake fluid from the entire brake system.

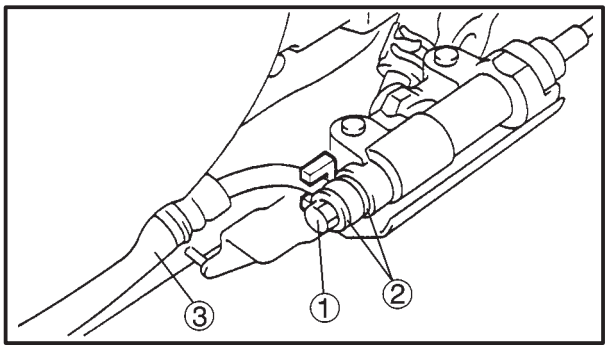

1. Remove:
   - brake switch connector
   - cotter pin/washer
   - pin
   - bolt/brake pedal assembly
2. Remove:
   - union bolt ①
   - copper washers ②
   - brake hose ③

NOTE:

To collect any remaining brake fluid, place a container under the master cylinder and the end of the brake hose.

3. Remove:
   - clips/reservoir hose
   - master cylinder assembly

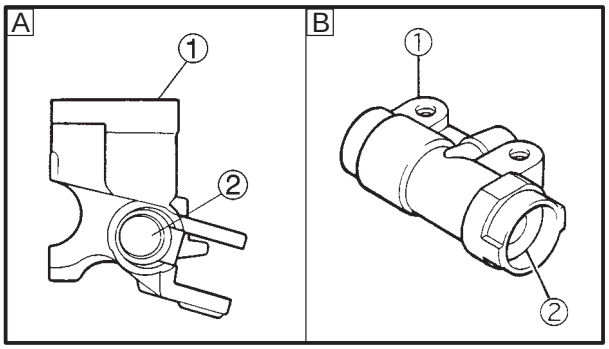

EAS00592

CHECKING THE FRONT AND REAR BRAKE MASTER CYLINDER

The following procedure applies to the both of the brake master cylinders.

1. Check:
   - brake master cylinder ①
     Damage/scratches/wear → Replace.
   - brake fluid delivery passages ②
     (brake master cylinder body)
     Obstruction → Blow out with compressed air.

A Front

B Rear

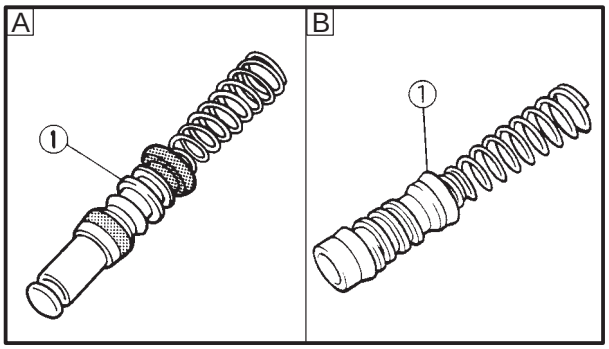

2. Check:
   - brake master cylinder kit ①
     Damage/scratches/wear → Replace.

A Front

B Rear

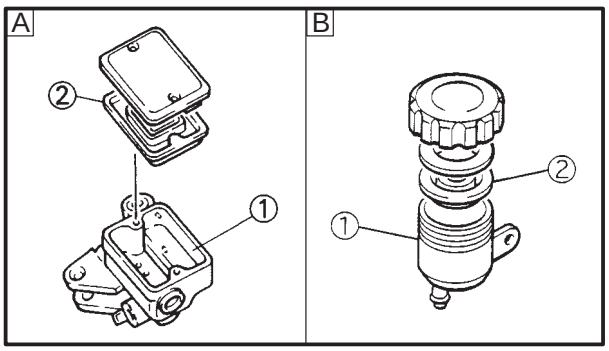

3. Check:
   - brake fluid reservoir ①
     Cracks/damage → Replace.
   - brake fluid reservoir diaphragm ②
     Cracks/damage → Replace.

A Front

B Rear

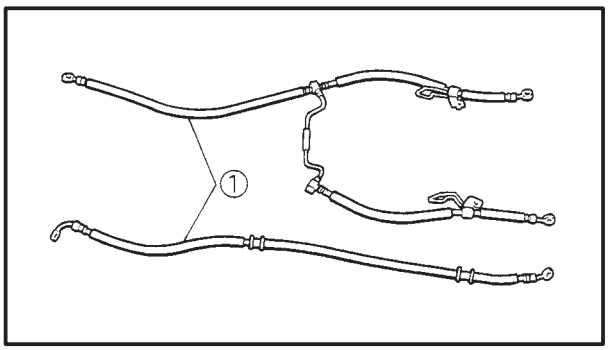

4. Check:
   - brake hoses ①
     Cracks/damage/wear → Replace.

EAS00598

INSTALLING THE FRONT BRAKE MASTER CYLINDER

WARNING

- **Before installation, all internal brake components should be cleaned and lubricated with clean or new brake fluid.**
- **Never use solvents on internal brake components.**

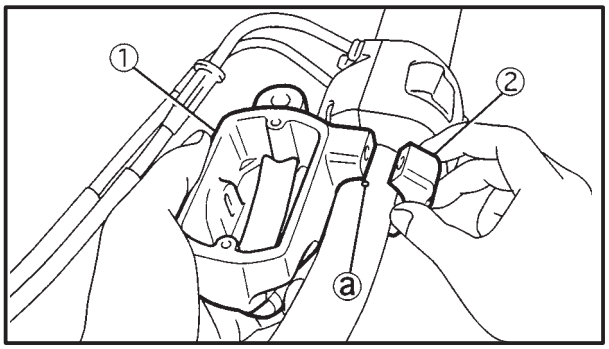

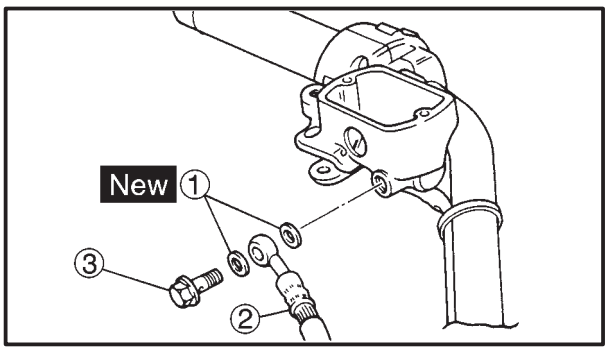

Recommended brake fluid
DOT 4

1. Install:
   - brake master cylinder ①
   - brake master cylinder bracket ②

   10 Nm (1.0 m·kg, 7.2 ft·lb)

NOTE:

- Install the brake master cylinder bracket with the “UP” mark facing up.
- Align the end of the brake master cylinder holder with the punch mark ⓐ on the handlebar.
- First, tighten the upper bolt, then the lower bolt.

2. Install:
   - copper washers (New) ①
   - brake hose ②
   - union bolt ③

   30 Nm (3.0 m·kg, 22 ft·lb)

WARNING

Proper brake hose routing is essential to insure safe motorcycle operation. Refer to “CABLE ROUTING”.

NOTE:

- While holding the brake hose, tighten the union bolt as shown.
- Turn the handlebar to the left and to the right to make sure that the brake hose does not touch other parts (e. g., wire harness, cables, leads). Correct if necessary.

3. Fill:
   - brake master cylinder reservoir
     (with the specified amount of the recommended brake fluid)

Recommended brake fluid
DOT 4

WARNING

- **Use only the designated brake fluid. Other brake fluids may cause the rubber seals to deteriorate, causing leakage and poor brake performance.**
- **Refill with the same type of brake fluid that is already in the system. Mixing brake fluids may result in a harmful chemical reaction, leading to poor brake performance.**
- **When refilling, be careful that water does not enter the reservoir. Water will significantly lower the boiling point of the brake fluid and could cause vapor lock.**

CAUTION:

Brake fluid may damage painted surfaces and plastic parts. Therefore, always clean up any spilt brake fluid immediately.

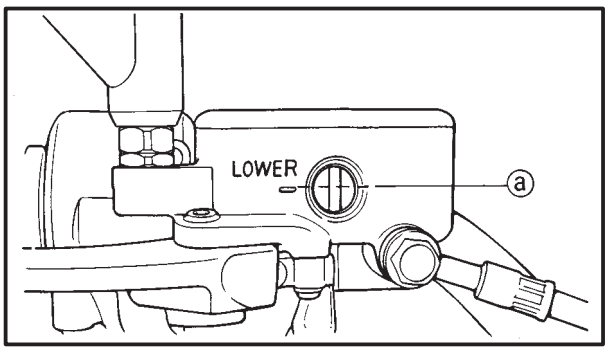

4. Bleed:
   - brake system
     Refer to “BLEEDING THE HYDRAULIC BRAKE SYSTEM” in chapter 3.
5. Check:
   - brake fluid level
     Below the minimum level mark ⓐ → Add the recommended brake fluid to the proper level.
     Refer to “CHECKING THE BRAKE FLUID LEVEL” in chapter 3.
6. Check:
   - brake lever operation
     Soft or spongy feeling → Bleed the brake system.
     Refer to “BLEEDING THE HYDRAULIC BRAKE SYSTEM” in chapter 3.

EAS00610

INSTALLING THE REAR BRAKE MASTER CYLINDER

1. Install:
   - copper washers (New)
   - brake hose

	Union bolt **30 Nm (3.0 m°kg, 22 ft°lb)**

WARNING

Proper brake hose routing is essential to insure safe motorcycle operation. Refer to "CABLE ROUTING".

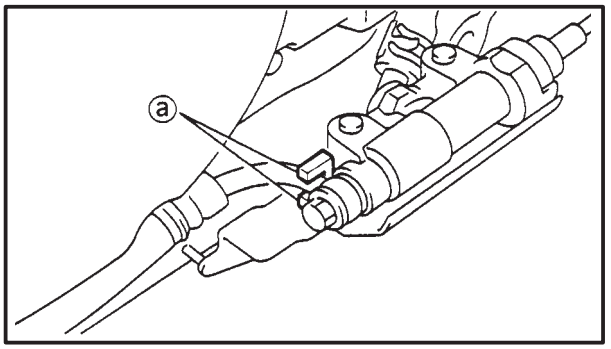

CAUTION:

When installing the brake hose onto the brake master cylinder make sure that the brake pipe touches the projections ⓐ as shown.

2. Fill:
   - brake fluid reservoir
     (to the maximum level mark)

	Recommended brake fluid **DOT 4**

WARNING

- **Use only the designated brake fluid. Other brake fluids may cause the rubber seals to deteriorate, causing leakage and poor brake performance.**
- **Refill with the same type of brake fluid that is already in the system. Mixing brake fluids may result in a harmful chemical reaction, leading to poor brake performance.**
- **When refilling, be careful that water does not enter the reservoir. Water will significantly lower the boiling point of the brake fluid and could cause vapor lock.**

CAUTION:

Brake fluid may damage painted surfaces and plastic parts. Therefore, always clean up any spilt brake fluid immediately.

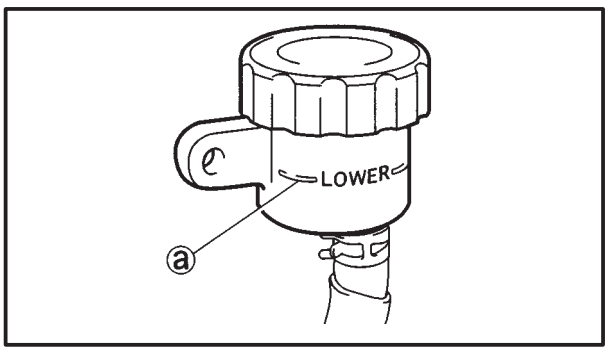

3. Bleed:
   - brake system
     Refer to "BLEEDING THE HYDRAULIC BRAKE SYSTEM" in chapter 3.
4. Check:
   - brake fluid level
     Below the minimum level mark ⓐ → Add the recommended brake fluid to the proper level.
     Refer to "CHECKING THE BRAKE FLUID LEVEL" in chapter 3.

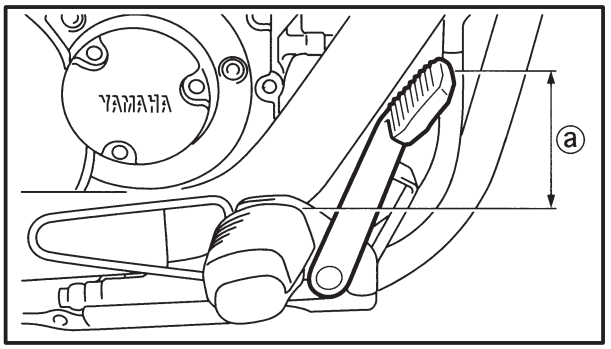

5. Adjust:
   - brake pedal position ⓐ
     Refer to “ADJUSTING THE REAR BRAKE” in chapter 3.

Brake pedal position (below the top of the rider footrest)
81.8 mm (3.22 in)

6. Adjust:
   - rear brake light operation timing
     Refer to “ADJUSTING THE REAR BRAKE LIGHT SWITCH” in chapter 3.

FRONT BRAKE CALIPERS

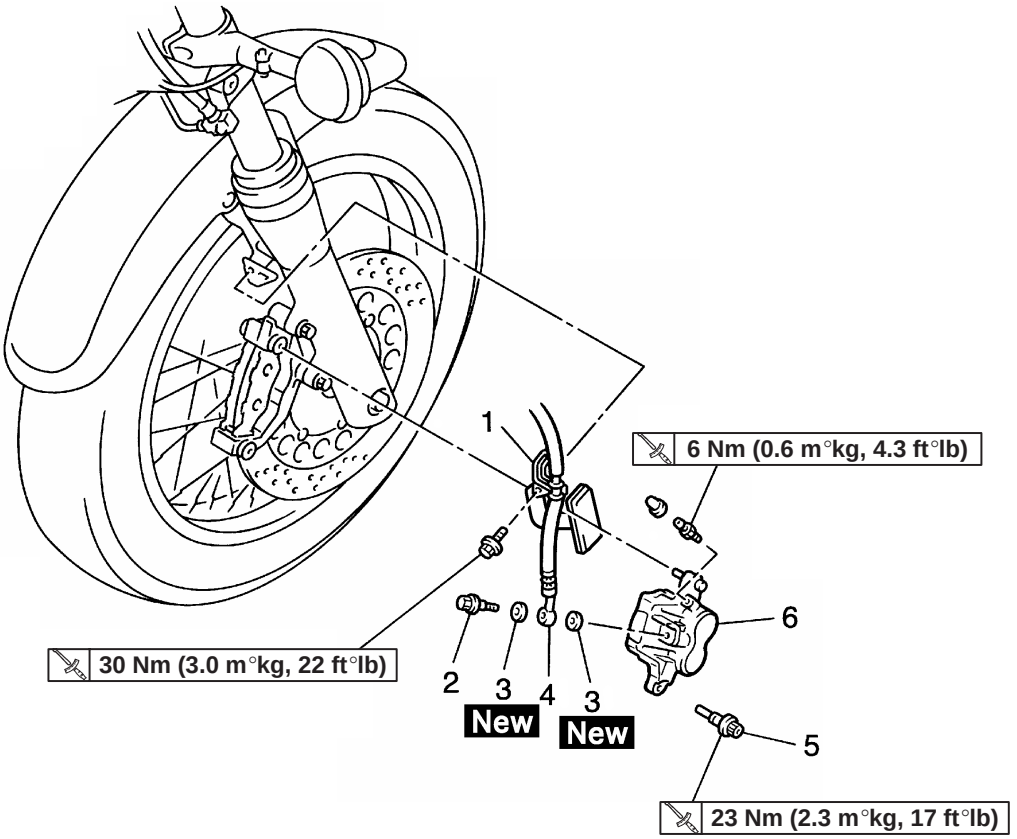

Order	Job name/Part name	Q'ty	Remarks
	Removing the front brake calipers		Remove the parts in the order listed.
	Brake fluid		Drain
1	Brake hose holder	1	
2	Union bolt	1	Refer to "REMOVING/INSTALLING THE FRONT BRAKE CALIPERS".
3	Copper washers	2	
4	Brake hose	1	
5	Retaining bolt	1	
6	Brake caliper assembly	1	
			For installation, reverse the removal procedure.

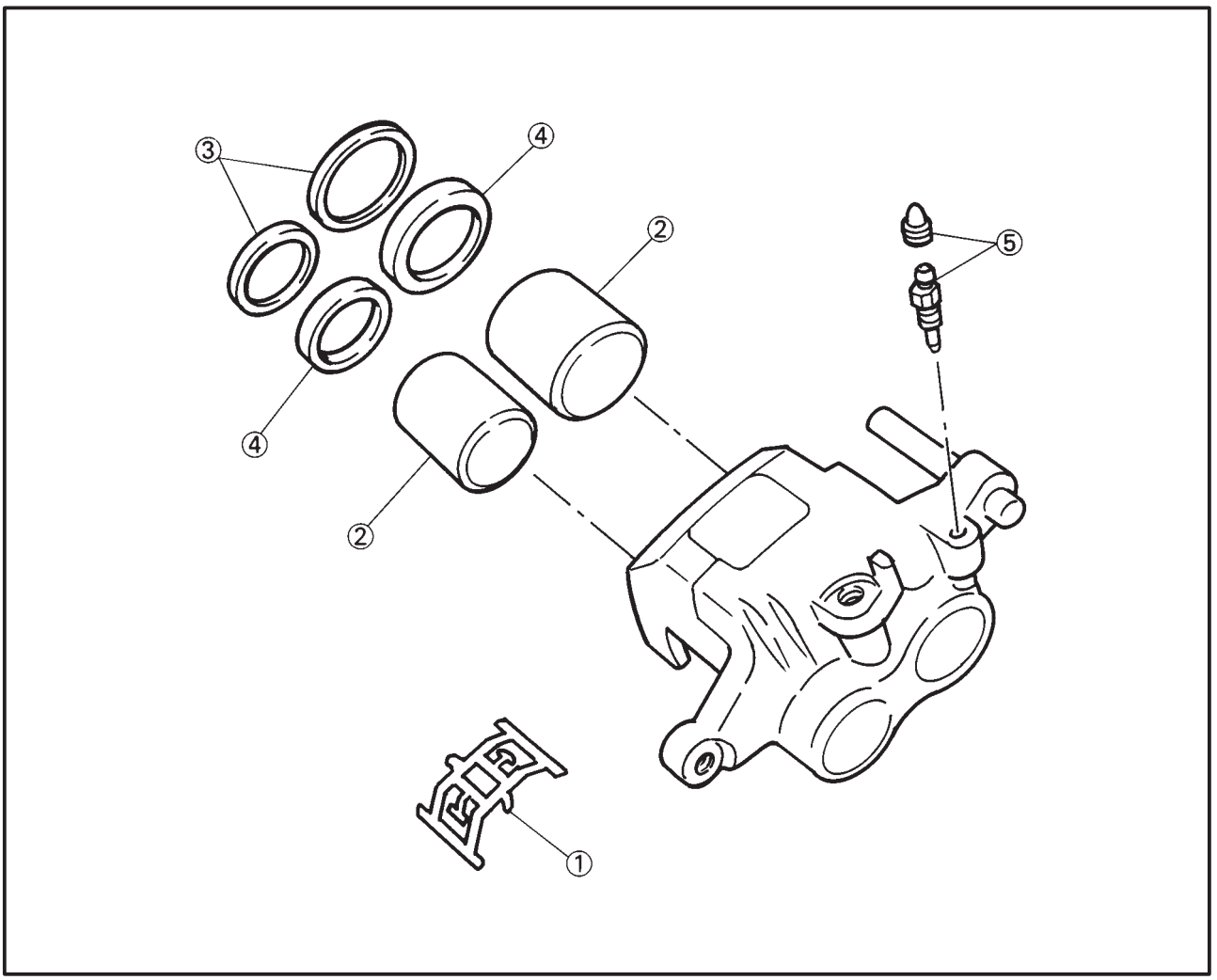

Order	Job name/Part name	Q'ty	Remarks
	Disassembling the front brake calipers		Remove the parts in the order listed.
①	Pad spring	1	
②	Brake caliper pistons	2	Refer to "REMOVING THE FRONT BRAKE CALIPERS".
③	Dust seals	2	
④	Caliper piston seals	2	
⑤	Bleed screw	1	
			For assembly, reverse the disassembly procedure.

ESA00616

REAR BRAKE CALIPER

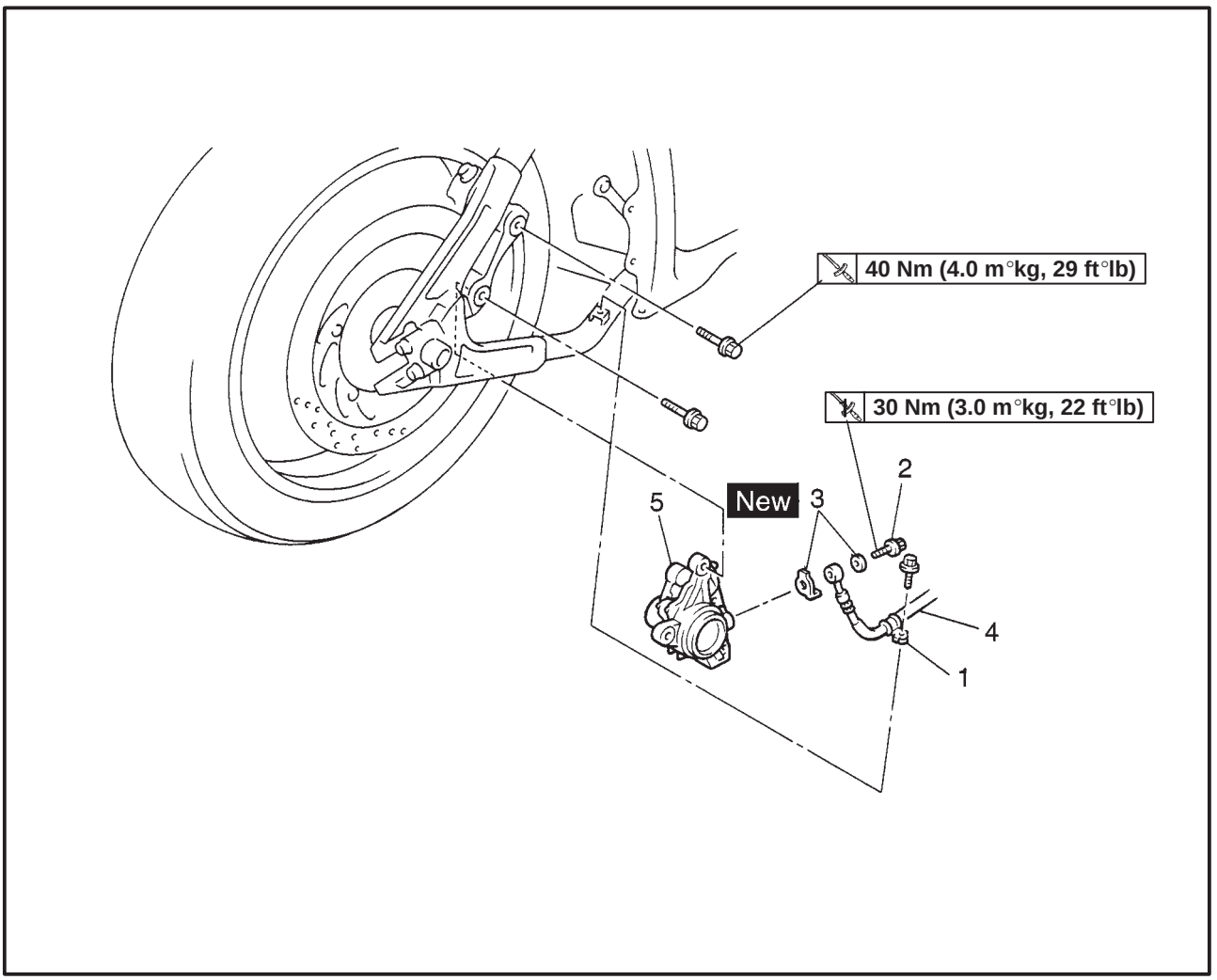

Order	Job name/Part name	Q'ty	Remarks
	Removing the rear brake caliper		Remove the parts in the order listed.
	Muffler		Refer to "REAR WHEEL AND BRAKE DISC".
	Muffler stay		
	Brake fluid		Drain
1	Brake hose holder	1	
2	Union bolt	1	Refer to "REMOVING/INSTALLING THE REAR BRAKE CALIPER".
3	Copper washers	2	
4	Brake hose	1	
5	Brake caliper assembly	1	
			For installation, reverse the removal procedure.

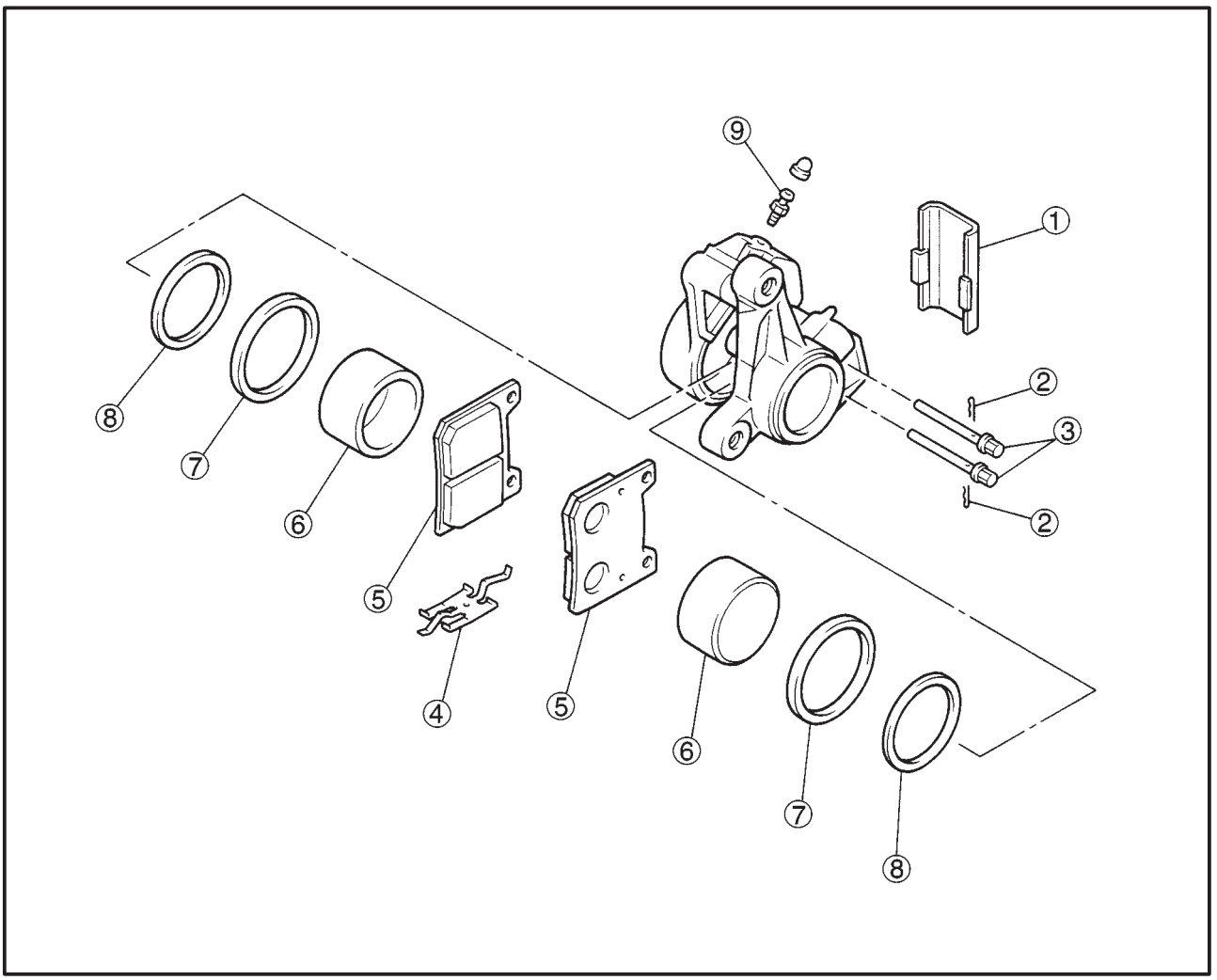

Order	Job name/Part name	Q'ty	Remarks
	Disassembling the rear brake caliper		Disassembly the parts in the order listed.
①	Cover	1	
②	Clips	2	
③	Pad pins	2	
④	Pad spring	1	
⑤	Brake pads	2	
⑥	Caliper pistons	2	Refer to "DISASSEMBLING THE REAR BRAKE CALIPER".
⑦	Dust seals	2	
⑧	Piston seals	2	
⑨	Bleed screw	1	
			For assembly, reverse the disassembly procedure.

EAS00624

REMOVING THE FRONT BRAKE CALIPERS

The following procedure applies to both of the brake calipers.

NOTE:

Before removing either brake caliper, drain the brake fluid from the entire brake system.

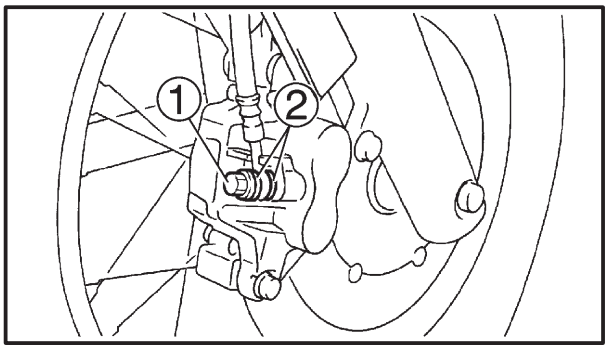

1. Remove:
   - brake hose holder
   - union bolt ①
   - copper washers ②
   - brake hose

NOTE:

Put the end of the brake hose into a container and pump out the brake fluid carefully.

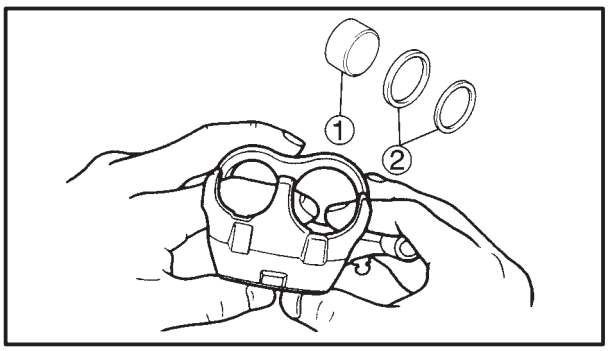

2. Remove:
   - brake caliper pistons ①
   - brake caliper piston seals ②

a. Blow compressed air into the brake hose joint opening to force out the pistons from the brake caliper.

WARNING

- **Cover the brake caliper piston with a rag. Be carful not to get injured when the piston is expelled from the brake caliper cylinder.**
- **Never try to pry out the brake caliper pistons.**

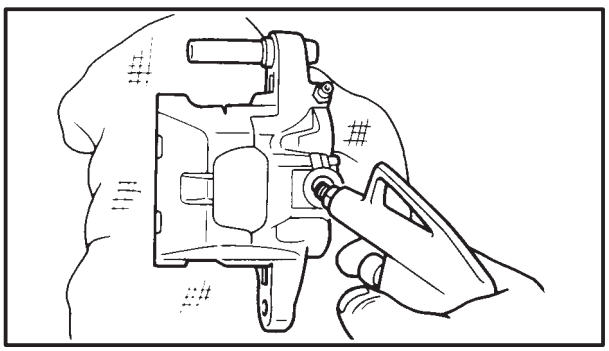

b. Remove the brake caliper piston seals.

EAS00628

REMOVING THE REAR BRAKE CALIPER

NOTE:

Before removing the brake caliper, drain the brake fluid from the entire brake system.

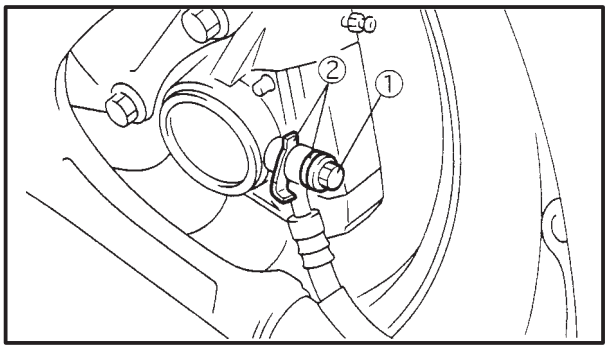

1. Remove:
   - °union bolt ①
   - °copper wachers ②
   - °brake hose

NOTE:

Put the end of the brake hose into a container and pump out the brake fluid carefully.

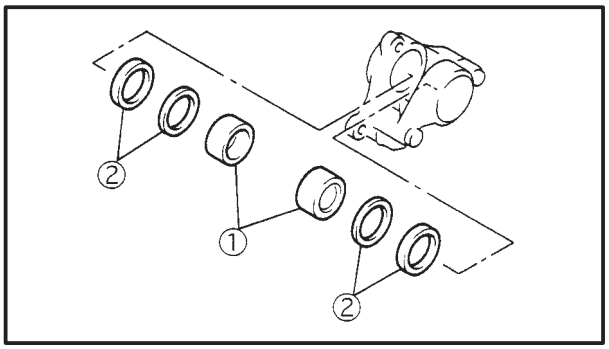

2. Remove:
   - °brake caliper pistons ①
   - °brake caliper pistons seals ②

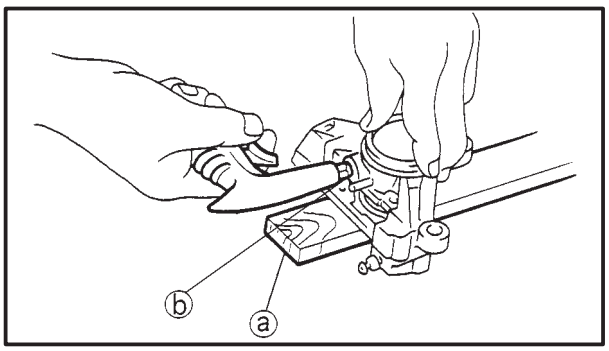

▼▼▼▼▼▼▼▼▼▼▼▼▼▼▼▼▼▼▼▼▼▼▼▼▼▼▼▼▼▼▼▼

a. Secure the right side brake caliper piston with a piece of wood ⓐ.
b. Blow compressed air into the brake hose joint opening ⓑ to force out the left side piston from the brake caliper.

⚠ WARNING

- °**Never try to pry out the brake caliper pistons.**
- °**Do not loosen the bolts.**

c. Remove the brake caliper piston seals.
d. Repeat the previous steps to force out the right side piston from the brake caliper.

▲▲▲▲▲▲▲▲▲▲▲▲▲▲▲▲▲▲▲▲▲▲▲▲▲▲▲▲▲▲▲▲

EAS00633

CHECKING THE FRONT AND REAR BRAKE CALIPERS

Recommended brake component replacement schedule:	
Brake pads	**If necessary**
Piston seals	**Every two years**
Brake hoses	**Every two years**
Brake fluid	**Every two years and whenever the brake is disassembled.**

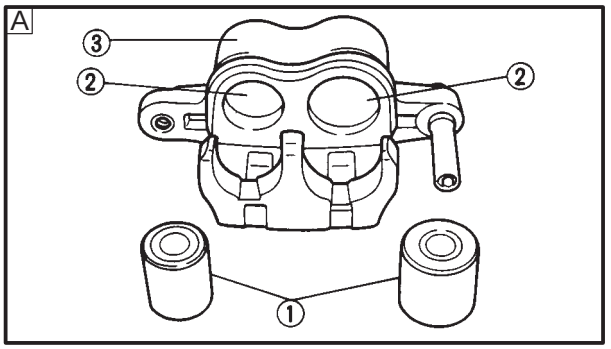

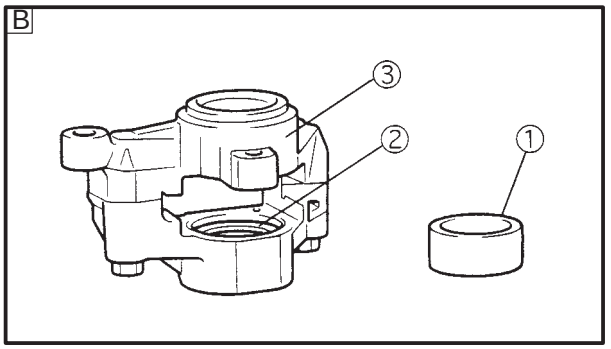

1. Check:
   - brake caliper pistons ①
     Rust/scratches/wear → Replace the brake caliper piston assembly.
   - brake caliper cylinders ②
     Scratches/wear → Replace the brake caliper.
   - brake calipers ③
     Cracks/damage → Replace.
   - brake fluid delivery passages (brake caliper body)
     Obstruction → Blow out with compressed air.

WARNING

Whenever a brake caliper is disassembled, replace the brake caliper piston seals.

A Front

B Rear

2. Check:
   - brake caliper brackets
     Cracks/damage → Replace.

EAS00638

INSTALLING THE FRONT BRAKE CALIPERS

The following procedure applies to both of the brake calipers.

WARNING

- **Before installation, all internal brake components should be cleaned and lubricated with clean or new brake fluid.**
- **Never use solvents on internal brake components as they will cause the piston seals to swell and distort.**
- **Whenever a brake caliper is disassembled, replace the brake caliper piston seals.**

	Recommended brake fluid **DOT 4**

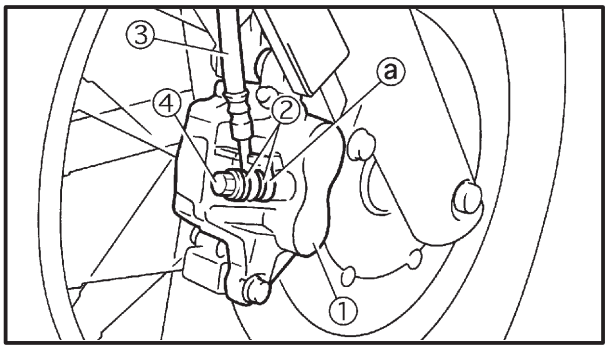

1. Install:
   - brake caliper ① (temporarily)
   - copper washers (New) ②
   - brake hose ③
   - union bolt ④ **30 Nm (3.0 m°kg, 22 ft°lb)**

⚠ WARNING

Proper brake hose routing is essential to insure safe motorcycle operation. Refer to "CABLE ROUTING".

CAUTION:

When installing the brake hose onto the brake caliper ①, make sure that the brake pipe touches the projection ⓐ on the brake caliper.

2. Install:
   - brake caliper retaining bolt **23 Nm (2.3 m°kg, 17 ft°lb)**
   - brake hose holder
     Refer to "FRONT BRAKE PADS".
3. Fill:
   - brake master cylinder reservoir
     (with the specified amount of the recommended brake fluid)

Recommended brake fluid
DOT 4

⚠ WARNING

- **Use only the designated brake fluid. Other brake fluids may cause the rubber seals to deteriorate, causing leakage and poor brake performance.**
- **Refill with the same type of brake fluid that is already in the system. Mixing brake fluids may result in a harmful chemical reaction, leading to poor brake performance.**
- **When refilling, be careful that water does not enter the reservoir. Water will significantly lower the boiling point of the brake fluid and could cause vapor lock.**

CAUTION:

Brake fluid may damage painted surfaces and plastic parts. Therefore, always clean up any spilt brake fluid immediately.

4. Bleed:
   - brake system
     Refer to “BLEEDING THE HYDRAULIC BRAKE SYSTEM” in chapter 3.

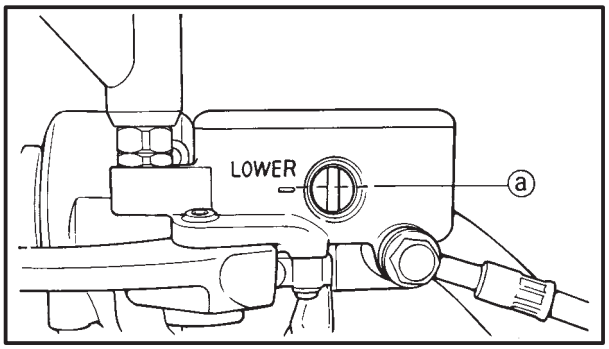

5. Check:
   - brake fluid level
     Below the minimum level mark ⓐ → Add the recommended brake fluid to the proper level.
     Refer to “CHECKING THE BRAKE FLUID LEVEL” in chapter 3.
6. Check:
   - brake lever operation
     Soft or spongy feeling → Bleed the brake system.
     Refer to “BLEEDING THE HYDRAULIC BRAKE SYSTEM” in chapter 3.

EAS00642

INSTALLING THE REAR BRAKE CALIPER

WARNING

- **Before installaiton, all internal brake components should be cleaned and lubricated with clean or new brake fluid.**
- **Never use solvents on internal brake components as they will cause the piston seals to swell and distort.**
- **Whenever a brake caliper is disassembled, replace the brake caliper piston seals.**

Recommended brake fluid
DOT 4

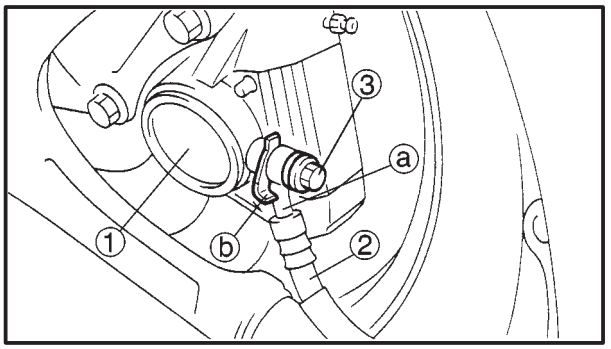

1. Install:
   - brake caliper ① (temporarily)
   - copper washers New
   - brake hose ②
   - union bolt ③ — 30 Nm (3.0 m·kg, 22 ft·lb)

WARNING

Proper brake hose routing is essential to insure safe motorcycle operation. Refer to "CABLE ROUTING".

CAUTION:

When installing the brake hose onto the brake caliper ①, make sure that the brake pipe ⓐ touches the projection ⓑ on the copper washer.

2. Install:
   - brake caliper — 40 Nm (4.0 m·kg, 29 ft·lb)
   - brake hose holder

   Refer to "REAR BRAKE PADS".
3. Fill:
   - brake fluid reservoir (with the specified amount of the recommended brake fluid)

Recommended brake fluid
DOT 4

WARNING

- **Use only the designated brake fluid. Other brake fluids may cause the rubber seals to deteriorate, causing leakage and poor brake performance.**
- **Refill with the same type of brake fluid that is already in the system. Mixing brake fluids may result in a farmful chemical reaction, leading to poor brake performance.**
- **When refilling, be careful that water does not enter the brake fluid reservoir. Water will signicantly lower the boiling point of the brake fluid and could cause vapor lock.**

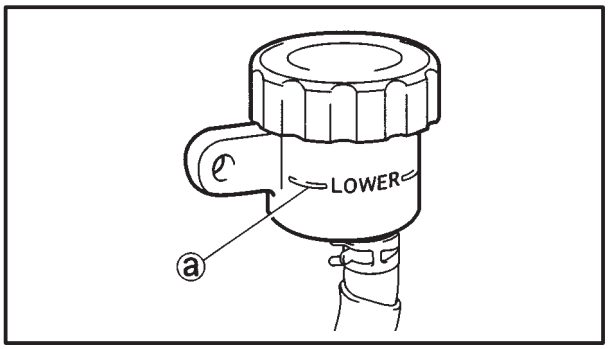

CAUTION:

Brake fluid may damage painted surfaces and plastic parts. Therefore, always clean up any spilt brake fluid immediately.

4. Bleed:
   - brake system

NOTE:

- Place the motorcycle on a suitable stand.
- Make sure that the motorcycle is upright.

Refer to “BLEEDING THE HYDRAULIC BRAKE SYSTEM” in chapter 3.

5. Check:
   - brake fluid level
     Below the minimum level mark ⓐ → Add the recommended brake fluid to the proper level.
     Refer to “CHECKING THE BRAKE FLUID LEVEL” in chapter 3.
6. Check:
   - brake pedal operation
     Soft or spongy feeling → bleed the brake system.
     Refer to “BLEEDING THE HYDRAULIC BRAKE SYSTEM” in chapter 3.

FRONT FORK

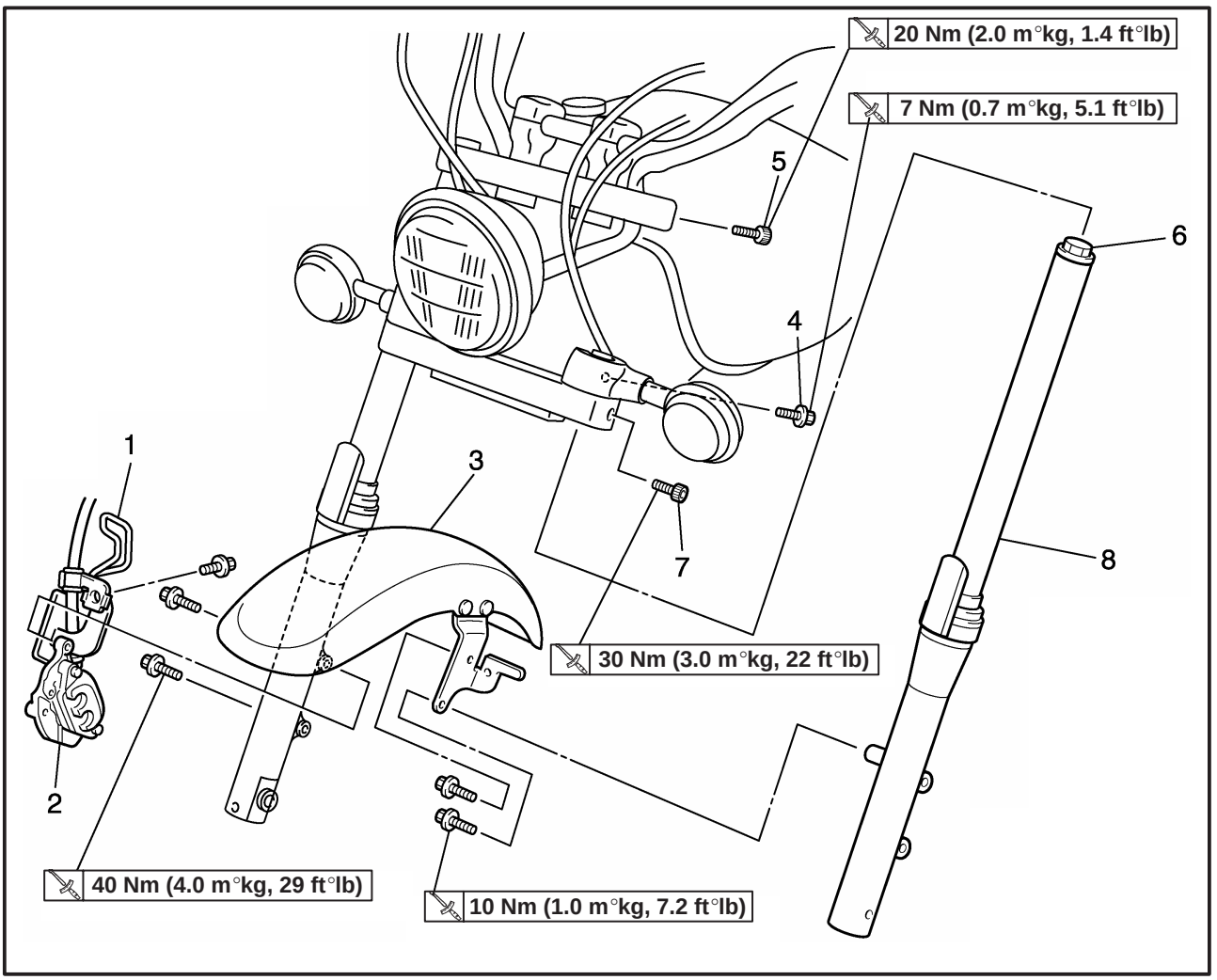

Order	Job name/Part name	Q'ty	Remarks
	Removing the front fork Front wheel		Remove the parts in the order listed. Refer to "FRONT WHEEL AND BRAKE DISCS".
1	Brake hose holders	2	
2	Brake caliper assembly	2	
3	Front fender	1	
4	Turn signal light bolts	2	Refer to "REMOVING/INSTALLING THE FRONT FORK LEGS".
5	Upper bracket bolts	2	
6	Cap bolts	2	
7	Lower bracket bolts	2	
8	Front fork legs	2	
			For installation, reverse the removal procedure.

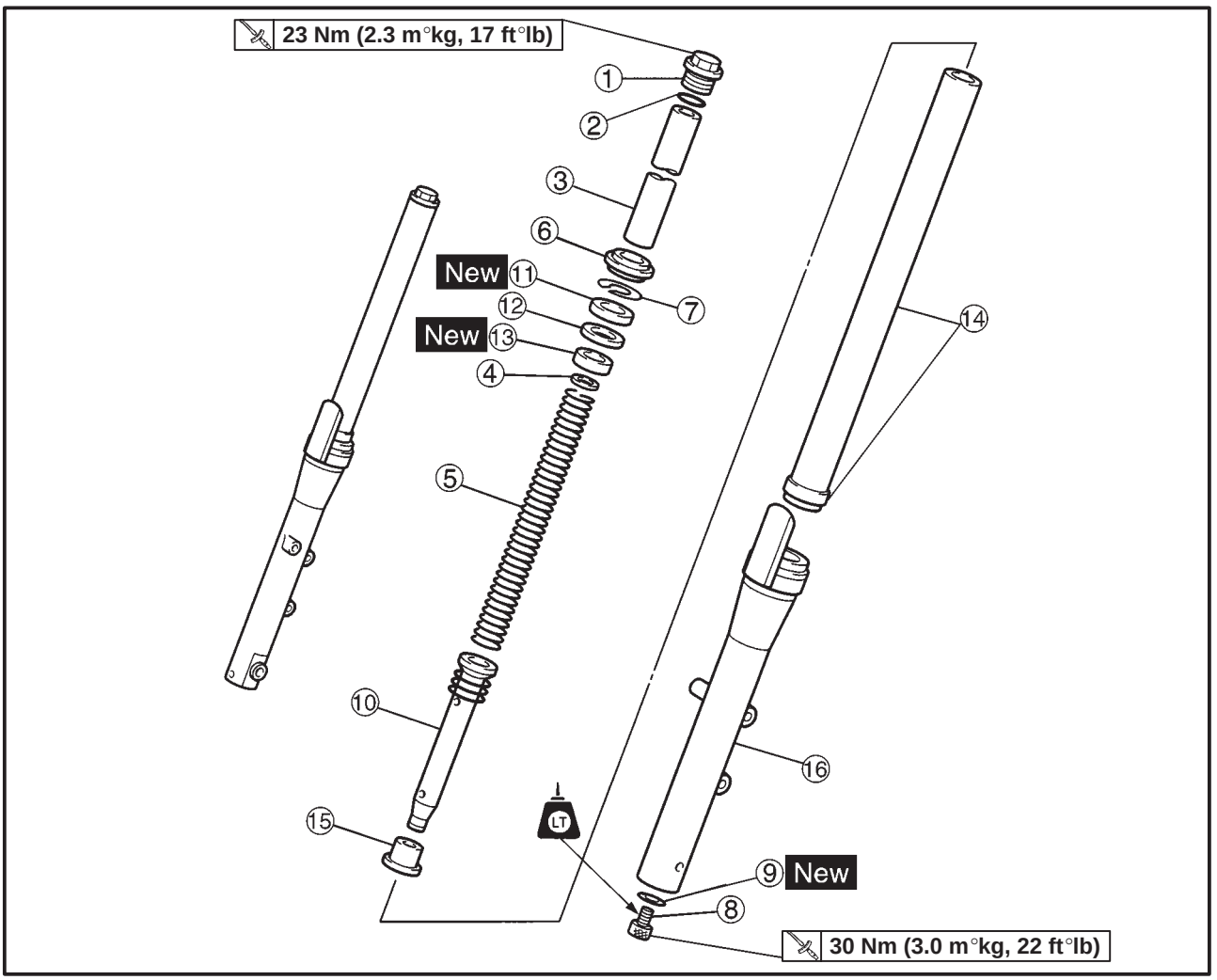

Order	Job name/Part name	Q'ty	Remarks
	Disassembling the front fork		Disassemble the parts in the order listed.
①	Cap bolt	1	Refer to "DISASSEMBLING/ASSEMBLING THE FRONT FORK LEGS".
②	O-ring	1	
③	Spacer	1	
④	Spring seat	1	
⑤	Fork spring	1	
⑥	Dust seal	1	
⑦	Oil seal clip	1	
⑧	Damper rod bolt	1	
⑨	Copper washer	1	
⑩	Damper rod/rebound spring	1/1	
⑪	Oil seal	1	

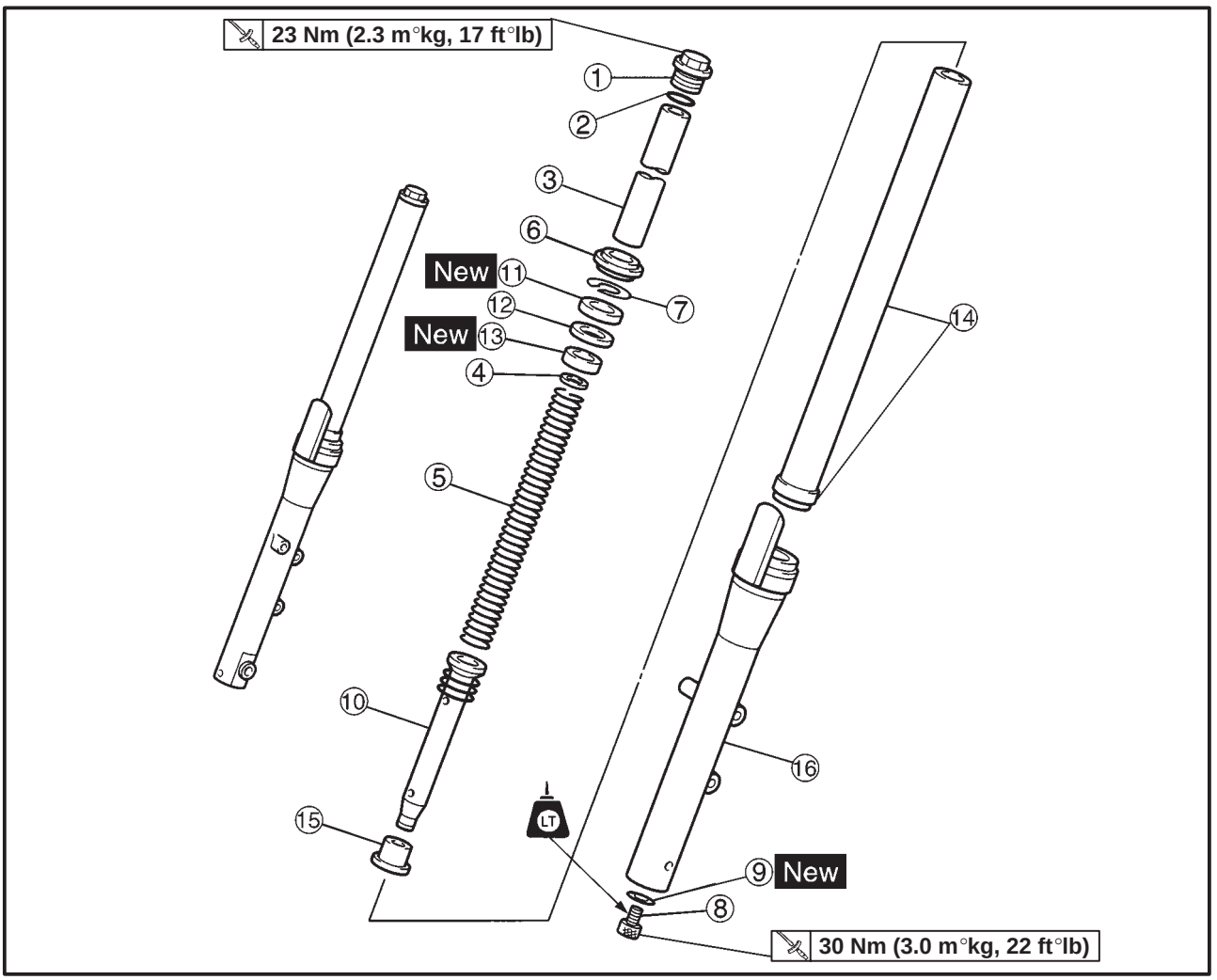

Order	Job name/Part name	Q'ty	Remarks
⑫	Seal spacer	1	Refer to "DISASSEMBLING/ASSEMBLING THE FRONT FORK LEGS".
⑬	Outer tube bushing	1	
⑭	Inner tube/inner tube bushing	1/1	
⑮	Oil lock piece	1	
⑯	Outer tube	1	
			For assembly, reverse the disassembly procedure.

EAS00649

REMOVING THE FRONT FORK LEGS

The following procedure applies to both of the front fork legs.

1. Stand the motorcycle on a level surface.

WARNING

Securely support the motorcycle so that there is no danger of it falling over.

NOTE:

Place the motorcycle on a suitable stand so that the front wheel is elevated.

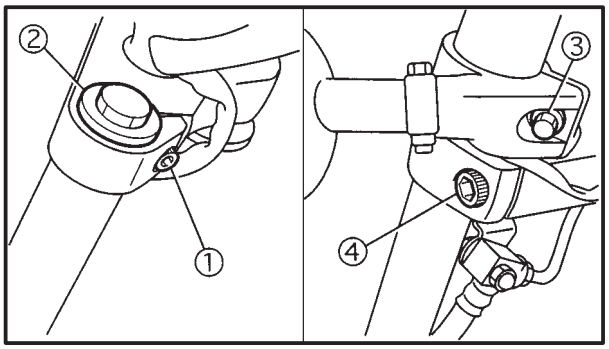

2. Loosen:
   - upper bracket pinch bolt ①
   - cap bolt ②
   - turn signal light bolt ③
   - lower bracket pinch bolt ④

WARNING

Before loosening the upper and lower bracket pinch bolts, support the front fork leg.

3. Remove:
   - front fork leg

EAS00653

DISASSEMBLING THE FRONT FORK LEGS

The following procedure applies to both of the front fork legs.

1. Remove:
   - cap bolt
   - O-ring
   - spacer
   - spring seat
   - fork spring
2. Drain
   - fork oil
3. Remove:
   - dust seal ①
   - oil seal clip ②
     (with a flat-head screwdriver)

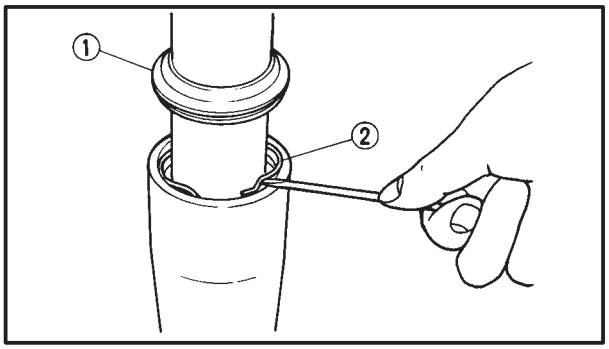

CAUTION:

Do not scratch the inner tube.

NOTE:

- Do not remove the front fork leg protector from the outer tube.
- If the front fork leg protector must be removed, always install a new one.

4. Remove:
   - damper rod bolt
   - copper washer

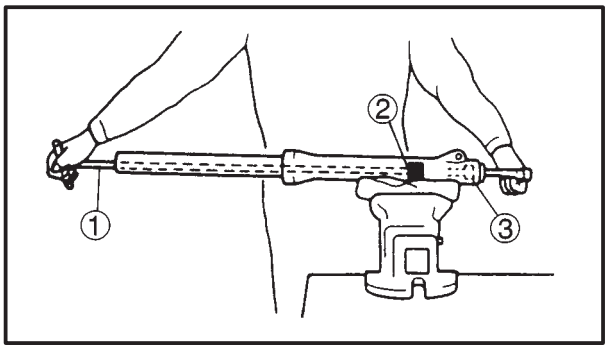

NOTE:

While holding the damper rod with the T-handle ① and damper rod holder ②, loosen the damper rod bolt ③.

T-handle
YM-01326, 90890-01326
Damper rod holder
YM-1300-1, 90890-01460

6. Remove:
   - inner tube

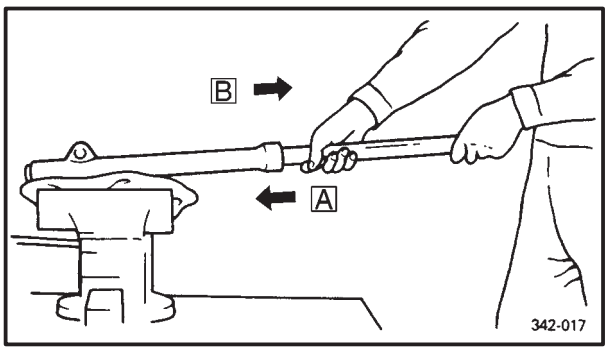

a. Hold the front fork leg horizontally.
b. Slowly push A the inner tube into the outer tube and just before it bottoms out, pull B the inner tube back quickly.
c. Repeat this step until the inner tube separates from the outer tube.

EAS00657

CHECKING THE FRONT FORK LEGS

The following procedure applies to both of the front fork legs.

1. Check:
   - inner tube ①
   - outer tube ②

   Bends/damage/scratches → Replace.

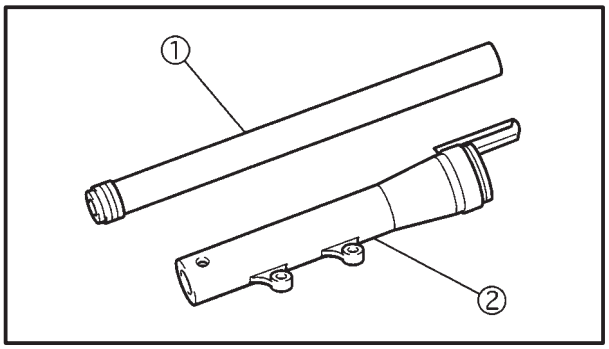

WARNING

Do not attempt to straighten a bent inner tube as this may dangerously weaken it.

2. Measure:
   - spring free length ⓐ

   Over the specified limit → Replace.

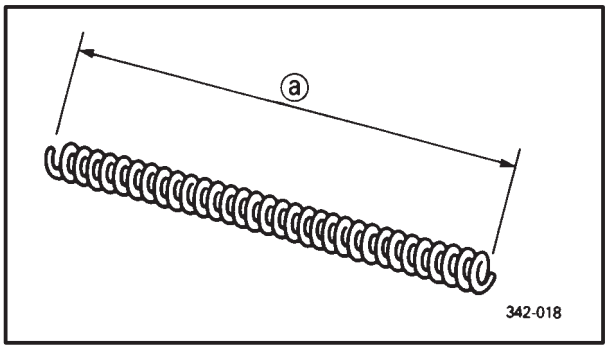

Spring free length limit
350 mm (13.78 in)

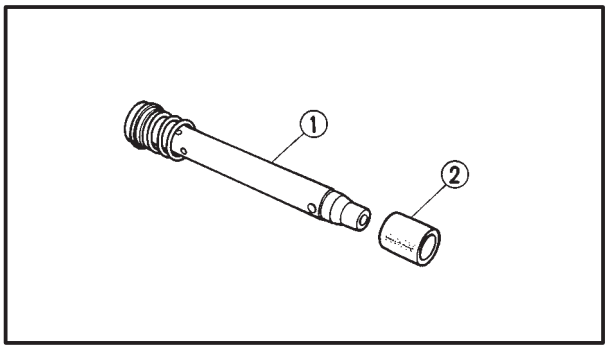

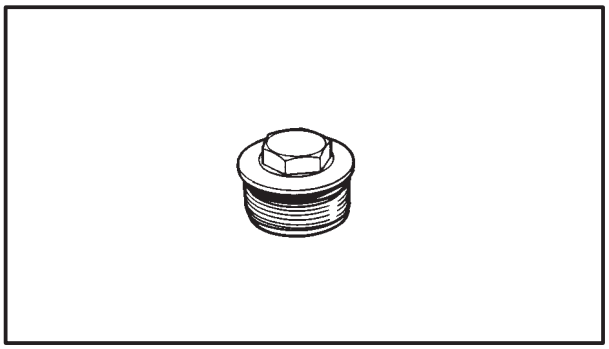

3. Check:
   - damper rod ①
     Damage/wear → Replace.
     Obstruction → Blow out all of the oil passages with compressed air.
   - oil lock piece ②
     Damage → Replace.

CAUTION:

When disassembling and assembling the front fork leg, do not allow any foreign material to enter the front fork.

4. Check:
   - cap bolt
   - O-ring
     Damage/wear → Replace.

EAS00659

ASSEMBLING THE FRONT FORK LEGS

The following procedure applies to both of the front fork legs.

WARNING

- **Make sure that the oil levels both front fork legs are equal.**
- **Uneven oil levels can result in poor handling and a loss of stability.**

NOTE:

- When assembling the front fork leg, be sure to replace the following parts:
  –inner tube bushing
  –outer tube bushing
  –oil seal
  –dust seal
- Before assembling the front fork leg, make sure that all of the components are clean.

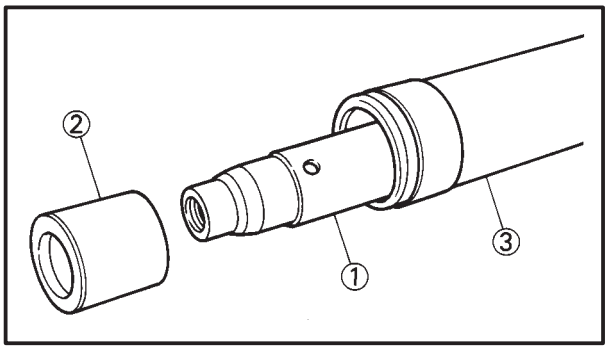

1. Install:
   - damper rod ①
   - oil lock piece ②

WARNING

Always use new copper washers.

CAUTION:

Allow the damper rod to slide slowly down the inner tube ③ until it protrudes from the bottom of the inner tube. Be careful not to damage the inner tube.

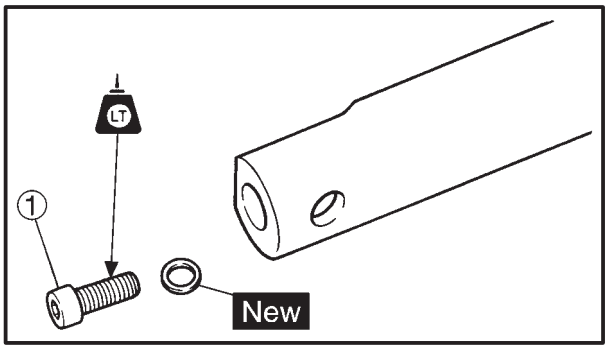

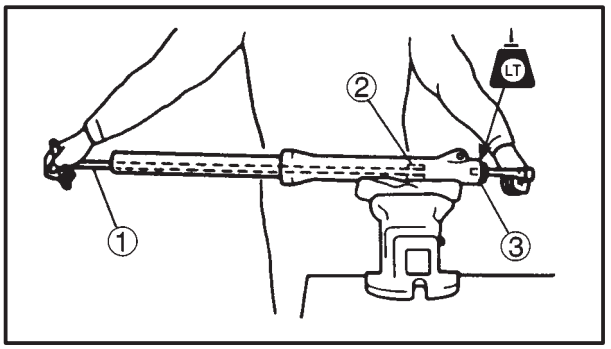

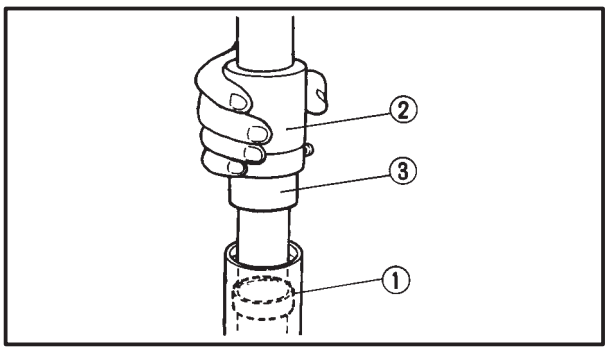

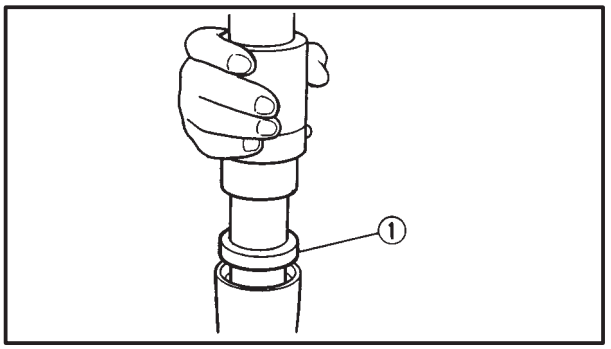

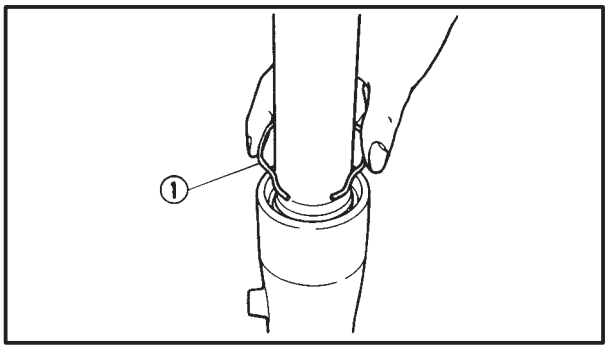

2. Lubricate:
   - inner tube's outer surface

Recommended lubricant
Yamaha fork and shock oil
10 W or equivalent

3. Tighten:
   - damper rod bolt ①

30 Nm (3.0 m·kg, 22 ft·lb)

NOTE:

While holding the damper rod with the T-handle ① and damper rod holder ②, tighten the damper rod bolt ③.

T-handle
YM-01326, 90890-01326
Damper rod holder
YM-1300-1, 90890-01460

4. Install:
   - outer tube bushing ①
   - seal spacer
     (with the fork seal driver weight ② and adapter ③)

Fork seal driver weight
YM-33963, 90890-01367
Adapter
YM-33968, 90890-01381

5. Install:
   - oil seal ①
     (with the fork seal driver weight and adapter)

CAUTION:

Make sure that the numbered side of the oil seal faces up.

NOTE:

- Before installing the oil seal, apply lithium soap base grease onto its lips.

6. Install:
   - oil seal clip ①

NOTE:

Adjust the oil seal clip so that it fits into the outer tube groove.

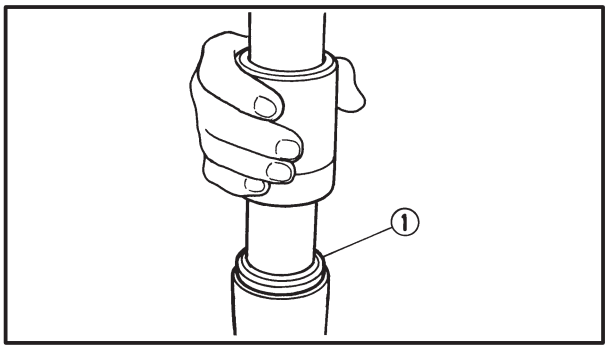

7. Install:
   - dust seal ①
     (with the fork seal driver weight)
8. Fill:
   - front fork leg
     (with the specified amount of the recommended fork oil)

Quantity (each front fork leg)
0.464 L (464 cm³, 16.4 Imp oz, 15.7 US oz)
Recommended oil
Yamaha fork and shock oil 10W or equivalent

CAUTION:

- **Be sure to use the recommended fork oil. Other oils may have an adverse effect on front fork performance.**
- **When disassembling and assembling the front fork leg, do not allow any foreign material to enter the front fork.**

9. After filling the front fork leg, slowly stroke the inner tube up and down (at least ten times) to distribute the fork oil.

NOTE:

Be sure to stroke the inner tube slowly because the fork oil may spurt out.

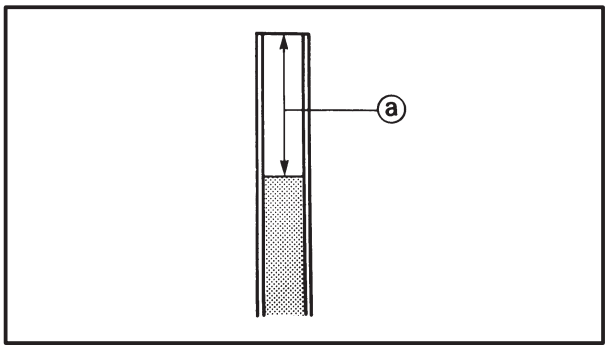

10. Measure:
    - front fork leg oil level ⓐ
      Out of specification → Correct.

Front fork leg oil level (from the top of the inner tube, with the inner tube fully compressed, and without the spring)
108 mm (4.25 in)

NOTE:

Hold the fork in an upright position.

11. Install:
    - fork spring
    - spring seat
    - spacer
    - O-ring
    - cap bolt

NOTE:

- Install the fork spring with its smaller pitch upword.
- Before installing the cap bolt, apply grease to the O-ring.
- Temporarily tighten the cap bolt.

EAS00662

INSTALLING THE FRONT FORK LEGS

The fllowing procedure applies to both of the front fork legs.

1. Install:
   - front fork leg
     Temporarily tighten the upper and lower bracket pinch bolts.

NOTE:

Make sure that the inner fork tube is flush with the top of the upper bracket.

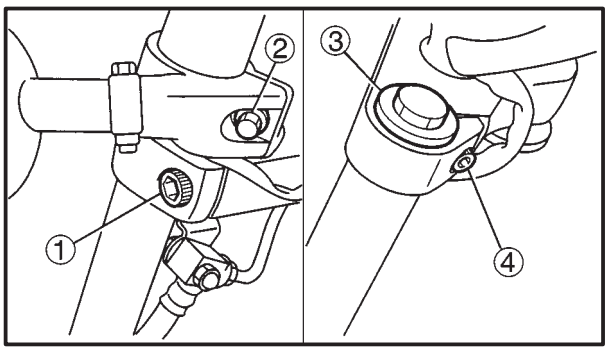

2. Tighten:
   - lower bracket pinch bolt ①
     30 Nm (3.0 m·kg, 22 ft·lb)
   - front turn signal light bolt ②
     7 Nm (0.7 m·kg, 5.1 ft·lb)
   - cap bolt ③ **23 Nm (2.3 m·kg, 17 ft·lb)**
   - upper bracket pinch bolt ④
     20 Nm (2.0m·kg, 14 ft·lb)

WARNING

Make sure that the brake hoses are routed properly.

HANDLEBAR

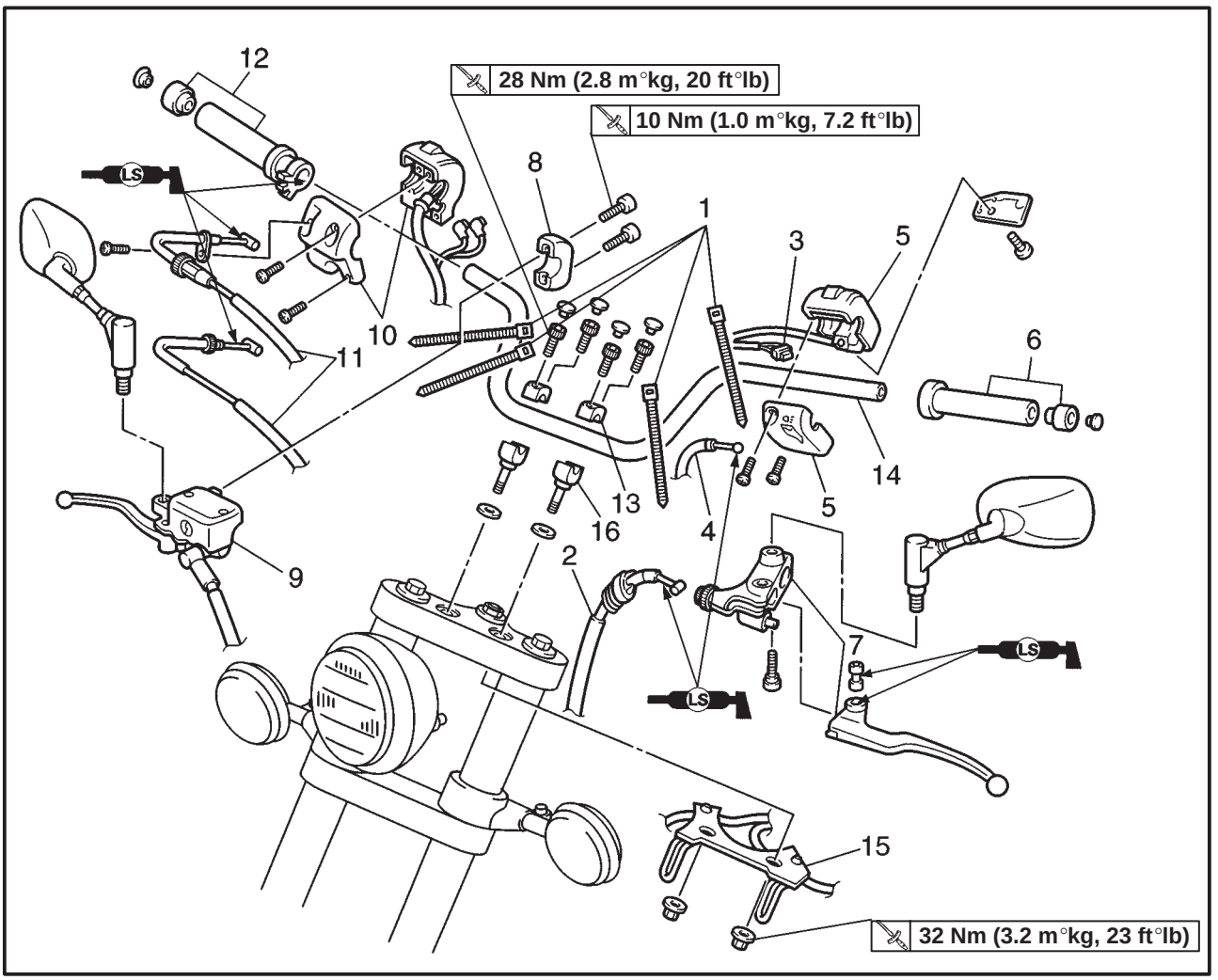

Order	Job name/Part name	Q'ty	Remarks
	Removing the handlebar		Remove the parts in the order listed. Stand the motorcycle on a level surface. **WARNING** **Securely support the motorcycle so that there is no danger of it falling over.**
1	Plastic locking ties	4	
2	Clutch cable	1	
3	Clutch switch lead	1	
4	Starter cable	1	
5	Handlebar switch (left)	1	Refer to "INSTALLING THE HANDLEBAR".
6	Grip (left)	1	Refer to "REMOVING THE HANDLEBAR".
7	Clutch lever assembly	1	Refer to "INSTALLING THE HANDLEBAR".
8	Master cylinder bracket	1	
9	Master cylinder assembly	1	
10	Handlebar switch (right)	1	
11	Throttle cables	2	

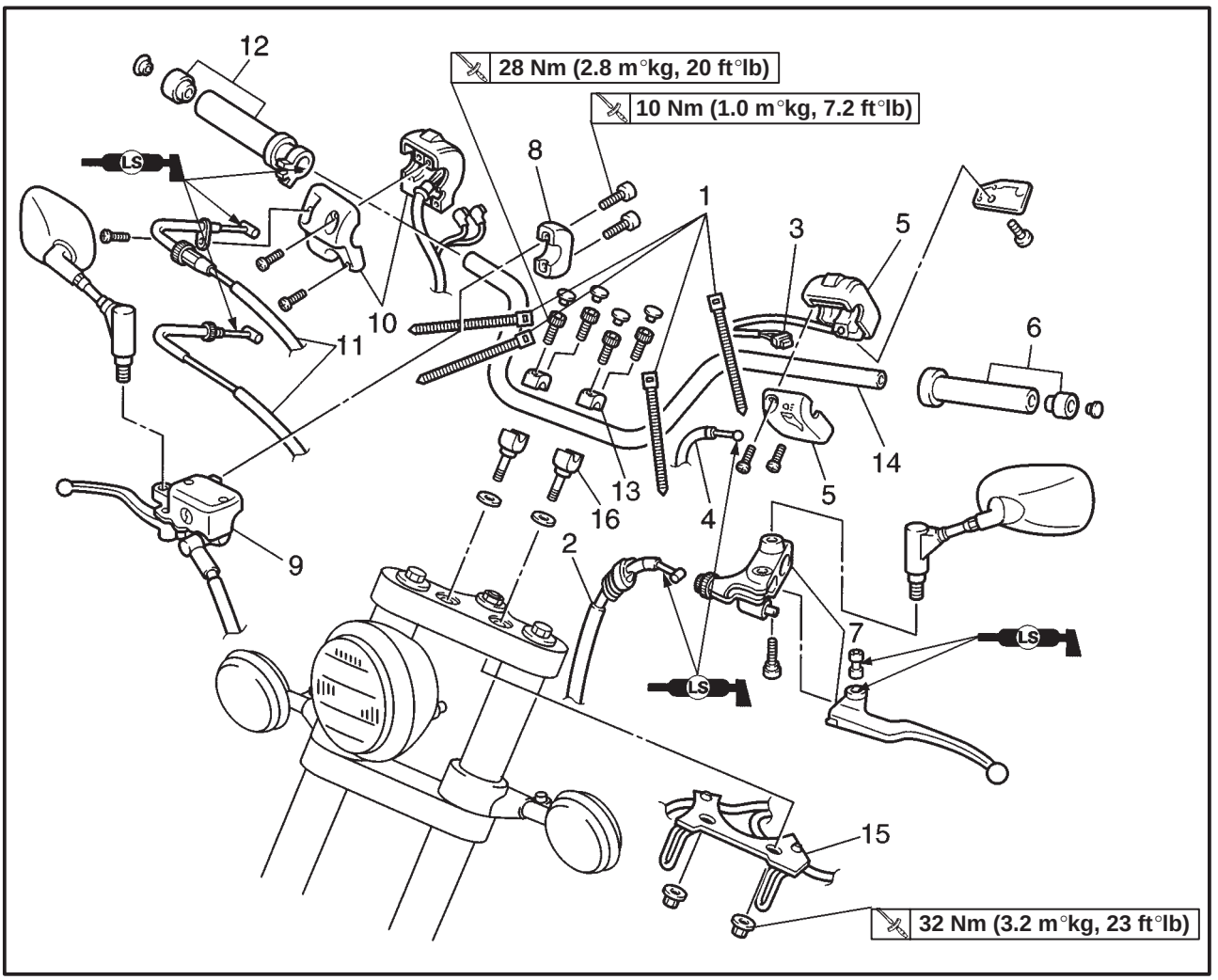

Order	Job name/Part name	Q'ty	Remarks
12	Throttle grip assembly	1	Refer to "INSTALLING THE HANDLEBAR".
13	Handlebar holders (upper)	2	
14	Handlebar	1	
15	Cable guide	1	
16	Handlebar holders (lower)	2	
			For installation, reverse the removal procedure.

EAS00666

REMOVING THE HANDLEBAR

1. Stand the motorcycle on a level surface.

WARNING

Securely support the motorcycle so that there is no danger of it falling over.

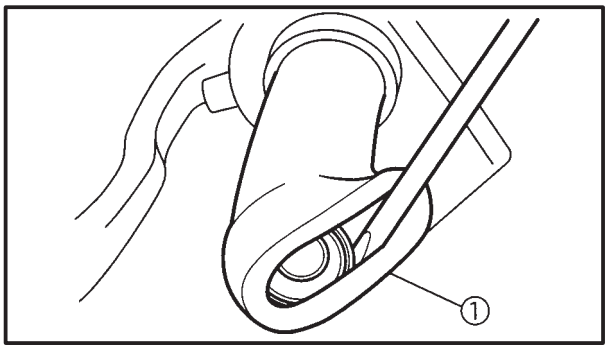

2. Remove:
   - handlebar grip (left) ①

NOTE:

Blow compressed air between the handlebar and the handlebar grip, and gradually push the grip off the handlebar.

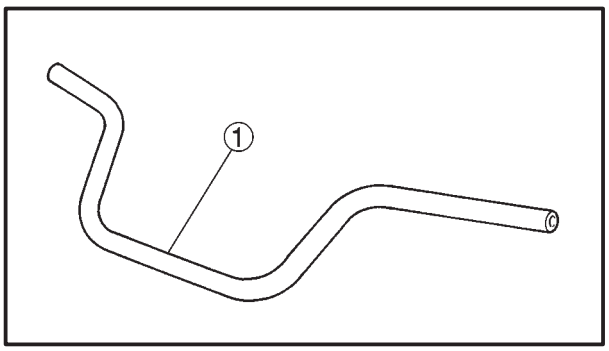

EAS00668

CHECKING THE HANDLEBAR

1. Stand the motorcycle on a level surface.

WARNING

Securely support the motorcycle so that there is no danger of it falling over.

2. Check:
   - handlebar ①
     Bends/cracks/damage → Replace.

WARNING

Do not attempt to straighten a bent handlebar as this may dangerously weaken it.

3. Install:
   - handlebar grip

a. Apply a light coat of rubber adhesive onto the left end of the handlebar.
b. Slide the handlebar grip over the left end of the handlebar.
c. Wipe off any excess rubber adhesive with a clean rag.

WARNING

Do not touch the handlebar grip until the rubber adhesive has fully dried.

EAS00670

INSTALLING THE HANDLEBAR

1. Stand the motorcycle on a level surface.

WARNING

Securely support the motorcycle so that there is no danger of it falling over.

2. Install:
   - handlebar
   - upper handlebar holders

28 Nm (2.8 m°kg, 20 ft°lb)

CAUTION:

- **First, tighten the bolts on the front side of the handlebar holder, then on the rear side.**
- **Turn the handlebar all the way to the left and right. If there is any contact with the fuel tank, adjust the handlebar position.**

NOTE:

- The upper handlebar holders should be installed with the punch mark ⓐ facing forward A.

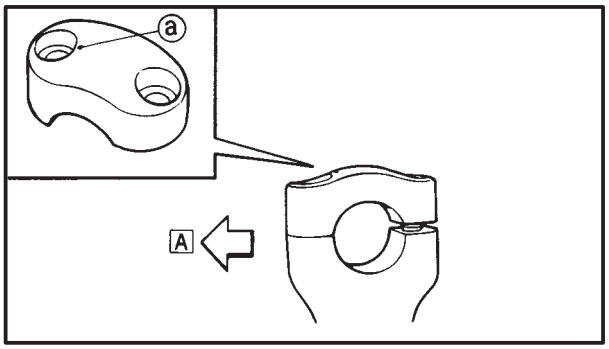

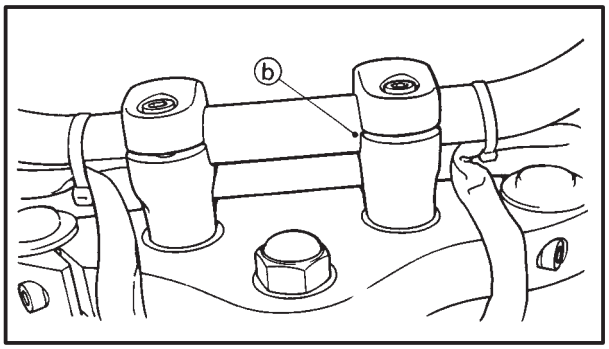

°Align the match marks ⓑ on the handlebar with the upper surface of the lower handlebar holders.

3. Install:
   °throttle grip
   °throttle cable

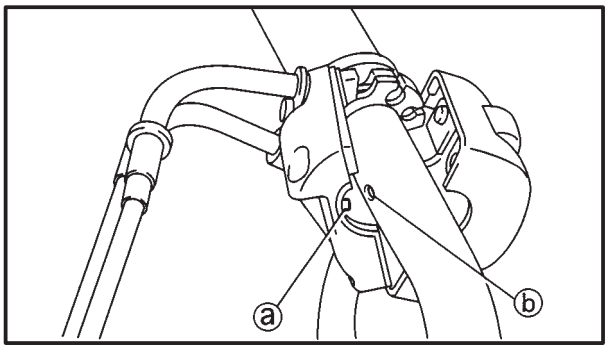

⚠ WARNING

Make sure that the pin ⓐ on the throttle cable housing is aligned with the hole ⓑ in the handlebar.

4. Install:
   °master cylinder
   Refer to “FRONT AND REAR BRAKES”.

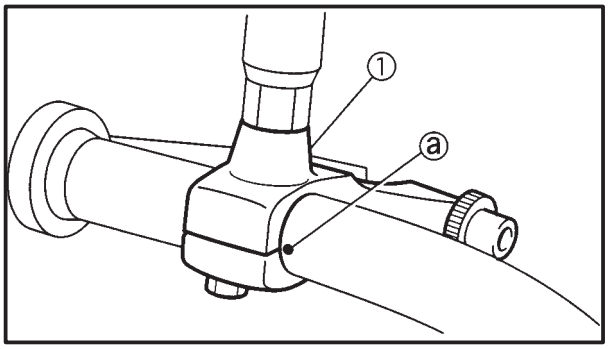

5. Install:
   °clutch lever holder ①

NOTE:

Align the slit in the clutch lever holder with the punch mark ⓐ in the handlebar.

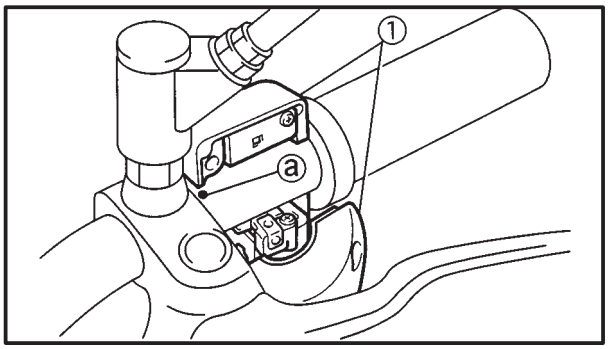

6. Install:
   °left handlebar switch ①

NOTE:

Aligh the matching surface on the handlebar switches with the punch mark ⓐ on the handlebar.

7. Install:
   °clutch cable
8. Connect:
   °clutch switch coupler

NOTE:

Apply a thin coat of lithium soap base grease onto the end of the clutch cable.

9. Adjust:
   - clutch cable free play
     Refer to “ADJUSTING THE CLUTCH CABLE FREE PLAY” in chapter 3.

Clutch cable free play (at the end of the clutch lever)
5 √ 10 mm (0.2 √ 0.39 in)

10. Adjust:
    - throttle cable free play
      Refer to “ADJUSTING THE THROTTLE CABLE FREE PLAY” in chapter 3.

Throttle cable free play (at the flange of the throttle grip)
4 √ 6 mm (0.16 √ 0.24 in)

STEERING HEAD

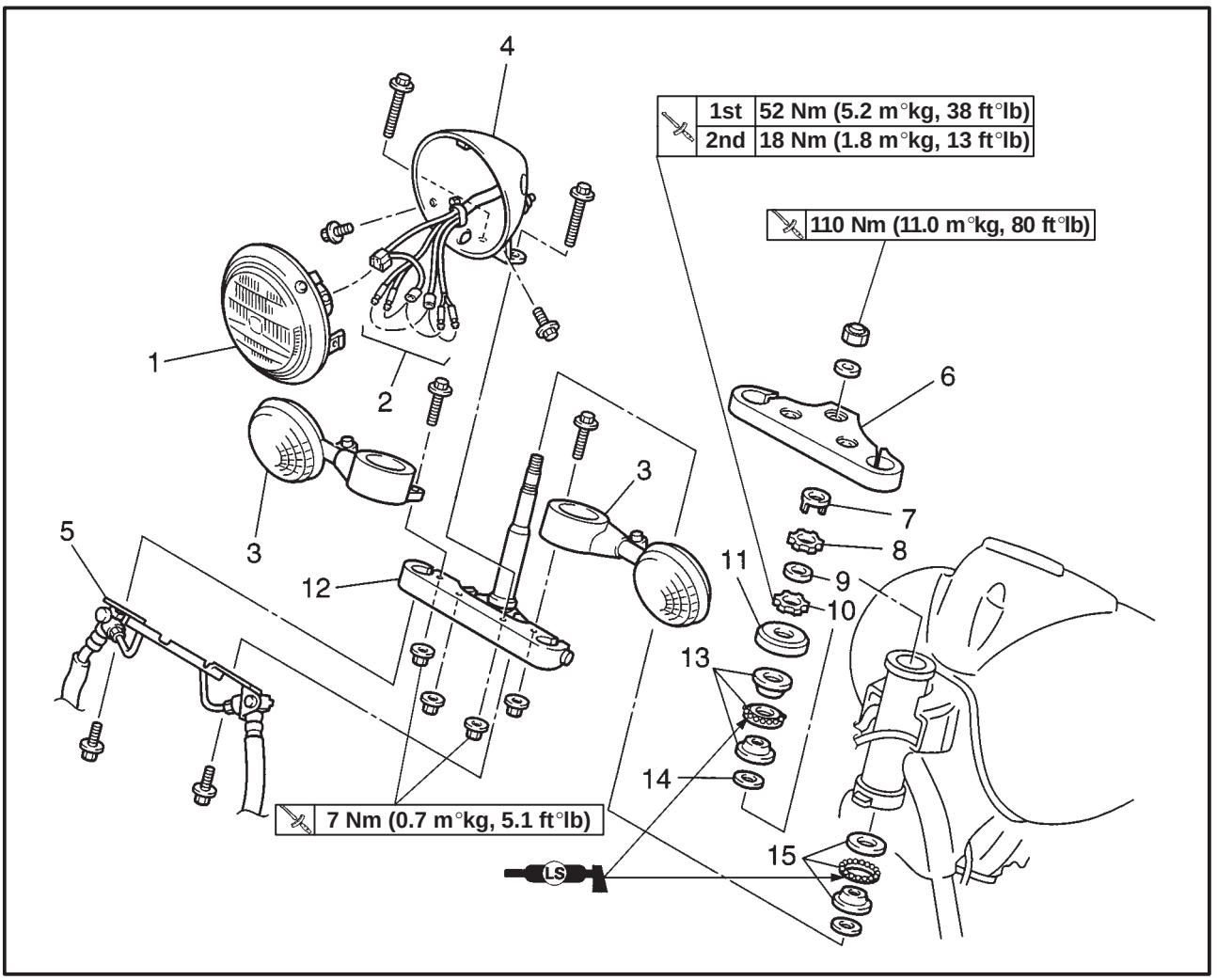

Order	Job name/Part name	Q'ty	Remarks
	Removing the lower bracket		Remove the parts in the order listed. Stand the motorcycle on a level surface. **⚠ WARNING** **Securely support the motorcycle so that there is no danger of it falling over.**
	Front fork legs		Refer to "FRONT FORK".
	Handlebar		Refer to "HANDLEBAR".
1	Headlight lens unit	1	
2	Leads (in the headlight body)	–	Disconnect
3	Front turn signal/position light (left/right)	1/1	
4	Headlight body	1	
5	Brake hose joint holder	1	
6	Upper bracket	1	
7	Lock washer	1	
8	Upper ring nut	1	

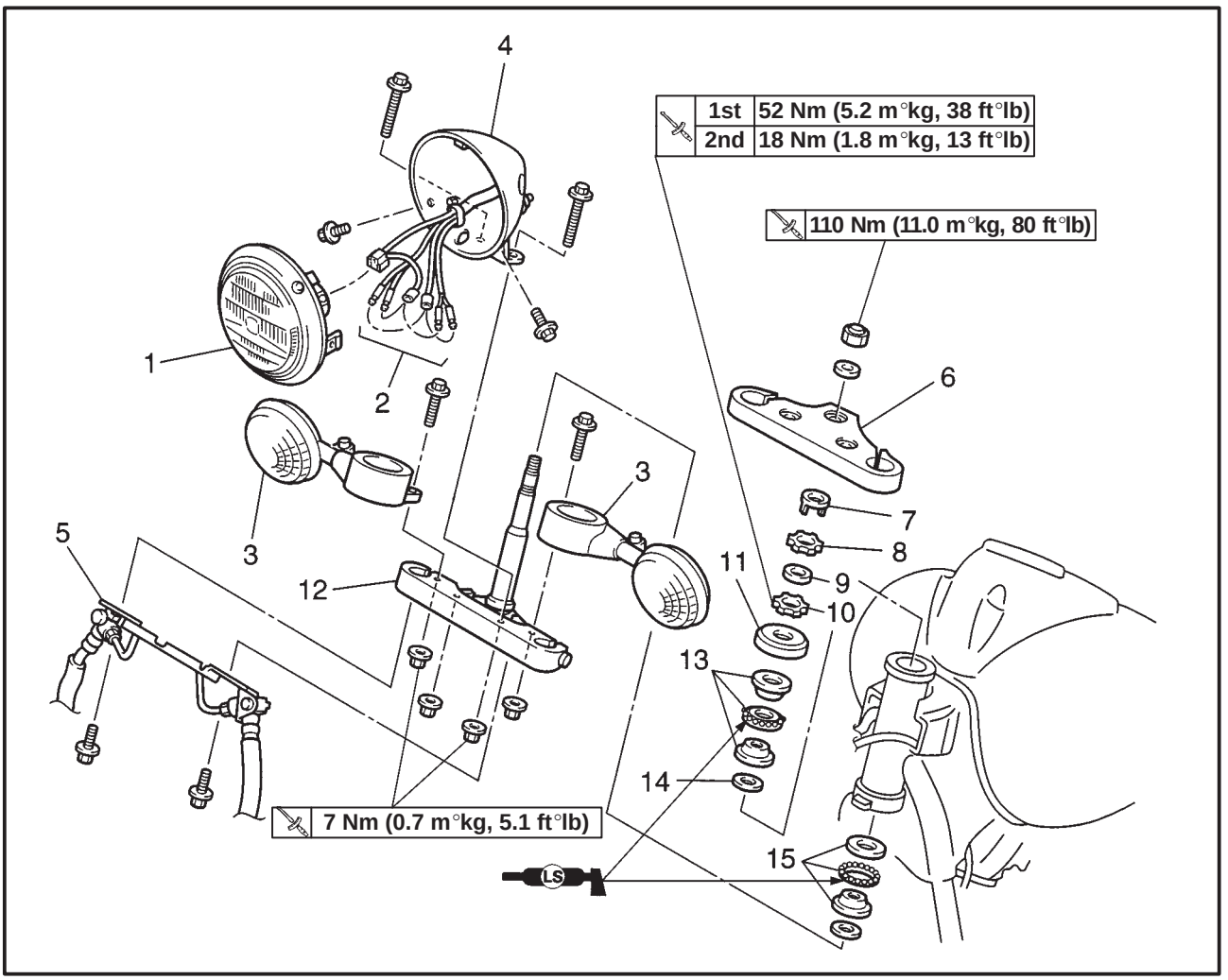

Order	Job name/Part name	Q'ty	Remarks
9	Rubber washer	1	
10	Lower ring nut	1	Refer to "REMOVING THE LOWER BRACKET/INSTALLING THE STEERING HEAD".
11	Bearing cover	1	
12	Lower bracket	1	
13	Bearing (upper)	1	
14	Rubber seal	1	
15	Bearing (lower)	1	
			For installaiton, reverse the removal procedure.

EAS00677

REMOVING THE LOWER BRACKET

1. Stand the motorcycle on a level surface.

WARNING

Securely support the motorcycle so that there is no danger of it falling over.

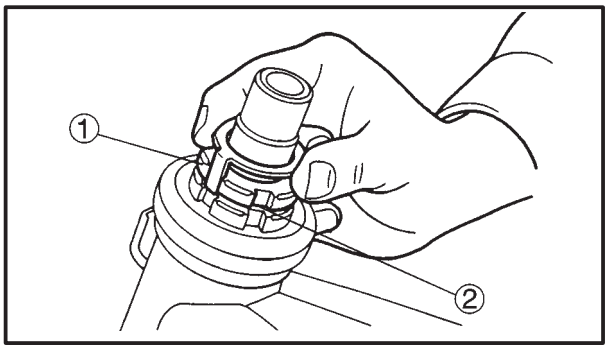

2. Remove:
   - upper ring nut ①
   - lower ring nut ②

NOTE:

Hold the lower ring nut with the exhaust and steering nut wrench, then remove the upper ring nut with the ring nut wrench.

Exhaust and steering nut wrench
YU-01268, 90890-01268
Ring nut wrench
YU-33975, 90890-01403

WARNING

Securely support the lower bracket so that there is no danger of it falling.

EAS00681

CHECKING THE STEERING HEAD

1. Wash:
   - bearings
   - bearing races

Recommended cleaning solvent
Kerosine

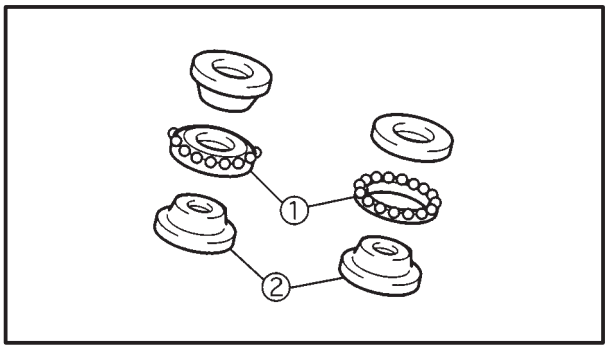

2. Check
   - bearings ①
   - bearing races ②

   Damage/pitting → Replace.
3. Replace:
   - bearings
   - bearing races

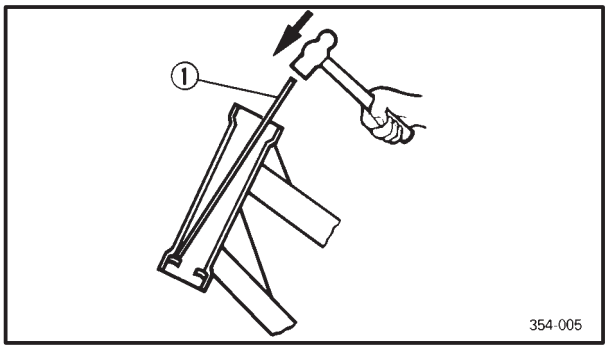

a. Remove the bearing reces from the steering head pipe with a long rod ① and hammer.
b. Remove the bearing race from the lower bracket with a floor chisel ② and hammer.
c. Install a new rubber seal and new bearing reces.

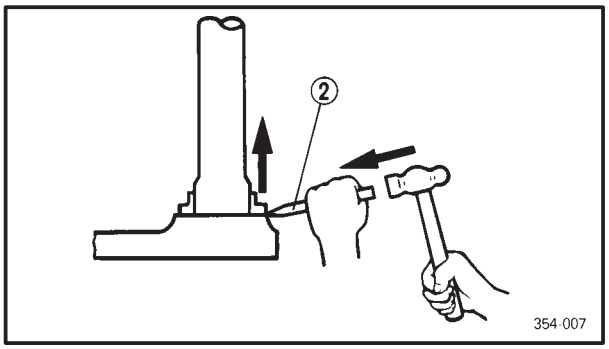

CAUTION:

If the bearing race is not installed properly, the steering head pipe could be damaged.

NOTE:

- Always replace the bearings and bearing races as a set.
- Whenever the steering head is disassembled, replace the rubber seal.

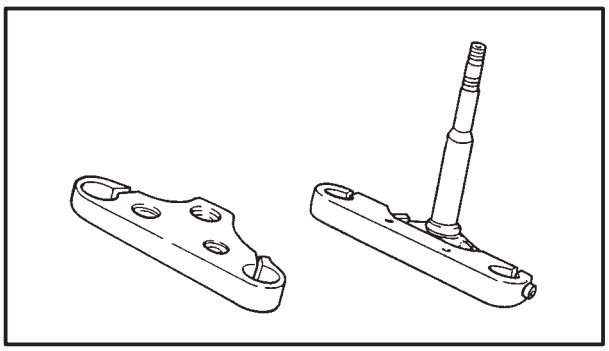

4. Check:
   - upper bracket
   - lower bracket
     (along with the steering stem)
     Bends/cracks/damage → Replace.

EAS00683

INSTALLING THE STEERING HEAD

1. Lubricate:
   - upper bearing
   - lower bearing
   - bearing races

	Recommended lubricant **Lithium soap base grease**

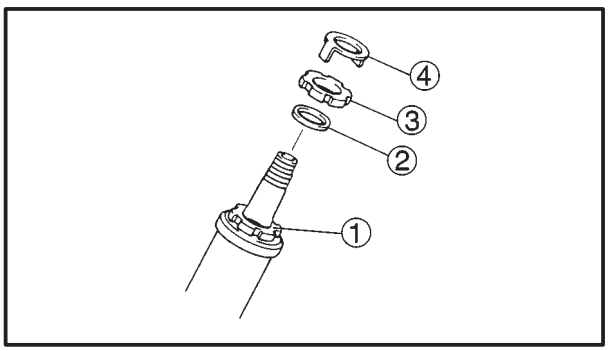

2. Install:
   - Lower ring nut ①
   - rubber washer ②
   - upper ring nut ③
   - lock washer ④
     Refer to “CHECKING AND ADJUSTING THE STEERING HEAD” in chapter 3.
3. Install:
   - upper bracket
   - steering stem nut

NOTE:

Temporarily tighten the steering stem nut.

4. Install:
   - front fork legs
     Refer to “FRONT FORK”

NOTE:

Temporarily tighten the upper and lower bracket pinch bolts.

REAR SHOCK ABSORBER AND SWINGARM

RIGHT SIDE COVER AND BATTERY BOX

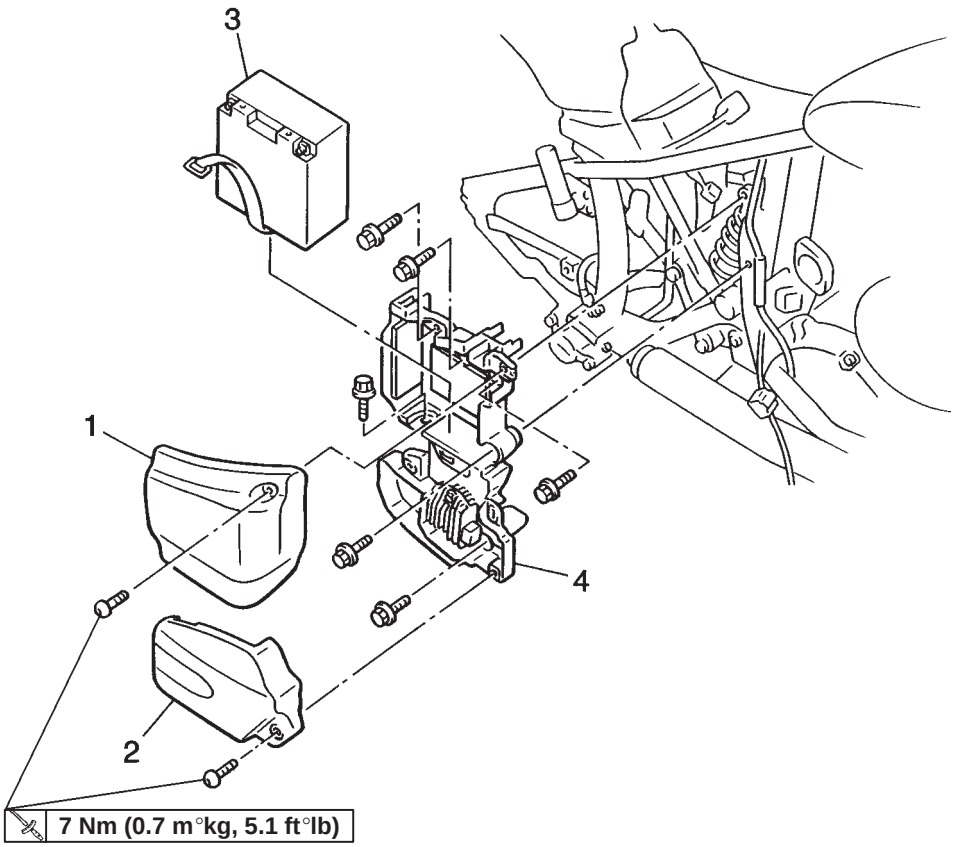

Order	Job name/Part name	Q'ty	Remarks
	Removing the right side cover and battery box.		Remove the parts in the order listed. Stand the motorcycle on a level surface.
	Seats		Refer to "FUEL TANK AND SEATS" in CHAPTER 3.
	Muffler assembly		Refer to "REAR WHEEL AND BRAKE DISC".
1	Battery cover	1	
2	Right side cover	1	
3	Battery	1	Refer to "REMOVING/INSTALLING THE REAR SHOCK ABSORBER ASSEMBLY".
4	Battery box	1	
			For installation, reverse the removal procedure.

LEFT SIDE COVER AND TOOL BOX

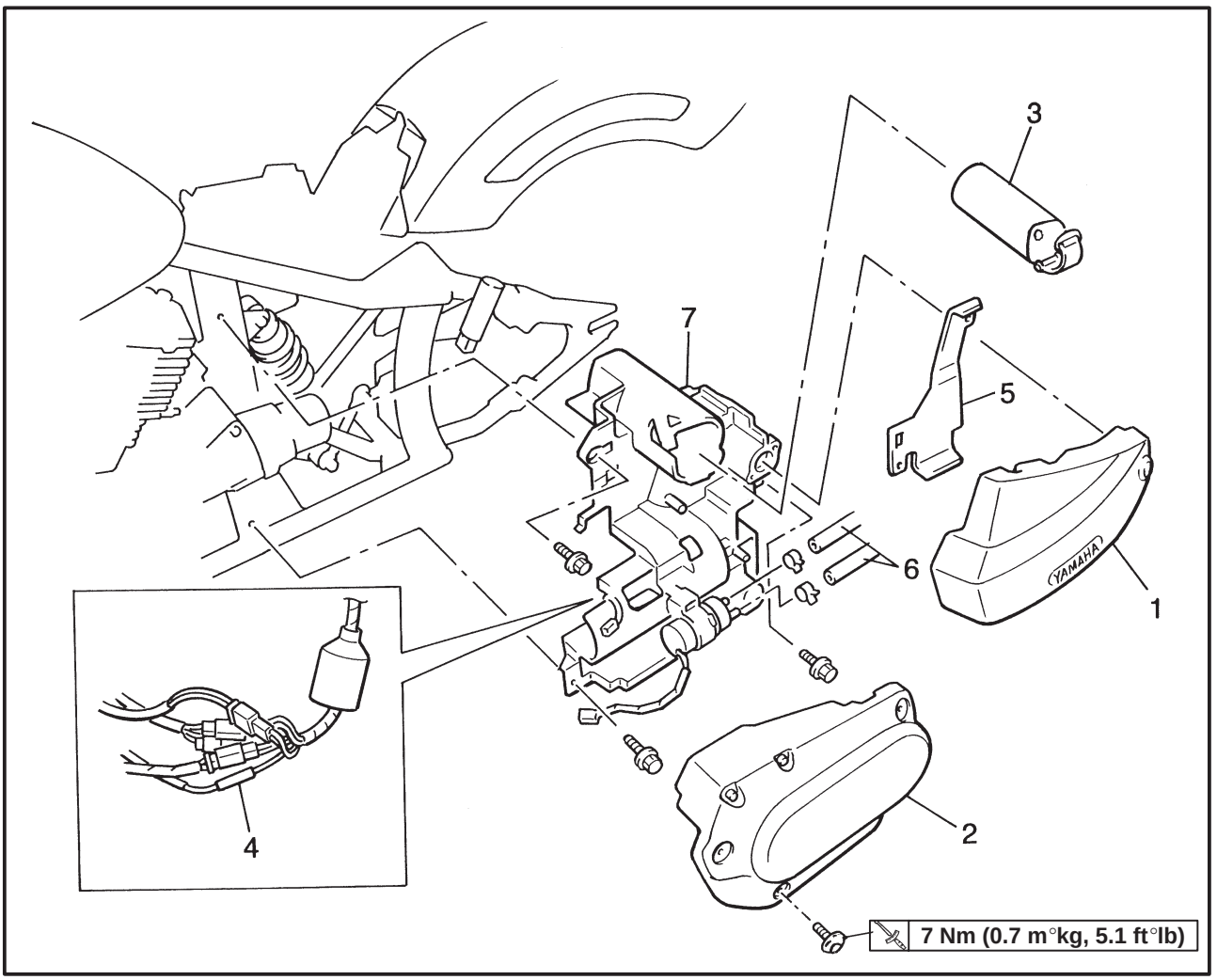

Order	Job name/Part name	Q'ty	Remarks
	Removing the left side cover and tool box		Remove the parts in order listed.
1	Tool box cover	1	
2	Left side cover	1	
3	Owner's tool kit	1	
4	Connector's	–	Disconnect
5	Fuel hose holder	1	
6	Fuel hoses	2	Disconnect
7	Tool box	1	
			For installation, reverse the removal procedure.

REAR SHOCK ABSORBER AND SWINGARM

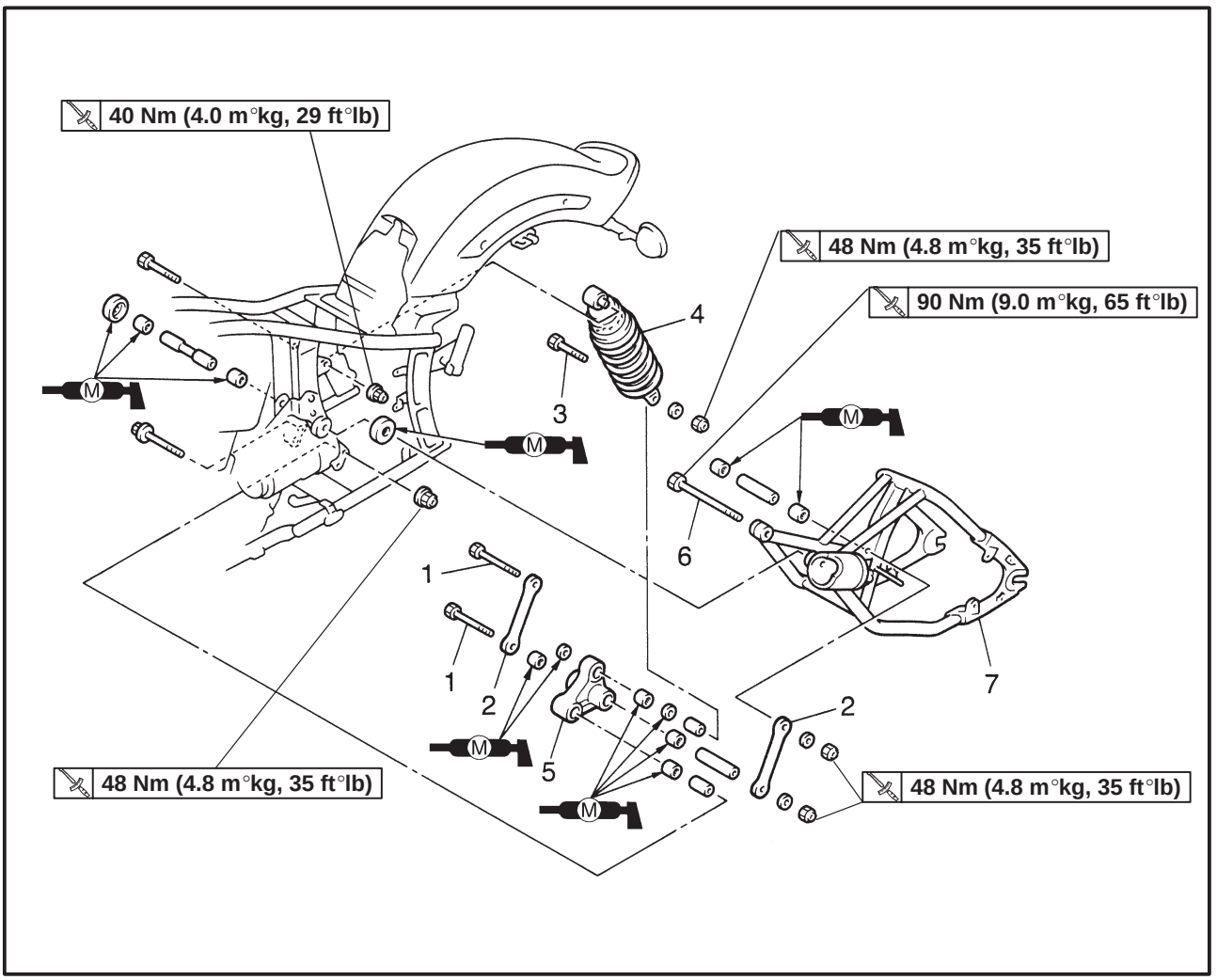

Order	Job name/Part name	Q'ty	Remarks
	Removing the rear shock absorber and swingarm		Remove the parts in order listed.
	Rear wheel		Refer to "REAR WHEEL AND BRAKE DISC".
1	Connecting arm bolts	2	Refer to "REMOVING/INSTALLING THE REAR SHOCK ABSORBER ASSEMBLY".
2	Connecting arms	2	
3	Rear shock absorber lower bolt	1	
4	Rear shock absorber	1	
5	Relay arm	1	Refer to "REMOVING/INSTALLING THE SWINGARM".
6	Pivot shaft	1	
7	Swingarm	1	
			For installation, reverse the removal procedure.

EAS00687

HANDLING THE REAR SHOCK ABSORBER AND GAS CYLINDER

WARNING

This rear shock absorber and gas cylinder contain highly compressed nitrogen gas. Before handling the rear shock absorber or gas cylinder, read and make sure you understand the following information. The manufacturer cannot be held responsible for property damage or personal injury that may result from improper handling of the rear shock absorber and gas cylinder.

- **Do not tamper or attempt to open the rear shock absorber or gas cylinder.**
- **Do not subject the rear shock absorber or gas cylinder to an open flame or any other source of high heat. High heat can cause an explosion due to excessive gas pressure.**
- **Do not deform or damage the rear shock absorber or gas cylinder in any way. If the rear shock absorber, gas cylinder or both are damaged, damping performance will suffer.**

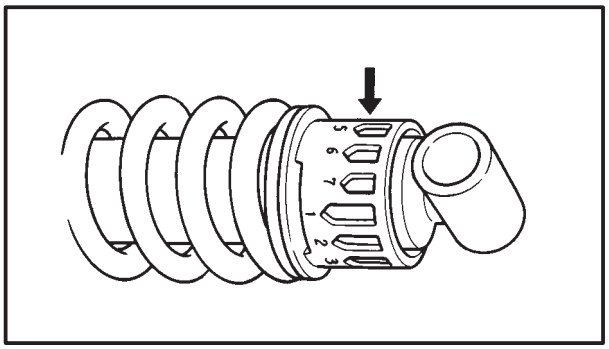

EAS00689

DISPOSING OF A REAR SHOCK ABSORBER AND GAS CYLINDER

a. Gas pressure must be released before disposing of a rear shock absorber and gas cylinder.To release the gas pressure, drill a 2 √ 3 mm (0.08 √ 0.12 in) hole through the gas cylinder at a point 15 √ 20 mm (0.59 √ 0.79 in) from its end as shown.

WARNING

Wear eye protection to prevent eye damage from released gas or metal chips.

EAS00694

REMOVING THE REAR SHOCK ABSORBER

1. Stand the motorcycle on a level surface.

WARNING

Securely support the motorcycle so that there is no danger of it falling over.

NOTE:

Place the motorcycle on a suitable stand so that the rear wheel is elevated.

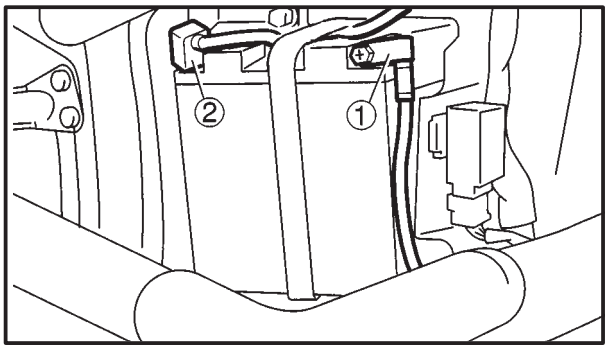

2. Disconnect:
   - battery leads
     (from the battery terminals)

CAUTION:

First, disconnect the negative lead ①, then the positive lead ②.

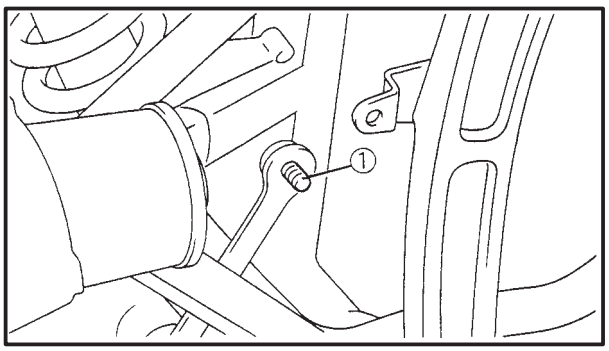

3. Remove:
   - connecting arm bolt(swingarm side) ①
   - rear shock absorber assembly lower bolt

NOTE:

While removing the connecting arm bolt (swingarm side), hold the swingarm so that it does not drop down.

4. Remove:
   - rear shock absorber upper bolt
   - rear shock absorber

EAS00702

REMOVING THE SWINGARM

1. Stand the motorcycle on a level surface.

WARNING

Securely support the motorcycle so that there is no danger of it falling over.

NOTE:

Place the motorcycle on a suitable stand so that the rear wheel is elevated.

2. Remove:
   - rear shock absorber

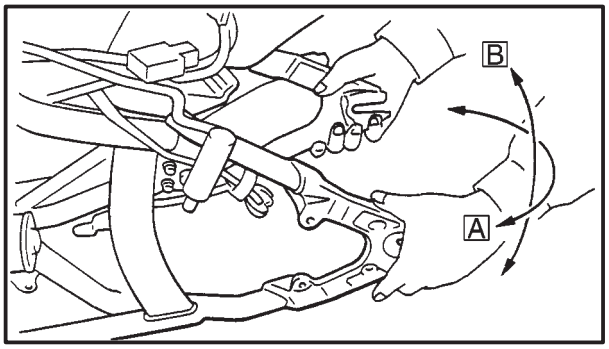

3. Check:
   - swingarm side play
   - swingarm vertical movement

▼▼▼▼▼▼▼▼▼▼▼▼▼▼▼▼▼▼▼▼▼▼▼▼▼▼▼▼▼▼▼▼

a. Check the tightening torque of the swingarm pivot bolts and locknut.

	Locknut **90 Nm (9.0 m·kg, 65 ft·lb)**

b. Check the swingarm side play A by moving the swingarm from side to side.

c. If the swingarm side play is out of specification, check the spacers and bearings.

	Swingarm side play (at the end of the swingarm) **0 mm (0 in)**

d. Check the swingarm vertical movement B by moving the swingarm up and down.
   If swingarm vertical movement is not smooth or if there is binding, check the spacers and bearings.

▲▲▲▲▲▲▲▲▲▲▲▲▲▲▲▲▲▲▲▲▲▲▲▲▲▲▲▲▲▲▲▲

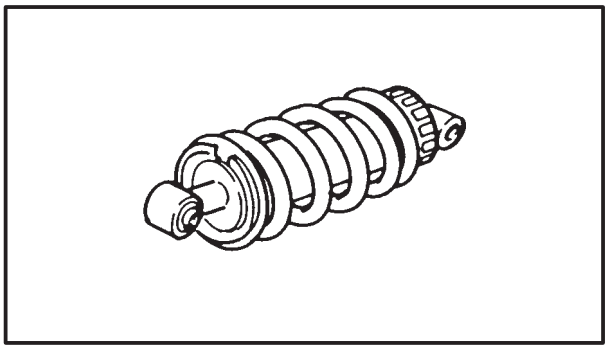

EAS00696

CHECKING THE REAR SHOCK ABSORBER AND GAS CYLINDER

1. Check:
   - rear shock absorber rod
     Bends/damage → Replace the rear shock absorber assembly.
   - rear shock absorber
     Gas leaks/oil leaks → Replace the rear shock absorber assembly.
   - spring
     Damage/wear → Replace the rear shock absorber assembly.
   - gas cylinder
     Damage/gas leaks → Replace.
   - bushings
     Damage/wear → Replace.
   - dust seals
     Damage/wear → Replace.
   - bolts
     Bends/damage/wear → Replace.

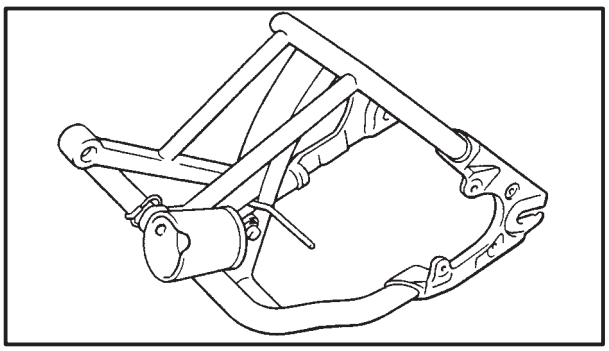

EAS00708

CHECKING THE SWINGARM

1. Check:
   - swingarm
     Bends/cracks/damage → Replace.

2. Check:
   - pivot shaft
     Damage/wear → Replace.

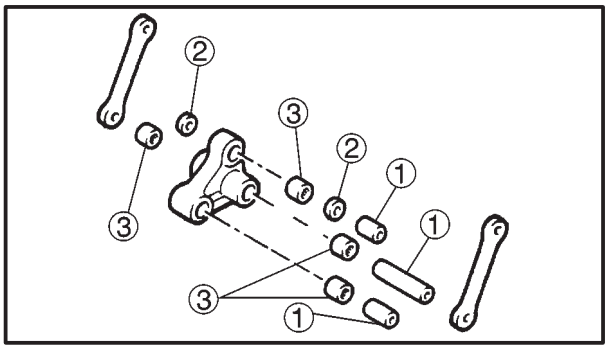

3. Check:
   - collars ①
   - oilseals ②
   - bearings ③
     Damage/wear → Replace.

EAS00698

INSTALLING THE REAR SHOCK ABSORBER

1. Install:
   - swingarm
     Refer to “INSTALLING THE SWINGARM”.
2. Lubricate:
   - spacers
   - bearings

	Recommended lubricant **Molybdenum disulfide grease**

3. Install:
   - rear shock absorber assembly

	Rear shock absorber assembly upper nut **40 Nm (4.0 m°kg, 29 ft°lb)** **Rear shock absorber assembly lower nut** **48 Nm (4.8 m°kg, 35 ft°lb)** **Relay-arm-to-frame-nut** **48 Nm (4.8 m°kg, 35 ft°lb)**

NOTE:

- When installing the rear shock absorber assembly, lift up the swingarm.
- Install the connecting arm front bolt from the right.

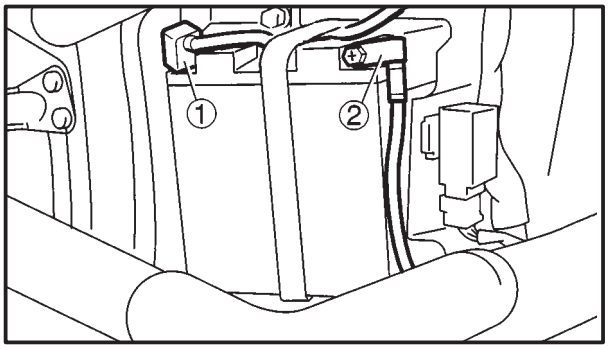

4. Connect:
   - battery leads
     (to the battery terminals)

CAUTION:

First, connect the positive lead ①, then the negative lead ②.

EAS00712

INSTALLING THE SWINGARM

1. Lubricate:
   - bearings
   - spacers
   - oil seals

	Recommended lubricant **Molybdenum disulfide grease**

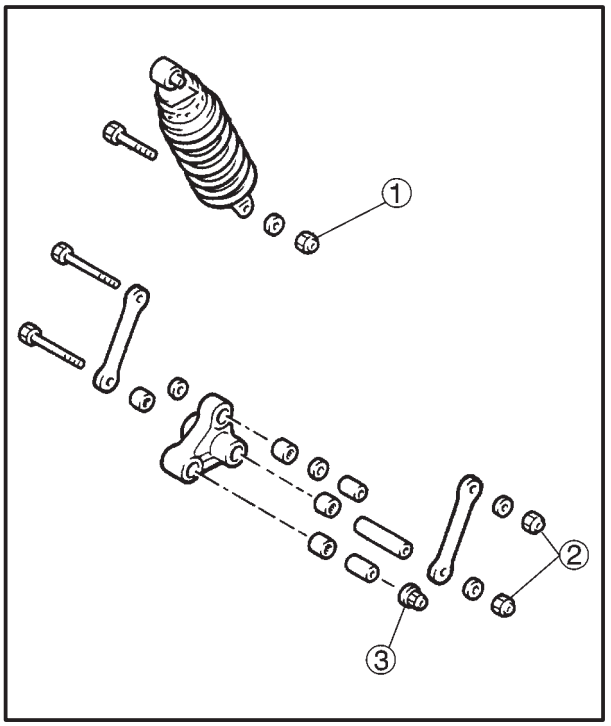

2. Install:
   - relay arm
   - left connecting arm
   - right connecting arm

Rear-shock-absorber-assembly lower nut ①
48 Nm (4.8 m°kg, 35 ft°lb)
Connecting arm nuts ②
48 Nm (4.8 m°kg, 35 ft°lb)
Relay-arm-to-frame-nut ③
48 Nm (4.8 m°kg, 35 ft°lb)

3. Install:
   - rear shock absorber
     Reter to “INSTALLING THE REAR SHOCK ABSORBER ASSEMBLY”.
4. Install:
   - rear wheel
     Refer to “REAR WHEEL AND BRAKE DISC”.

SHAFT DRIVE

EAS00715

TROUBLESHOOTING

The following conditions may indicate damaged shaft drive components:

A	Symptoms	B	Possible causes
1.	A pronounced hesitation or jerky movement during acceleration, deceleration, or sustained speeds. (not to be confused with engine surging or transmissionrelated movements.)	A.	Bearing damage
2.	A rolling “rumble” noticeable at low speeds, a high-pitched whine, or a “clunk” from a shaft drive component or vicinity of the shaft drive.	B.	Improper gear lash
3.	The shaft drive is locked up or no power is transmitted from the engine to the rear wheel	C.	Damaged gear teeth
		D.	Broken drive shaft
		E.	Broken gear teeth
		F.	Seizure due to lack of lubrication
		G.	Small foreign objects lodged between moving parts

NOTE:

Causes A, B and C may be extremely difficult to diagnose. The symptoms are quite subtle and difficult to distinguish from normal operating noises. If there is reason to believe these components are damaged, remove them for individual inspection.

Inspection notes

1. Investigate any unusual noises.

▼▼▼▼▼▼▼▼▼▼▼▼▼▼▼▼▼▼▼▼▼▼▼▼▼▼▼▼▼▼▼▼▼▼

The following noises may indicate a mechanical defect:

a. A rolling “rumble” during coasting, acceleration, or deceleration, (increases with the rear wheel speed, but does not increase with higher engine or transmission speeds).
   Diagnosis: Possible wheel bearing damage.
b. A whining noise that varies with acceleration and deceleration.
   Diagnosis: Possible incorrect reassembly or too little gear lash.

⚠ WARNING

Insufficient gear lash is extremely destructive to the gear teeth. If a test ride, following reassembly, indicates these symptoms, stop riding immediately to minimize gear damage.

c. A slight “clunk” evident at low speed operation. (not to be confused with normal motorcycle operation)
   Diagnosis: Possible broken gear teeth

⚠ WARNING

Stop riding immediately if broken gear teeth are suspected. This condition could result in the shaft drive assembly locking up, causing a loss of control and possible injury to the rider.

▲▲▲▲▲▲▲▲▲▲▲▲▲▲▲▲▲▲▲▲▲▲▲▲▲▲▲▲▲▲▲▲▲▲

EAS00716

Troubleshooting chart

When causes A and B shown in the chart at the beginning of the “TROUBLESHOOTING” section exist, check the following points:

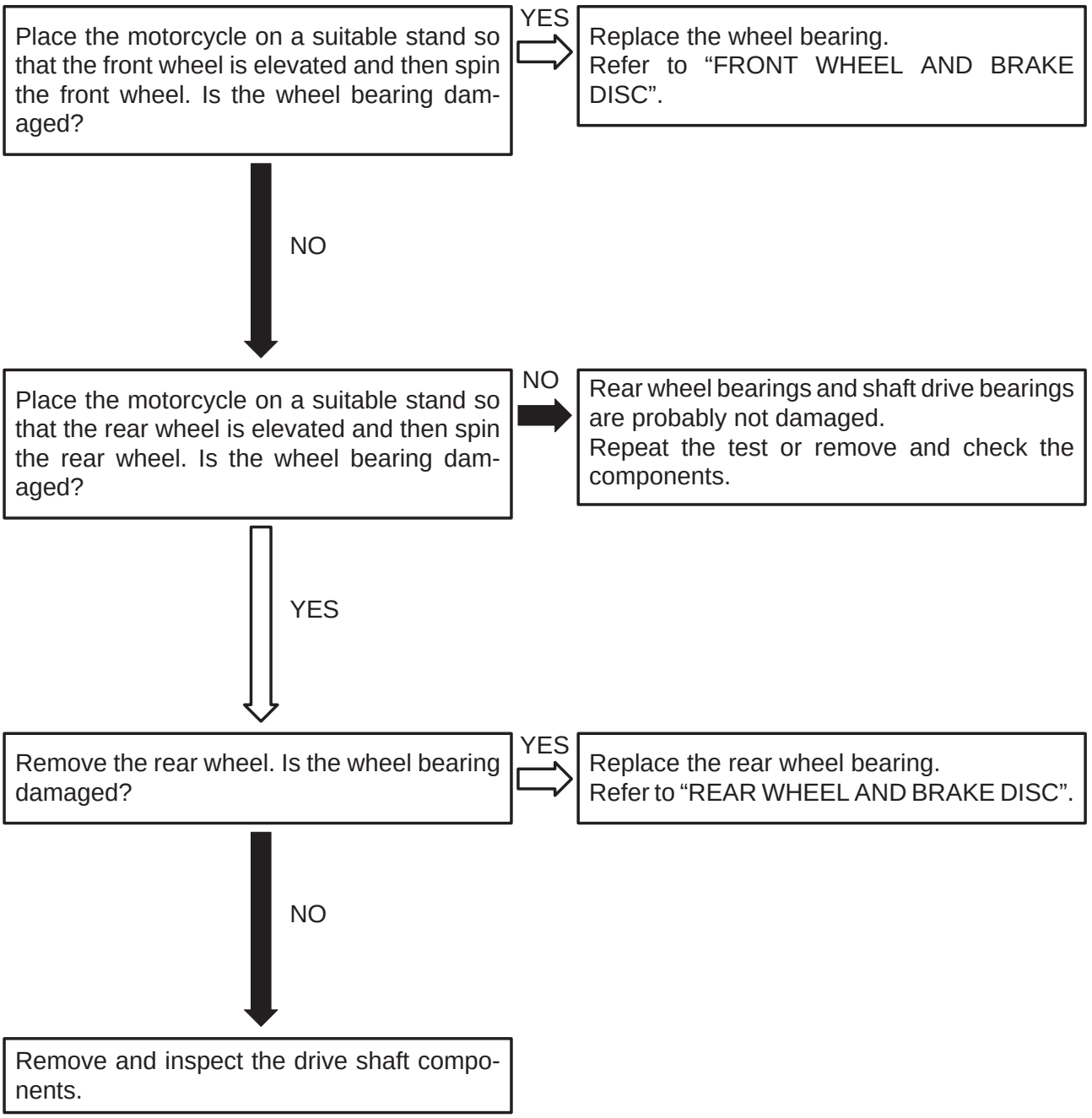

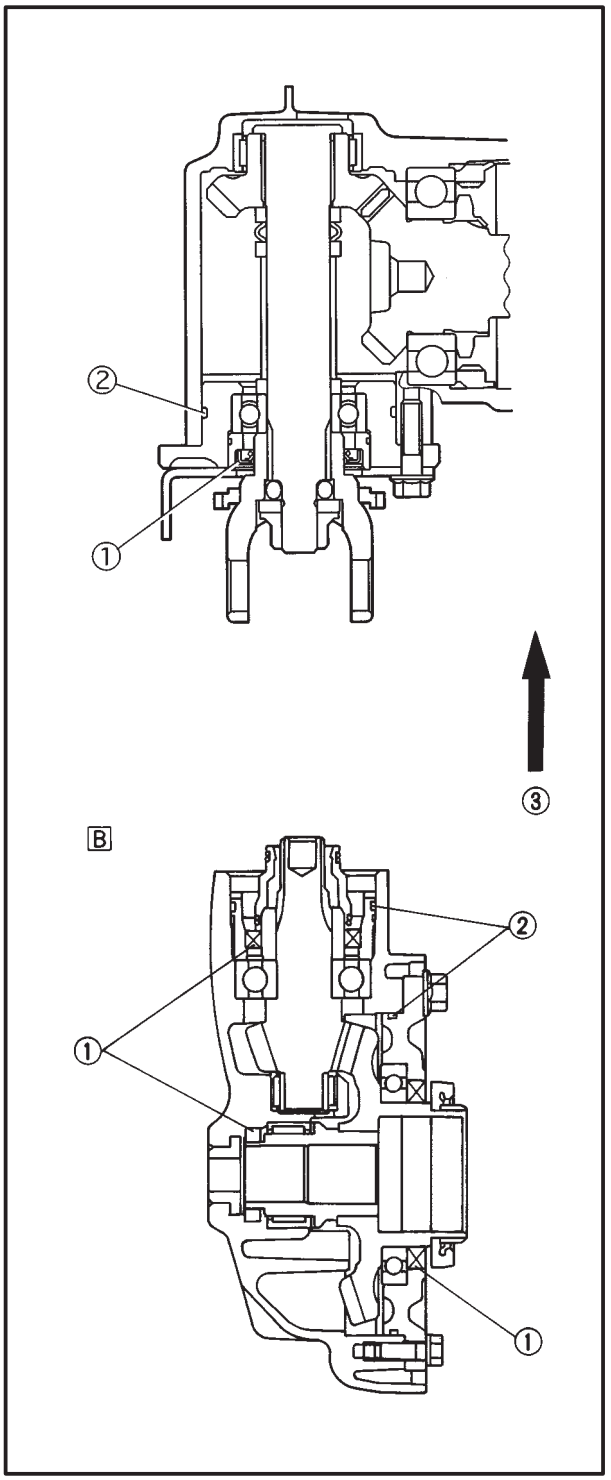

EAS00717

CHECKING THE FINAL DRIVE OIL FOR CONTAMINATION AND INSPECTING THE SHAFT DRIVE FOR LEAKS

1. Drain:
   - final drive oil
     (from the final drive housing)
     Refer to “CHARGING THE FINAL DRIVE OIL” in chapter 3.
2. Check:
   - final drive oil
     Large amount of metal particles → Check for bearing seizure.

NOTE:

A small amount of metal particles in the final drive oil is normal.

3. Check:
   - shaft drive housing
     (for oil leaks)

▼▼▼▼▼▼▼▼▼▼▼▼▼▼▼▼▼▼▼▼▼▼▼▼▼▼▼▼▼▼▼▼

a. Thoroughly clean the entire motorcycle and then completely dry it.
b. Apply a leak-locating compound or dry powder spray to the shaft drive.
c. Test ride the motorcycle long enough to locate a leak.
   Oil leak → Repair or replace the faulty part(-s).

① Oil seal
② O-ring
③ Forward

NOTE:

- What may appear to be an oil leak on a new or fairly new motorcycle, may result from the application of a rust preventive coating or excessive seal lubrication.
- Always clean the motorcycle and recheck the area where the leak is thought to originate from.

▲▲▲▲▲▲▲▲▲▲▲▲▲▲▲▲▲▲▲▲▲▲▲▲▲▲▲▲▲▲▲▲

EAS00719

MEASURING THE RING GEAR BACKLASH

1. Secure the final drive assembly in a vise.
2. Remove:
   - final drive oil drain bolt
3. Drain:
   - final drive oil
     (from the final drive assembly)

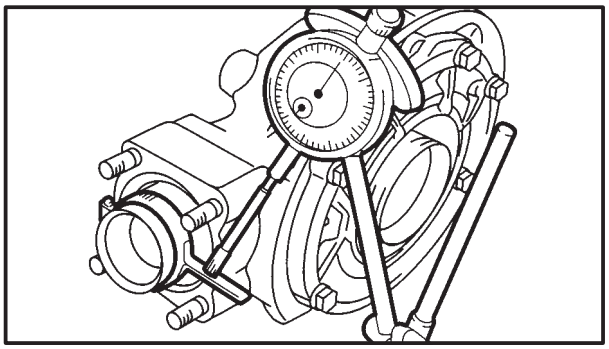

4. Measure:
   - ring gear backlash
     Out of specification → Adjust.

	Ring gear backlash **0.1 √ 0.2 mm (0.004 √ 0.008 in)**

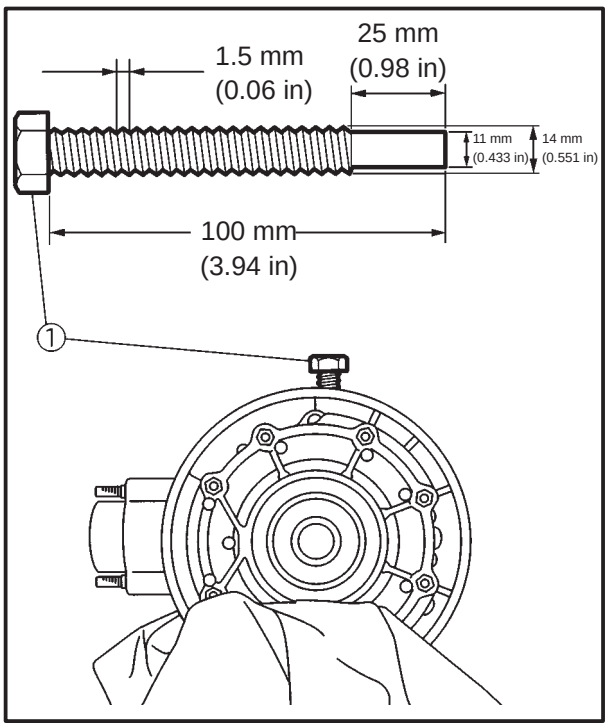

a. Install a bolt ① of the specified size, into the final drive oil filler hole.
b. Finger tighten the bolt until it stops the ring gear from moving.

NOTE:

Do not overtighten the bolt.

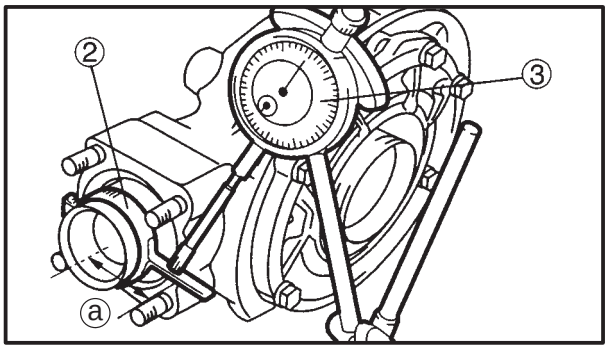

c. Install the final gear backlash band ② and dial gauge ③

	Final gear backlash band **YM-01230, 90890-01230**

ⓐ Dial-gauge-plunger contact point: 54.5 mm (2.1 in)

d. Gently rotate the gear coupling from engagement to engagement.
e. Record the reading on the dial gauge.
f. Remove the dial gauge, special tool, and bolt.

g. Rotate the final drive pinion gear 90°.
h. Reinstall the bolt, special tool, and dial gauge.
i. Repeat steps (d) to (h) three more times (for a total of four measurements).
j. If any of the readings are over specification, adjust the ring gear backlash.

▲▲▲▲▲▲▲▲▲▲▲▲▲▲▲▲▲▲▲▲▲▲▲▲▲▲▲▲▲▲▲▲

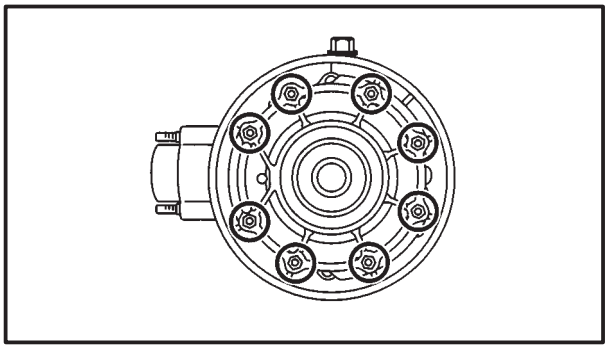

EAS00720

ADJUSTING THE RING GEAR BACKLASH

1. Remove:
   - ring gear bearing housing nuts
   - ring gear bearing housing bolts

NOTE:

Working in a crisscross pattern, loosen each nut 1/4 of a turn. After all of the nuts are fully loosened, remove them and the bolts.

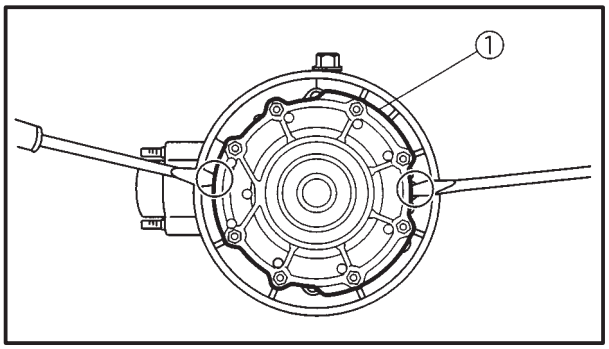

2. Remove:
   - ring gear bearing housing ①
   - ring gear ②
   - thrust washer ③
   - ring gear shim(-s) ④
3. Adjust:
   - ring gear backlash

▼▼▼▼▼▼▼▼▼▼▼▼▼▼▼▼▼▼▼▼▼▼▼▼▼▼▼▼▼▼▼▼

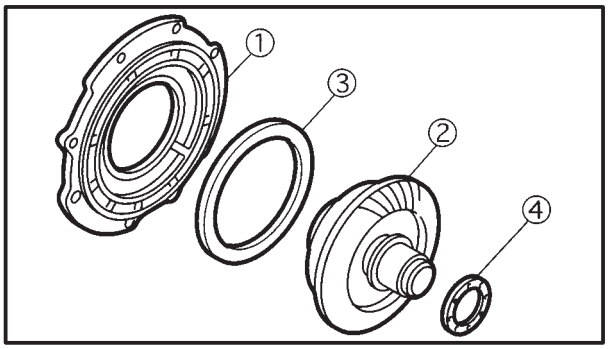

a. Use the following chart to select the suitable shim(-s) and thrust washer.

Thinner shim	**Ring gear backlash is increased.**
Thicker shim	**Ring gear backlash is decreased.**

b. If it is necessary to increase the ring gear backlash by more than 0.2 mm, reduce the thrust washer thickness by 0.2 mm for every 0.2 mm increase of ring gear shim thickness.
c. If it is necessary to reduce the ring gear backlash by more than 0.2 mm, increase the thrust washer thickness by 0.2 mm for every 0.2 mm decrease of ring gear shim thickness.

Rig gear shims	
Thickness (mm)	**0.25, 0.30, 0.40**

Thrust washers	
Thickness (mm)	**1.2, 1.4, 1.6, 1.8, 2.0**

FINAL DRIVE ASSEMBLY AND DRIVE SHAFT

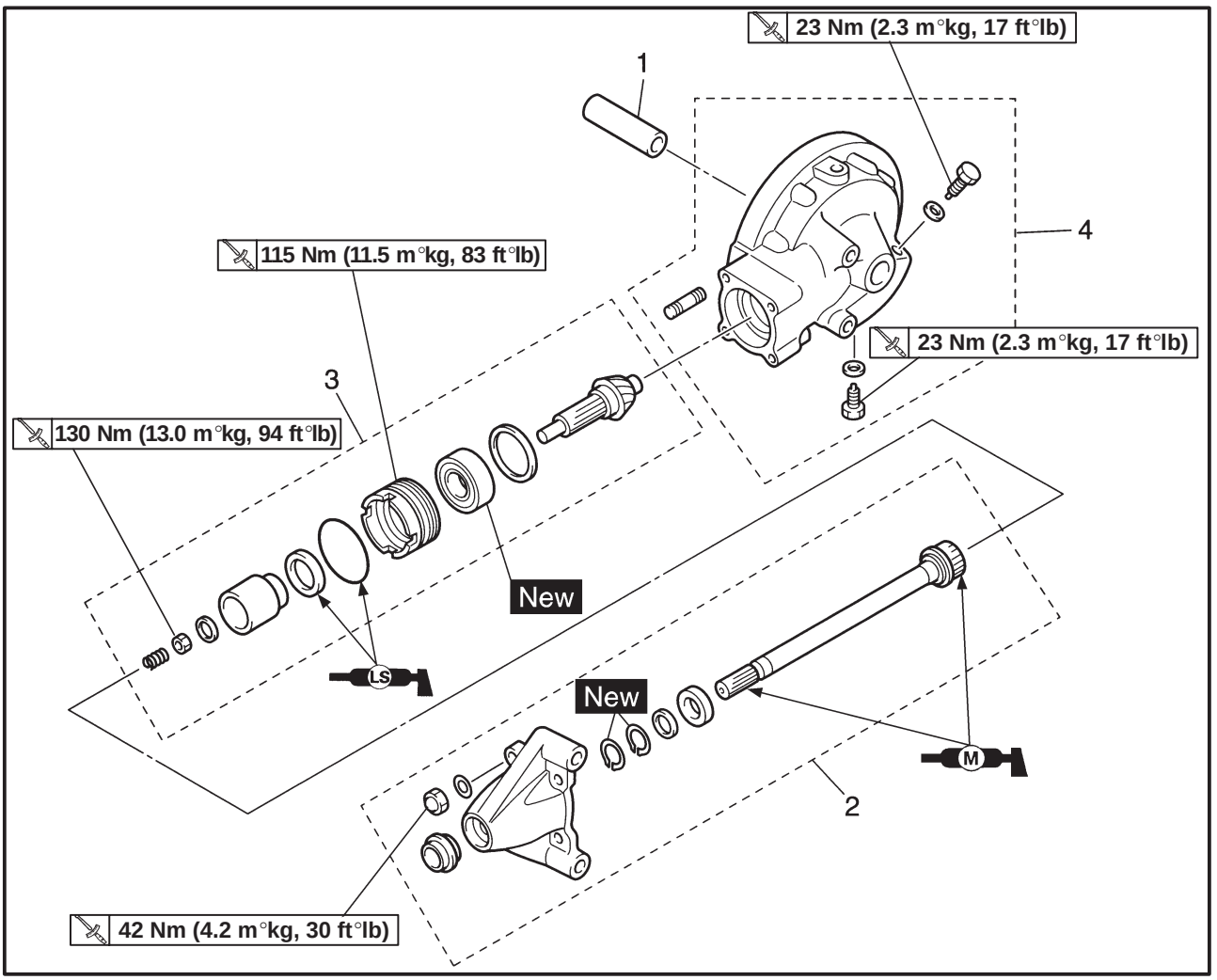

Order	Job name/Part name	Q'ty	Remarks
	Removing the final drive assembly and drive shaft.		Remove the parts in the order listed. Stand the motorcycle on a level surface. **WARNING** **Securely support the motorcycle so there is no danger of it falling over.**
	Rear wheel assembly		Refer to "REAR WHEEL AND BRAKE DISC".
1	Collar	1	
2	Drive shaft assembly	1	
3	Final drive pinion gear assembly	1	Refer to "DISASSEMBLING THE FINAL DRIVE ASSEMBLY/ALIGNING THE FINAL DRIVE PINION GEAR AND RING GEAR".
4	Final gear assembly	1	For installation, reverse the removal procedure.

FINAL GEAR

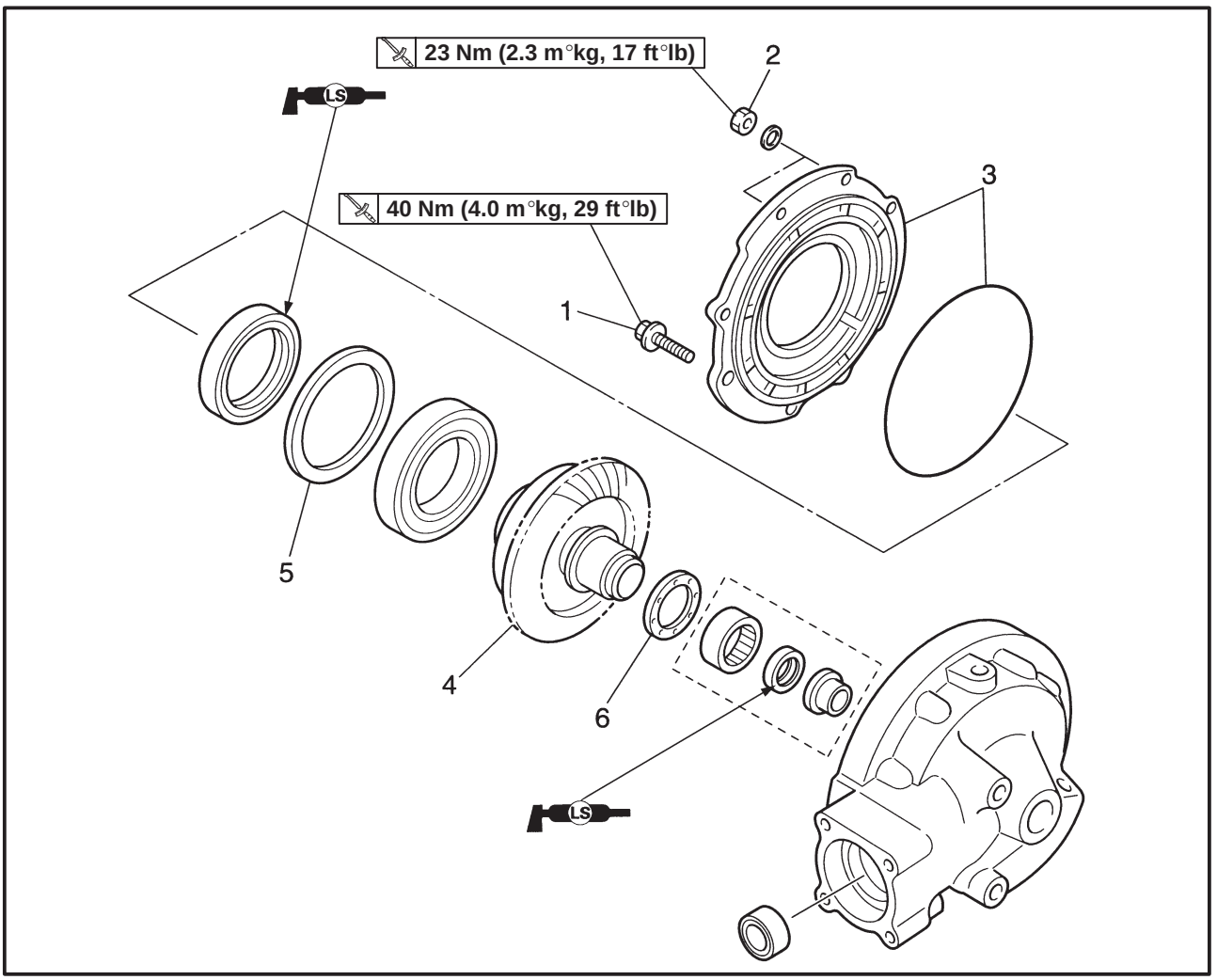

Order	Job name/Part name	Q'ty	Remarks
	Disassembling the final gear.		Disassemble the parts in the order listed.
1	Bolts (bearing housing)	2	**NOTE:**
2	Nuts (bearing housing)	6	Working in a crisscross pattern, loosen each bolt and nut 1/4 of a turn. After all the bolts and nuts are loosened, remove them.
3	Bearing housing/O-ring	1/1	
4	Ring gear	1	
5	Shim (s)	1	
6	Thrust washer	1	
			For assembly, reverse the disassembly procedure.

EAS00724

DISASSEMBLING THE FINAL DRIVE ASSEMBLY

1. Remove:
   - ring gear bearing housing nuts
   - ring gear bearing housing bolts

NOTE:

Working in a crisscross pattern, loosen each bolts and nuts 1/4 of a turn. After all of the bolts and nuts are fully loosened, and remove them.

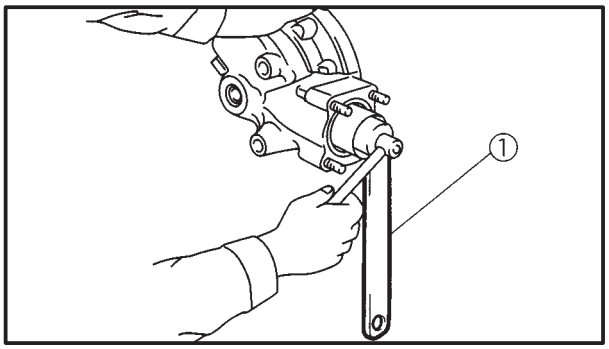

2. Remove:
   - self-locking nut
   - gear coupling
     (with the special tool ①)

	Coupling gear/middle shaft tool **YM-01229, 90890-01229**

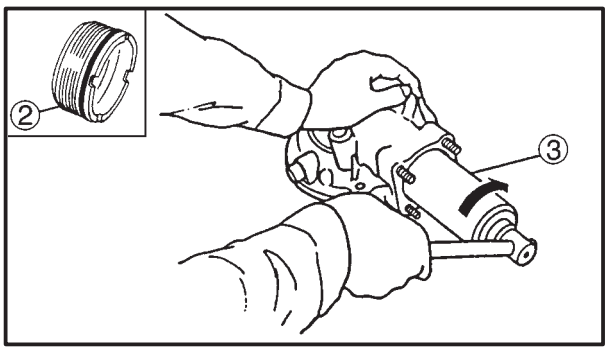

3. Remove:
   - bearing retainer ②
     (with the special tool ③)

	Bearing retainer wrench **YM-33214, 90890-04077**

CAUTION:

The bearing retainer has left-hand threads. To loosen the bearing retainer, turn it clockwise.

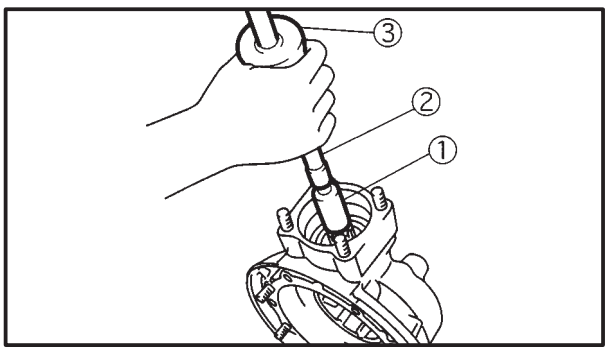

4. Remove:
   - final drive pinion gear
     (with the special tools)

	Crankshaft installer bolt adapter ① **YM-90069, 90890-01277** **Armature shock puller ②** **YU-1047-3, 90890-01290** **Weight ③** **YU-1047-4, 90890-01291**

⚠ WARNING

Always use new bearings.

CAUTION:

The final drive pinion gear should only be removed if ring gear replacement is necessary.

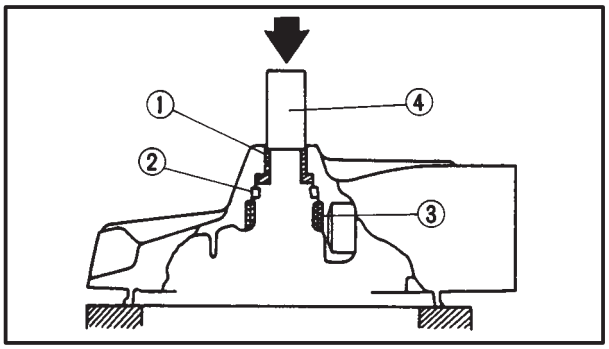

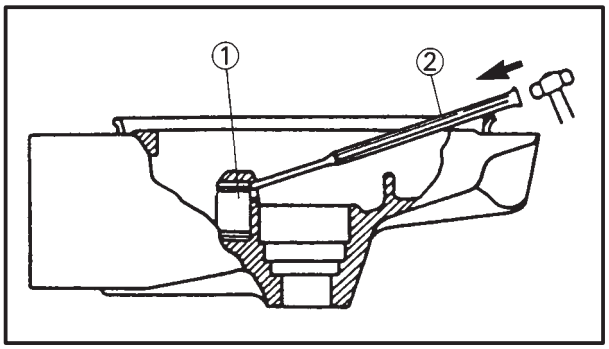

EAS06725

REMOVING AND INSTALLING THE RING GEAR BEARINGS

1. Remove:
   - collar ①
   - oil seal ②
   - bearing ③
     (with an appropriate press tool ④ and an appropriate support for the final drive housing)
2. Check:
   - bearing
     Damage → Replace.
3. Remove:
   - bearing ①

▼▼▼▼▼▼▼▼▼▼▼▼▼▼▼▼▼▼▼▼▼▼▼▼▼▼▼▼▼▼▼▼

a. Heat the final gear case to approximately 150°C (302°F).
b. Remove the bearing outer races with an appropriately shaped punch ②.
c. Remove the inner race from the final drive pinion gear.

NOTE:

The removal of the final drive pinion gear bearing is a difficult procedure and is rarely necessary.

▲▲▲▲▲▲▲▲▲▲▲▲▲▲▲▲▲▲▲▲▲▲▲▲▲▲▲▲▲▲▲▲

4. Install:
   - bearing (New)

▼▼▼▼▼▼▼▼▼▼▼▼▼▼▼▼▼▼▼▼▼▼▼▼▼▼▼▼▼▼▼▼

a. Heat the final gear case to approximately 150°C (302°F).
b. Install the bearing outer races with a socket or appropriate tool that matches the diameter of the races.
c. Install the inner race onto the final drive pinion gear.

▲▲▲▲▲▲▲▲▲▲▲▲▲▲▲▲▲▲▲▲▲▲▲▲▲▲▲▲▲▲▲▲

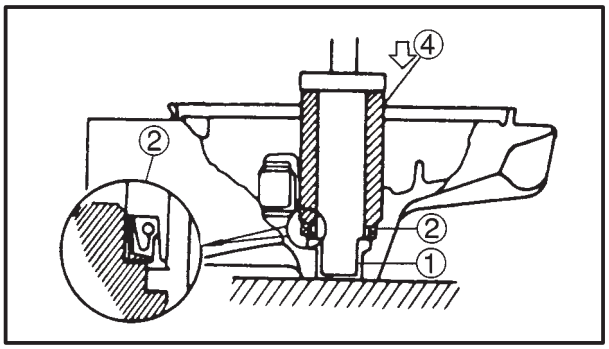

5. Install:
   - collar ①
   - oil seal ② New
   - bearing ③
     (with an appropriate press tool ④ and press)

NOTE:

The bearing can be reused, but Yamaha recommends installing a new one.

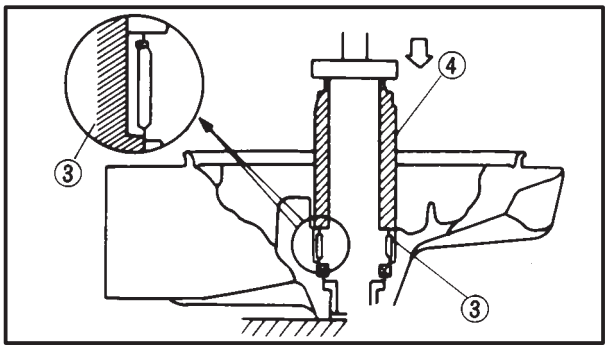

EAS00726

ALIGNING THE FINAL DRIVE PINION GEAR AND RING GEAR

NOTE:

Aligning the final drive pinion gear and ring gear is necessary when any of the following parts are replaced:
- Final drive housing
- Any bearing

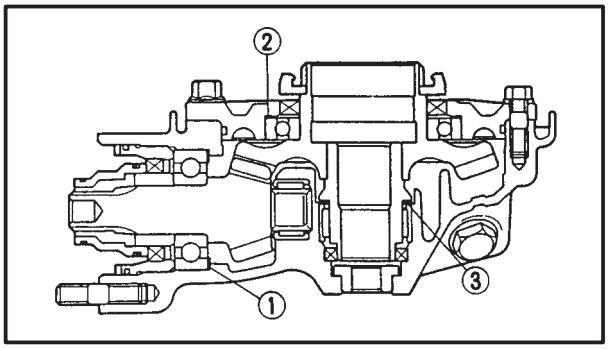

1. Select:
   - final drive pinion gear shim(-s) ①
   - ring gear shim(-s) ②

▼▼▼▼▼▼▼▼▼▼▼▼▼▼▼▼▼▼▼▼▼▼▼▼▼▼▼▼▼▼▼▼

a. Position the final drive pinion gear and the ring gear with shims ① and ②. Calculate the respective thicknesses from information marked on the final drive housing and the drive pinion gear.

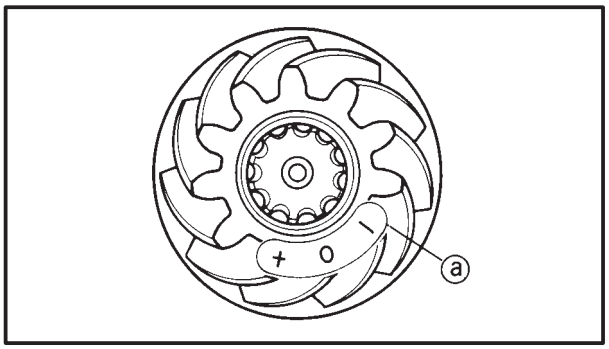

① Final drive pinion gear shim

② Ring gear shim

③ Thrust washer

b. To find final drive pinion gear shim thickness "A" use the following formula:

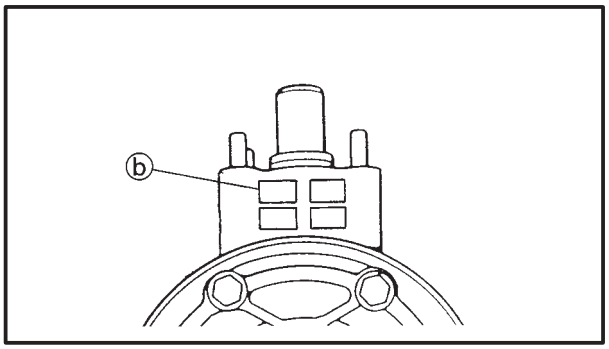

Final drive pinion gear shim thickness
A = (84 + ⓐ/100) – ⓑ

Where:
a = a numeral (positive or negative) on the ring gear, to be divided by 100 and added to “84”
b = a numeral on the final drive housing.
Example:
If the final drive pinion gear is marked “+ 01” and the final drive housing is marked “83.50”:
A = (84 + 1/100) – (83.50)
= (84 + 0.01) – (83.50)
= 84.01 – 83.50
= 0.51
Therefore, the calculated final drive pinion gear shim thickness is 0.51 mm.
Shim sizes are supplied in the following thicknesses.

Final drive pinion gear shim	
Thickness (mm)	**0.30, 0.40, 0.50**

Since the final drive pinion gear shims are only available in 0.10 mm increments, round off to the hundredths digit.

Hundredths	Rounded value
0, 1, 2, 3, 4	**0**
5, 6, 7, 8, 9	**10**

In the example above, the calculated final drive pinion gear shim thickness is 0.51 mm. The chart instructs you to round off the 1 to 0. Thus, you should use a 0.50 mm final drive pinion gear shim.

c. To find ring gear shim thickness “B”, use the following formula:

Ring gear shim thickness
B = ⓒ + ⓓ – [(35.40 + ⓔ/100) + ⓕ]

Where:
ⓒ = a numeral on the final drive housing.
ⓓ = a numeral usually on the outside of the ring gear bearing housing.
ⓔ = a numeral (positive or negative) on the inside of the ring gear, to be divided by 100 and added to “35.40”.

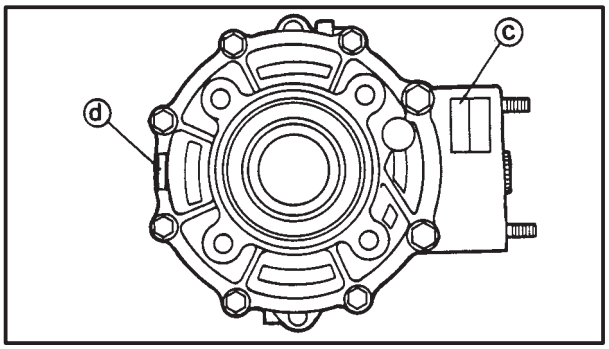

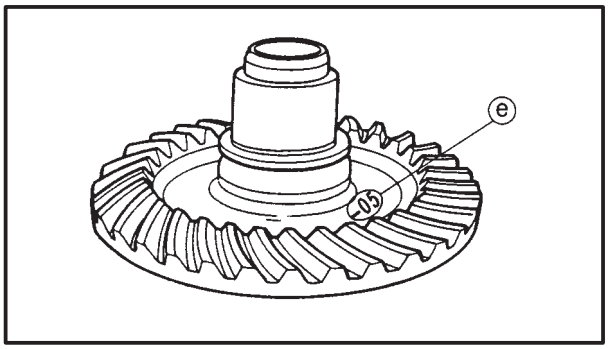

ⓕ = the ring gear bearing thickness constant

	Ring gear bearing thickness“ⓕ” **13.00 mm**

Example:
If the final drive housing is marked “45.51” the ring gear bearing housing is marked “3.35” the ring gear is marked “-05”, and “f” is 13.00:

B = 45.51 + 3.35 – [(35.40 – 5/100) + 13]
= 45.51 + 3.35 – [(35.40 – 0.05) + 13]
= 48.86 – [35.35 + 13]
= 48.86 – 48.35
= 0.51

Therefore, the calculated ring gear shim thickness is 0.51 mm.
Shim sizes are supplied in the following thickness.

	Ring gear shim
Thickness (mm)	**0.30, 0.40, 0.50**

Since the ring gear shims are only available in 0.10 mm increments, round off the hundredths digit.

Hundredths	Rounded value
0, 1, 2, 3, 4	**0**
5, 6, 7, 8, 9	**10**

In the example above, the calculated final gear shim thickness is 0.51 mm. The chart instructs you to round off the 1 to 0. Thus, you should use a 0.50 mm ring gear shim.

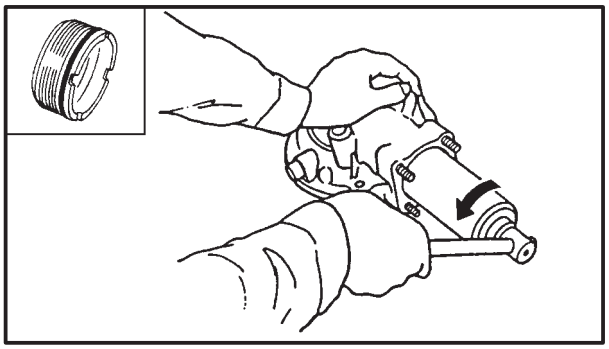

2. Install:
   - shim(s) (as calculated)
   - final drive pinion gear
   - bearing retainer **115 Nm (11.5 m·kg, 83 ft·lb)** (with the bearing retainer wrench)

CAUTION:

The bearing retainer has left-hand threads. To tighten the bearing retainer, turn it counterclockwise.

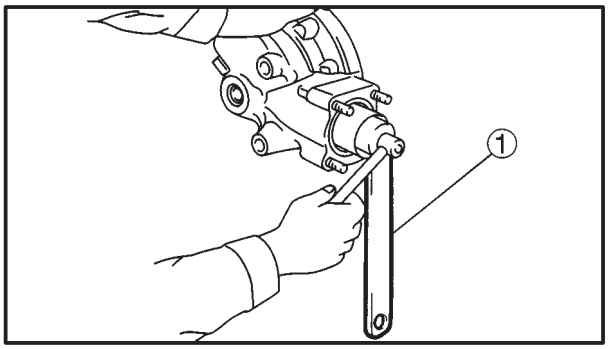

Bearing retainer wrench
YM-33214, 90890-04077

3. Install:
   - gear coupling
   - self-locking nut **130 Nm (13.0 m·kg, 94 ft·lb)**
   (with the special tool ①)

Coupling gear/middle shaft tool
YM-01229, 90890-01229

CAUTION:

Apply LOCTITE® to the self-locking nut.

4. Install:
   - ring gear bearing housing
   (along with the ring gear, but without the thrust washer)
5. Adjust:
   - ring gear backlash
   Refer to "MEASURING THE RING GEAR BACKLASH" and "ADJUSTING THE RING GEAR BACKLASH".
6. Measure:
   - ring-gear-to-thrust-washer clearance

▼▼▼▼▼▼▼▼▼▼▼▼▼▼▼▼▼▼▼▼▼▼▼▼▼▼▼▼▼▼▼▼▼▼

a. Remove the ring gear bearing housing (along with the ring gear).
b. Place four pieces of Plastigauge® between the original thrust washer and the ring gear.
c. Install the ring gear bearing housing and tighten the bolts, and nuts to specification.

Ring gear bearing housing bolt (M10)
40 Nm (4.0 m·kg, 29 ft·lb)
Ring gear bearing housing nut (M8)
23 Nm (2.3 m·kg, 17 ft·lb)

NOTE:

Do not turn the final drive pinion gear and ring gear while measuring the ring-gear-to-thrust-washer clearance with Plastigauge®.

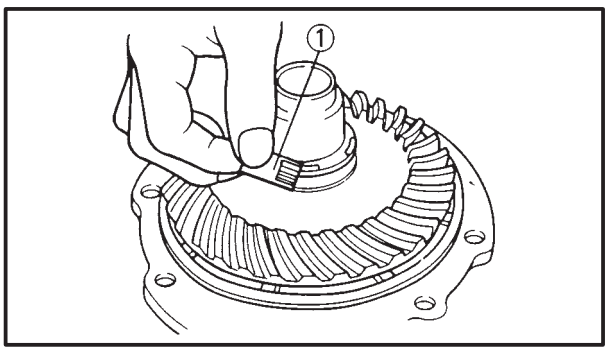

d. Remove the ring gear bearing housing.
e. Measure the width of the flattened Plastigauge® ①.

Ring-gear-to-thrust-washer clearance
0.2 mm (0.008 in)

f. If the ring-gear-to-thrust-washer clearance is within specification, install the ring gear bearing housing (along with the ring gear).

g. If the ring-gear-to-thrust-washer clearance is out of specification, select the correct thrust washer as follows.
h. Select the suitable thrust washer from the following chart.

Thrust washer	
Thickness (mm)	**1.2, 1.4, 1.6, 1.8, 2.0**

i. Repeat the measurement steps until the ring-gear-to-thrust-washer clearance is within the specified limits.

Ring-gear-to-thrust-washer clearance
0.2 mm (0.008 in)

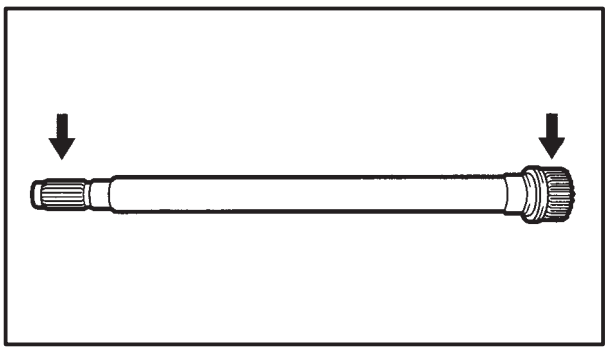

EAS00727
CHECKING THE DRIVE SHAFT
1. Check:
   - drive shaft splines
     Damage/wear → Replace the drive shaft.

EAS00728
INSTALLING THE DRIVE SHAFT
1. Lubricate:
   - drive shaft splines

Recommended lubricant
Molybdenum disulfide grease

2. Apply:
   - sealant
     (onto both final drive housing mating surfaces)

Quickgasket®
Yamaha bond No. 1215
ACC-1100-15-01, 90890-85505

3. Install:
   - drive shaft
     (to the final drive pinion gear)

4. Tighten:
   - final bearing housing nuts

	42 Nm (4.2 m°kg, 30 ft°lb)

5. Install:
   - rear wheel assembly
     Refer to “REAR WHEEL AND BRAKE DISC”.

CHAPTER 7
ELECTRICAL

ELECTRICAL COMPONENTS 7-1

SWITCHES 7-2
CHECKING SWITCH CONTINUITY 7-2

CHECKING THE SWITCHES 7-3

CHECKING THE BULBS AND BULB SOCKETS 7-5
TYPES OF BULBS 7-5
CHECKING THE CONDITION OF THE BULBS 7-5
CHECKING THE CONDITION OF THE BULB SOCKETS 7-7

IGNITION SYSTEM 7-8
CIRCUIT DIAGRAM 7-8
TROUBLESHOOTING 7-9

ELECTRIC STARTING SYSTEM 7-13
CIRCUIT DIAGRAM 7-13
STARTING CIRCUIT OPERATION 7-14
TROUBLESHOOTING 7-15
STARTER MOTOR 7-19

CHARGING SYSTEM 7-23
CIRCUIT DIAGRAM 7-23
TROUBLESHOOTING 7-24

LIGHTING SYSTEM 7-26
CIRCUIT DIAGRAM 7-26
TROUBLESHOOTING 7-27
CHECKING THE LIGHTING SYSTEM 7-28

SIGNAL SYSTEM 7-31
CIRCUIT DIAGRAM 7-31
TROUBLESHOOTING 7-33
CHECKING THE SIGNALING SYSTEM 7-34

FUEL PUMP SYSTEM 7-39
CIRCUIT DIAGRAM 7-39
FUEL PUMP CIRCUIT OPERATION 7-40
TROUBLESHOOTING 7-41
FUEL PUMP TEST 7-43

CARBURETOR HEATER SYSTEM 7-44
CIRCUIT DIAGRAM 7-44
TROUBLESHOOTING 7-45

EVAPORATIVE EMISSION CONTROL SYSTEM 7-48
TROUBLESHOOTING 7-48

SELF-DIAGNOSIS 7-50
TROUBLESHOOTING 7-51

EB800000

ELECTRICAL

ELECTRICAL COMPONENTS

① Main switch
② Thermo switch
③ Flasher relay
④ Starting circuit cut off relay
⑤ Ignition coil
⑥ Starter relay
⑦ Fuse
⑧ Igniter unit
⑨ Side stand switch
⑩ Neutral switch
⑪ Rectifier/regulator
⑫ Oil lamp relay
⑬ Battery
⑭ Rear brake switch
⑮ Horn

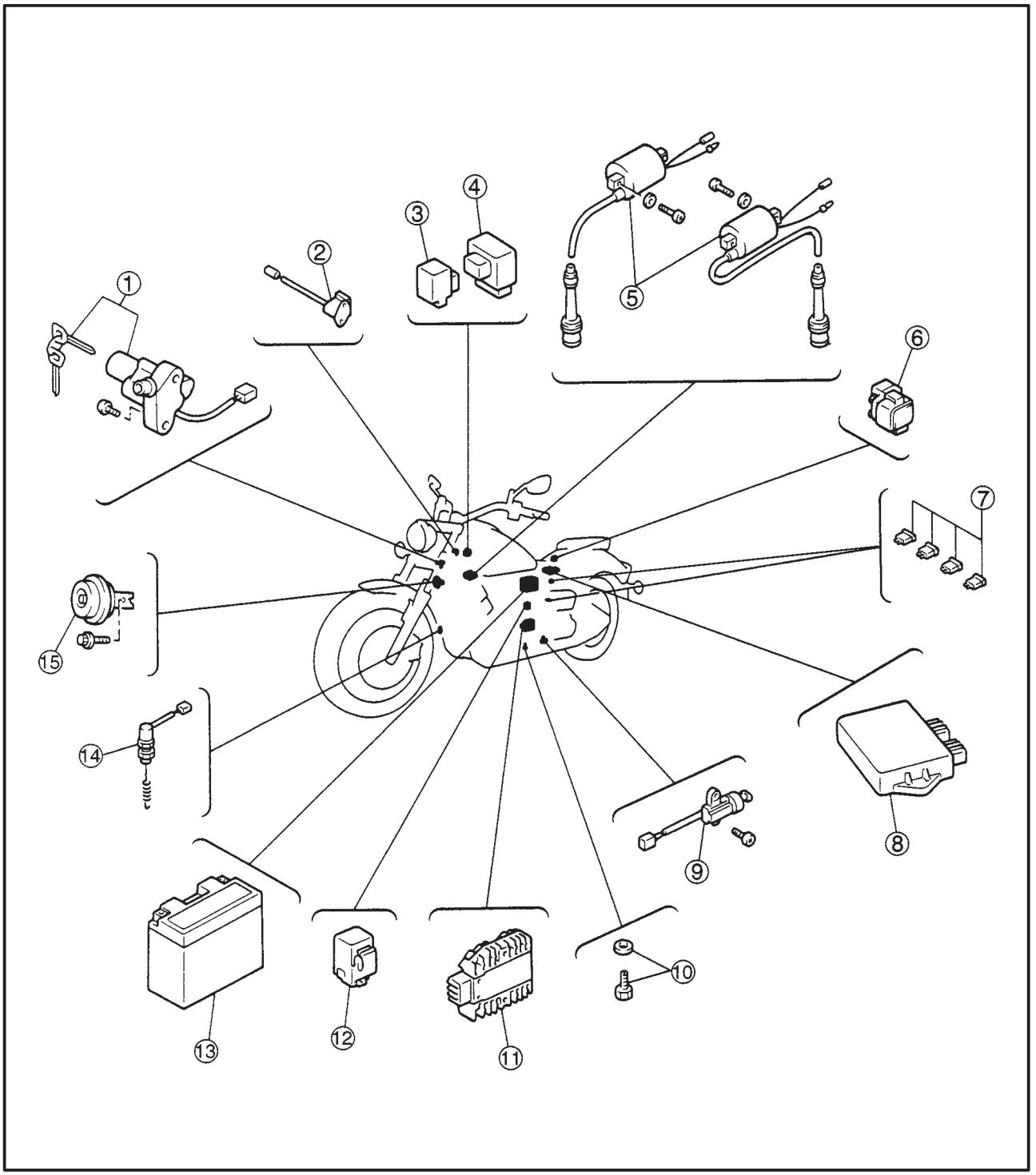

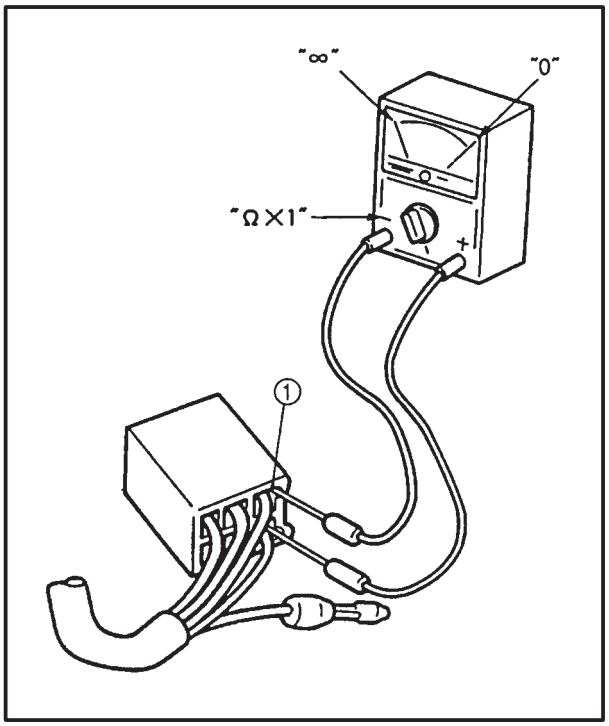

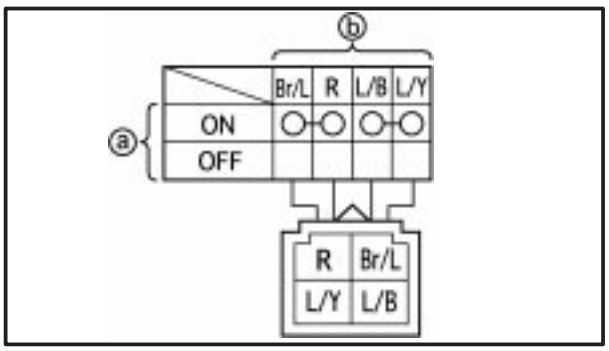

EAS0010

SWITCHES

CHECKING SWITCH CONTINUITY

Check each switch for continuity with the pocket tester. If the continuity reading is incorrect, check the wiring connections and if necessary, replace the switch.

CAUTION:

Never insert the tester probes into the coupler terminal slots ①. Always insert the probes from the opposite end of the coupler, taking care not to loosen or damage the leads.

Pocket tester
YU-03112, 90890-03112

NOTE:

- Before checking for continuity, set the pocket tester to "0" and to the "Ω × 1" range.
- When checking for continuity, switch back and forth between the switch positions a few times.

The terminal connections for switches (e.g., main switch, engine stop switch) are shown in an illustration similar to the one on the left.
The switch positions ⓐ are shown in the far left column and the switch lead colors ⓑ are shown in the top row in the switch illustration.

NOTE:

"○——○" indicates a continuity of electricity between switch terminals (i.e., a closed circuit at the respective switch position).

The example illustration on the left shows that:

There is continuity between blue/red and red when the switch is set to "P≤".
There is continuity between blue/red and blue, between brown/blue and red, and between blue/yellow and black when the switch is set to "ON".

EAS00731
CHECKING THE SWITCHES

Check each switch for damage or wear, proper connections, and also for continuity between the terminals. Refer to “CHECKING SWITCH CONTINUITY”.

Damage/wear → Repair or replace the switch.
Improperly connected → Properly connect.
Incorrect continuity reading → Replace the switch.

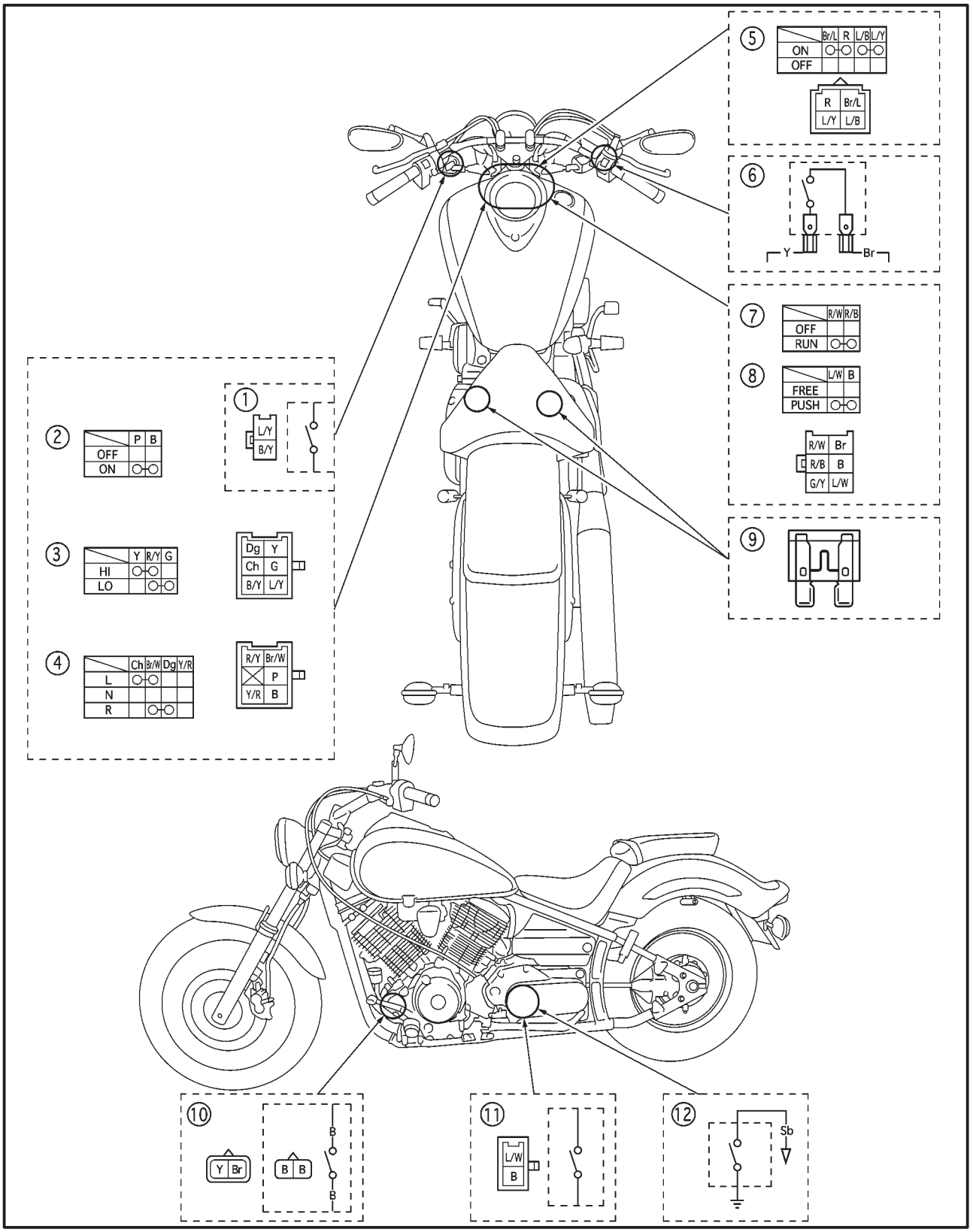

1. Clutch switch
2. Horn switch
3. Dimmer switch
4. Turn switch
5. Main switch
6. Front brake switch
7. Engine stop switch
8. Start switch
9. Fuse
10. Rear brake switch
11. Sidestand switch
12. Neutral switch

EAS00732

CHECKING THE BULBS AND BULB SOCKETS

Check each bulb and bulb socket for damage or wear, proper connections, and also for continuity between the terminals.
Damage/wear → Repair or replace the bulb, bulb socket or both.
Improperly connected → Properly connect.
Incorrect continuity reading → Repair or replace the bulb, bulb socket or both.

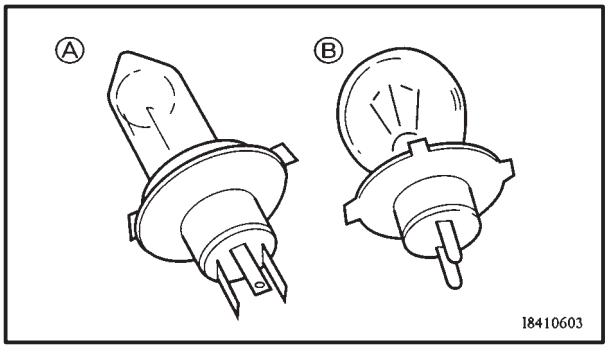

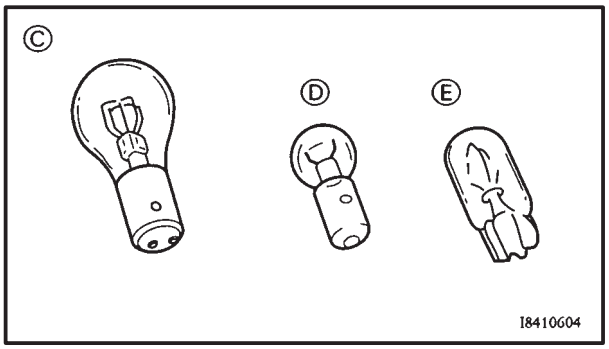

TYPES OF BULBS

The bulbs used on this motorcycle are shown in the illustration on the left.

- Bulbs Ⓐ and Ⓑ are used for headlights and usually use a bulb holder which must be detached before removing the bulb. The majority of these bulbs can be removed from their respective socket by turning them counterclockwise.
- Bulb Ⓒ is used for turn signal and tail/brake lights and can be removed from the socket by pushing and turning the bulb counterclockwise.
- Bulbs Ⓓ and Ⓔ are used for meter and indicator lights and can be removed from their respective socket by turn Ⓓ and pulling Ⓔ them out.

CHECKING THE CONDITION OF THE BULBS

The following procedure applies to all of the bulbs.

1. Remove:
   - bulb

WARNING

Since the headlight bulb gets extremely hot, keep flammable products and your hands away from the bulb until it has cooled down.

CAUTION:

- **Be sure to hold the socket firmly when removing the bulb. Never pull the lead, otherwise it may be pulled out of the terminal in the coupler.**
- **Avoid touching the glass part of the headlight bulb to keep it free from oil, otherwise the transparency of the glass, the life of the bulb and the luminous flux will be adversely affected. If the headlight bulb gets soiled, thoroughly clean it with a cloth moistened with alcohol or lacquer thinner.**

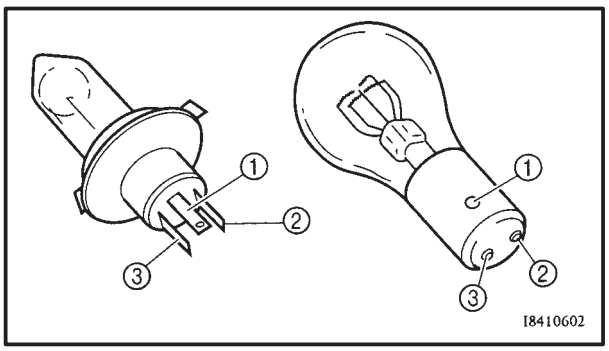

2. Check:
   - bult (for continuity)
     (with the pocket tester)
     No continuity → Replace.

	Pocket tester **YU-03112, 90890-03112**

NOTE:

Before checking for continuity, set the pocket tester to “0” and to the “Ω √ 1” range.

a. Connect the tester positive probe to terminal ① and the tester negative probe to terminal ②, and check the continuity.
b. Connect the tester positive probe to terminal ① and the tester negative probe to terminal ③, and check the continuity.
c. If either of the readings indicate no continuity, replace the bulb.

CHECKING THE CONDITION OF THE BULB SOCKETS

The following procedure applies to all of the bulb sockets.

1. Check:
   - bulb socket (for continuity) (with the pocket tester)
     No continuity → Replace.

	Pocket tester **YU-03112, 90890-03112**

NOTE:

Check each bulb socket for continuity in the same manner as described in the bulb section; however, note the following.

▼▼▼▼▼▼▼▼▼▼▼▼▼▼▼▼▼▼▼▼▼▼▼▼▼▼▼▼▼▼▼▼▼▼

a. Install a good bulb into the bulb socket.
b. Connect the pocket tester probes to the respective leads of the bulb socket.
c. Check the bulb socket for continuity.
   If any of the readings indicate no continuity, replace the bulb socket.

▲▲▲▲▲▲▲▲▲▲▲▲▲▲▲▲▲▲▲▲▲▲▲▲▲▲▲▲▲▲▲▲▲▲

EB802000

IGNITION SYSTEM

CIRCUIT DIAGRAM

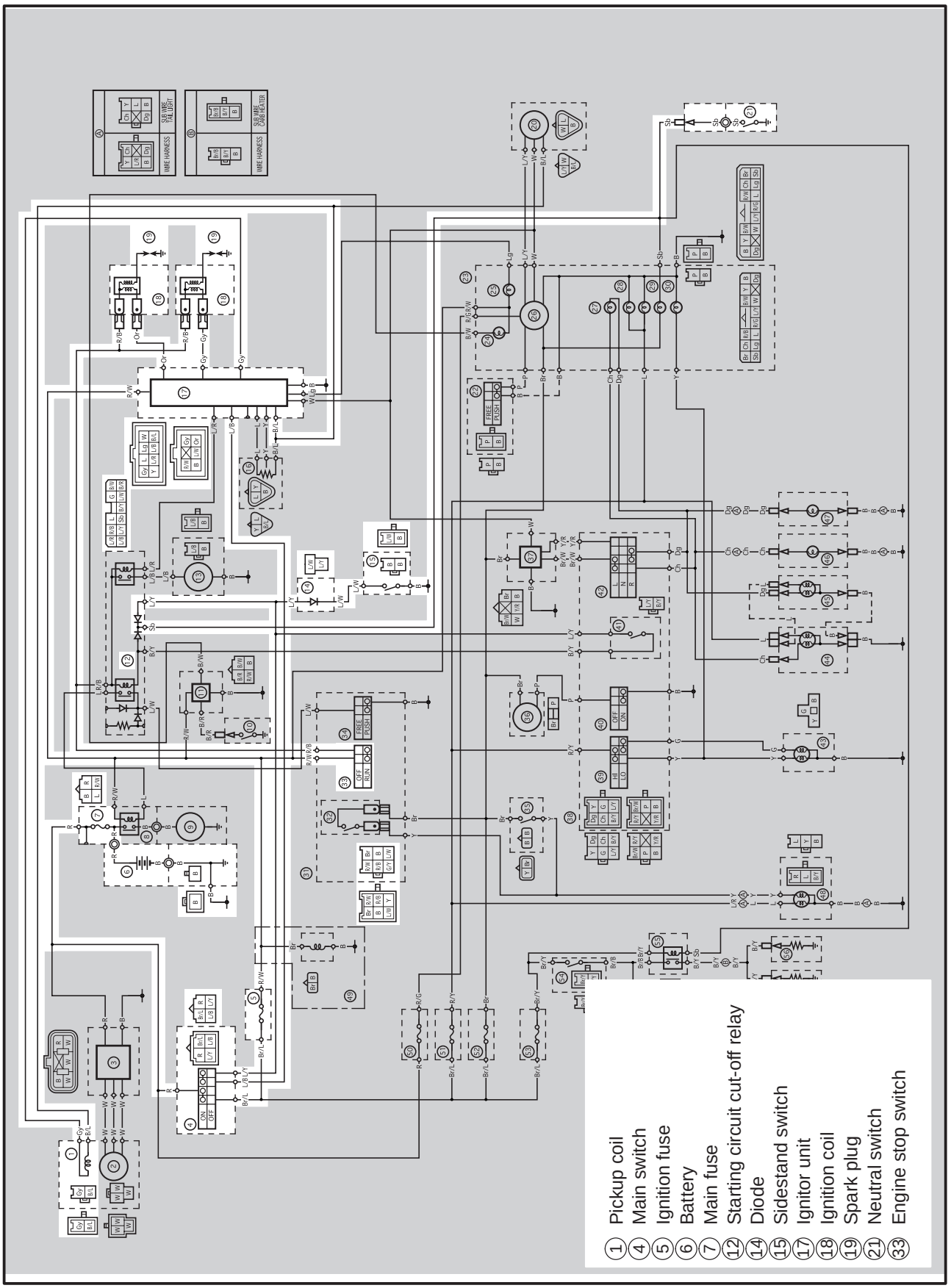

EAS00737

TROUBLESHOOTING

The ignition system fails to operate (no spark or intermittent spark).

Check:
1. main and ignition fuses
2. battery
3. spark plugs
4. ignition spark gap
5. spark plug cap resistance
6. ignition coil resistance
7. pickup coil resistance
8. main switch
9. engine stop switch
10. neutral switch
11. sidestand switch
12. diode
13. starting circuit cut-off relay (diode)
14. wiring
    (of the entire ignition system)

NOTE:

° Before troubleshooting, remove the following part(-s):
1) battery cover
2) rider's seat
3) fuel tank
4) steering head side covers
5) tool box cover
6) left side cover
7) cylinder head covers

° Troubleshoot with the following special tool(-s).

Ignition checker
YM-34487, 90890-06754
Pocket tester
YU-03112, 90890-03112

EAS00738

1. Main and ignition fuses

° Check the main and ignition fuses for continuity.
Refer to "CHECKING THE FUSES" in chapter 3.
° Are the main and ignition fuses OK?

YES → NO → Replace the fuse(-s).

EAS00739

2. Battery

° Check the condition of the battery.
Refer to "CHECKING AND CHARGING THE BATTERY" in chapter 3.

Min. open-circuit voltage
12.8 V or more at 20°C (68°F)

° Is the battery OK?

YES → NO →
° Clean the battery terminals.
° Recharge or replace the battery.

EAS00741

3. Spark plugs

The following procedure applies to all of the spark plugs.
° Check the condition of the spark plug.
° Check the spark plug type.
° Measure the spark plug gap.
Refer to "CHECKING THE SPARK PLUGS" in chapter 3.

Standard spark plug
BPR7ES
W22EPR-U
Spark plug gap
0.7 ~ 0.8 mm (0.028 ~ 0.031 in)

° Is the spark plug in good condition, is it of the correct type, and its gap within specification?

YES → NO →
Re-gap or replace the spark plug.

EAS00743

4. Ignition spark gap

The following procedure applies to all of the spark plugs.
- Disconnect the spark plug cap from the spark plug.
- Connect the ignition checker ① as shown.
- ② Spark plug cap
- Set the main switch to “ON”.
- Measure the ignition spark gap ⓐ.
- Crank the engine by pushing the start switch and gradually increase the spark gap until a misfire occurs.

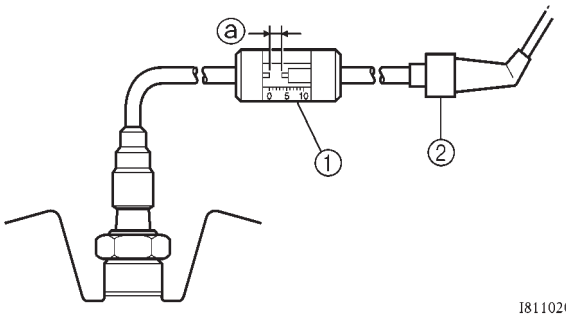

Min. ignition spark gap
6 mm (0.24 in)

- Is there a spark and is the spark gap within specification ?

NO → Replace the spark plug cap.

YES → The ignition system is OK.

EAS00745

5. Spark plug cap resistance.

The following procedure applies to all of the spark plug caps.
- Disconnect the spark plug cap from the spark plug.
- Connect the pocket tester (Ω √ 1k) to the spark plug cap as shown.
- Measure the spark plug cap resistance.

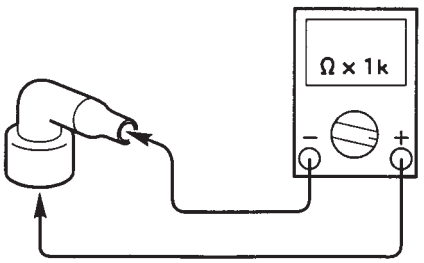

Spark plug cap resistance
10 kΩ at 20°C (68°F)

- Is the spark plug cap OK?

YES → NO → Replace the spark plug cap.

EAS00747

6. Ignition coil resistance

The following procedure applies to all of the ignition coils.
- Disconnect the ignition coil connectors from the ignition coil terminals.
- Connect the pocket tester (Ω √ 1) to the ignition coil as shwon.

Tester positive probe → red/black
Tester negative probe → orange (gray)

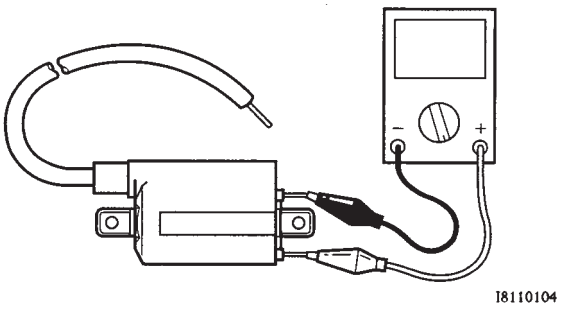

- Measure the primary coil resistance.

Primary coil resistance
3.57 ~ 4.83 Ω at 20°C (68°F)

- Connect the pocket tester (Ω √ 1k) to the ignition coil as shown.
- Measure the secondary coil resistance.

Tester positive probe → spark plug lead ①
Tester negative probe → orange (gray) lead ②

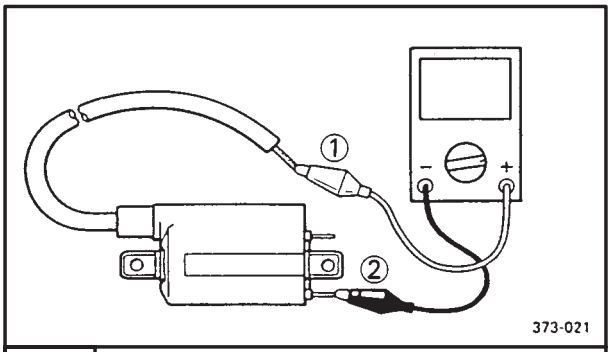

Secondary coil resistance
10.7 ~ 14.5 kΩ 20°C (68°F)

° Is the ignition coil OK?

YES → NO: Replace the ignition coil.

EAS00748

7. Pickup coil resistance

° Disconnect the pickup coil coupler from the wire harness.
° Connect the pocket tester (Ω √ 100) to the pickup coil terminal.

Tester positive probe → gray ①
Tester negative probe → black/blue ②

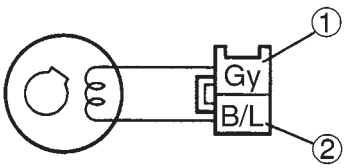

° Measure the pickup coil resistance.

Pickup coil resistance
189 ~ 231 Ω at 20°C (68°F)
(between gray and black/blue)

° Is the pickup coil OK?

YES → NO: Replace the pickup coil.

EAS00749

8. Main switch

° Check the main switch for continuity. Refer to "CHECKING THE SWITCHES".
° Is the main switch OK?

YES → NO: Replace the main switch.

EAS00750

9. Engine stop switch

° Check the engine stop switch for continuity. Refer to "CHECKING THE SWITCHES".
° Is the engine stop switch OK?

YES → NO: Replace the right handlebar switch.

EAS00751

10. Neutral switch

° Check the neutral switch for continuity. Refer to "CHECKING THE SWITCHES".
° Is the neutral switch OK?

YES → NO: Replace the neutral switch.

EAS00752

11. Sidestand switch

° Check the sidestand switch for continuity. Refer to "CHECKING THE SWITCHES".
° Is the sidestand switch OK?

YES → NO: Replace the side-stand switch.

12. Diode

° Remove the diode from the wire harness.
° Check for continuity as follows:

Tester (+) lead → blue/white ① **Tester (–) lead → blue/yellow ②**	**Continuity**
Tester (+) lead → blue/yellow ② **Tester (–) lead → blue/white ①**	**No Continuity**

NOTE:
When you switch the "–" and "+" leads of the digital pocket tester the readings in the above chart will be reversed.

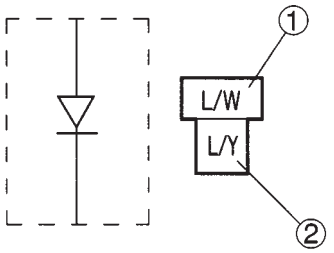

° Is the diode OK?

YES → NO → Replace the diode.

13. Starting circuit cut-off relay (diode)

° Remove the relay unit from the wire harness.
° Check for continuity as follows:
Sky blue – Blue/Yellow ②

Tester (+) lead → sky blue ① **Tester (–) lead → blue/yellow ②**	**Continuity**
Tester (+) lead → blue/yellow ② **Tester (–) lead → sky blue ①**	**No Continuity**

NOTE:
When you switch the "–" and "+" leads of the digital pocket tester the readings in the above chart will be reversed.

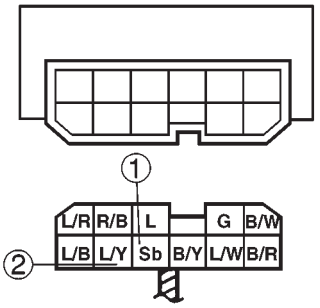

° Is the starting circuit cut-off relay (diode) OK?

YES → NO → Replace the starting circuit cut-off relay.

EAS00754

14. Wiring

° Check the entire ignition system's wiring. Refer to "CIRCUIT DIAGRAM".
° Is the ignition system's wiring properly connected and without defects?

NO → Properly connect or repair the ignition system's wiring.

YES → Replace the ignitor unit.

EB803000

ELECTRIC STARTING SYSTEM

CIRCUIT DIAGRAM

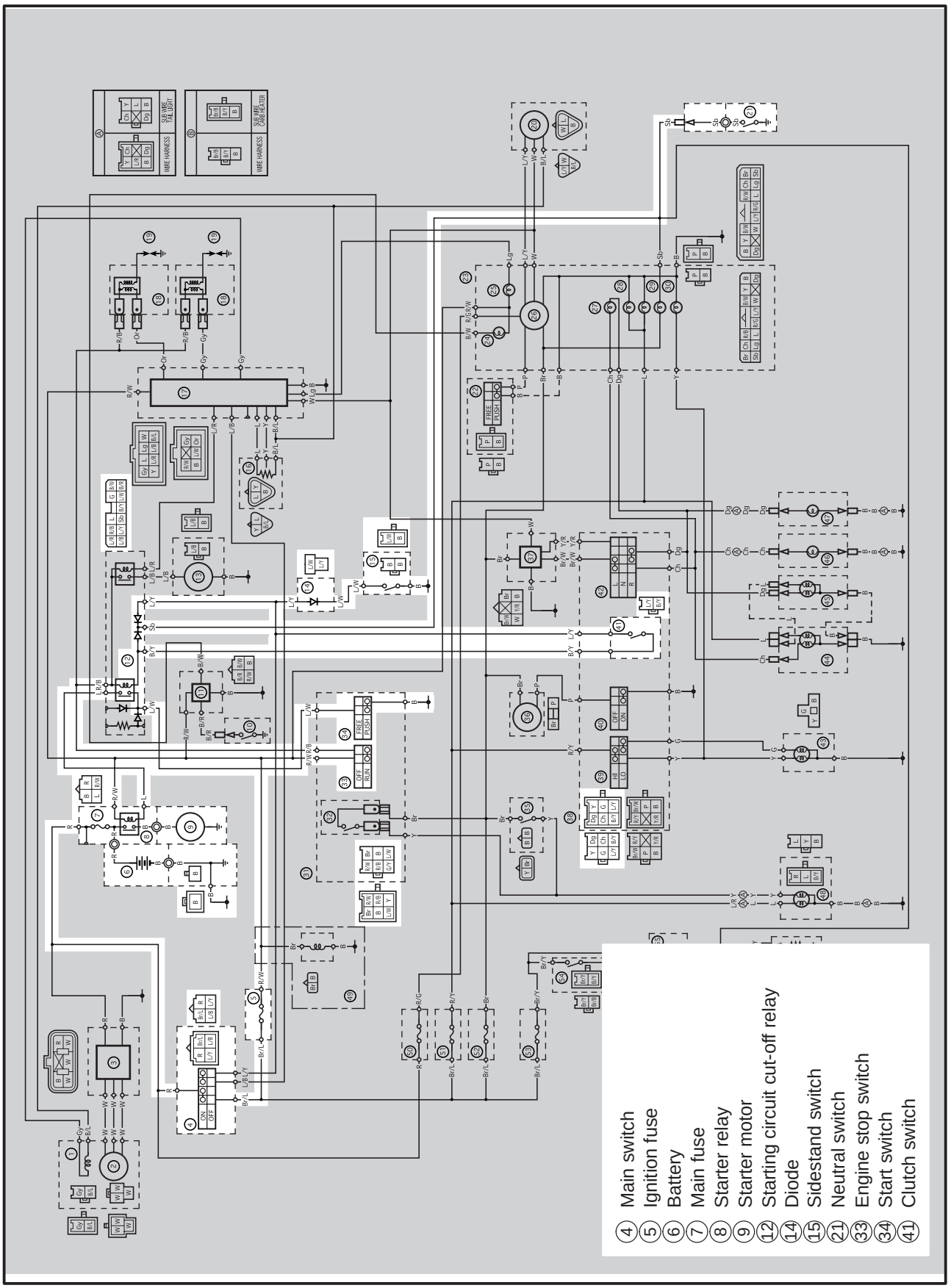

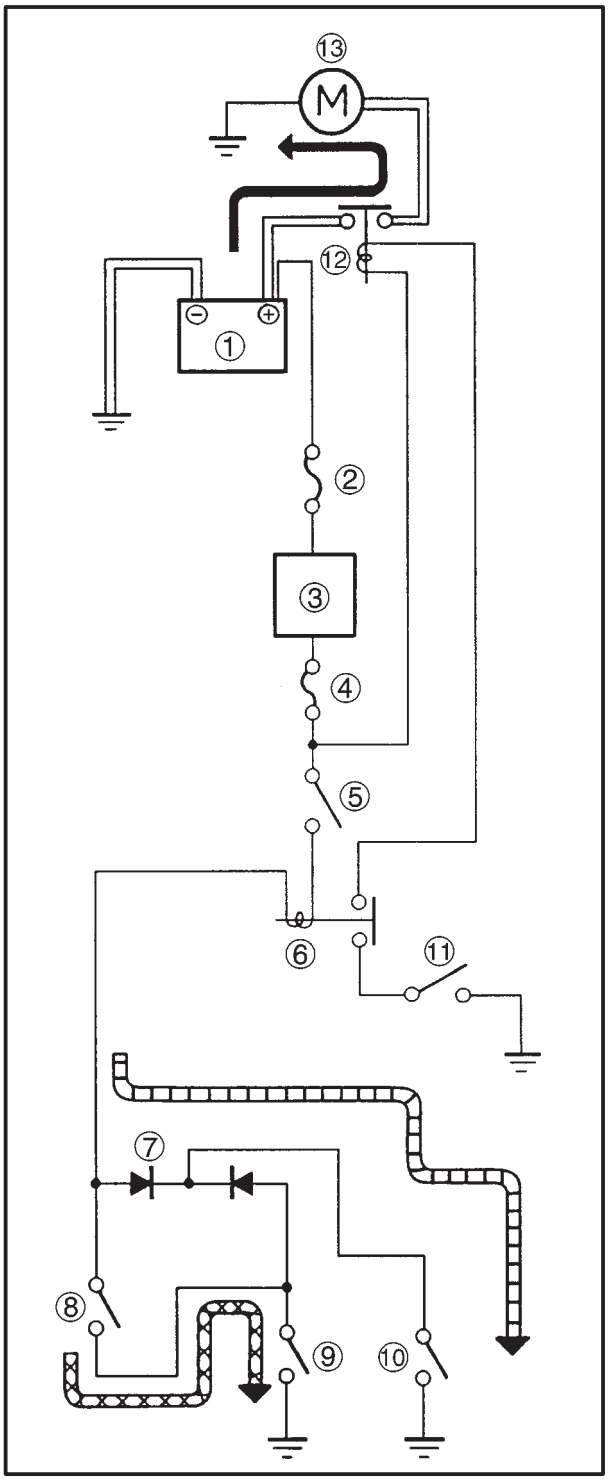

EB803010

STARTING CIRCUIT OPERATION

The starting circuit on this model consists of the starter motor, starter relay, and the starting circuit cut-off relay. If the engine stop switch is on "RUN" and the main switch is on "ON" (both switches are closed), the starter motor can operate only if:

> The transmission is in neutral (the neutral switch is closed).
>
> **or if**
>
> The clutch lever is pulled to the handlebar (the clutch switch is closed) and the sidestand is up (the sidestand switch is closed).

The starting circuit cut-off relay prevents the starter from operating when neither of these conditions have been met. In this instance, the starting circuit cut-off relay is open so current cannot reach the starter motor.

When at least one of the above conditions have been met however, the starting circuit cut-off relay is closed, and the engine can be started by pressing the starter switch.

WHEN THE TRANSMISSION IS IN NEUTRAL

WHEN THE SIDESTAND IS UP AND THE CLUTCH LEVER IS PULLED IN

① Battery
② Main fuse
③ Main switch
④ Ignition fuse
⑤ Engine stop switch
⑥ Starting circuit cut-off relay
⑦ Diode
⑧ Clutch switch
⑨ Sidestand switch
⑩ Neutral switch
⑪ Start switch
⑫ Starter relay
⑬ Starter motor

EAS00757

TROUBLESHOOTING

The starter motor fails to turn.

Check:
1. main and ignition fuses
2. battery
3. starter motor
4. starting circuit cutoff relay
5. starting circuit cutoff relay (diode)
6. starter relay
7. main switch
8. engine stop switch
9. neutral switch
10. sidestand switch
11. clutch switch
12. start switch
13. diode
14. wiring
    (of the entire starting system)

NOTE:

°Before troubleshooting, remove the following part(-s):
1) battery cover
2) rider's seat
3) fuel tank
4) steering head side covers
5) left side cover

°Troubleshoot with the following special tool(-s).

Pocket tester
YU-03112, 90890-03112

EAS00738

1. Main and ignition fuses

°Check the main and ignition fuses for continuity.
Refer to "CHECKING THE FUSES" in chapter 3.
°Are the main and ignition fuses OK?

YES → NO → Replace the fuse(-s).

EAS00739

2. Battery

°Check the condition of the battery.
Refer to "CHECKING AND CHARGING THE BATTERY" in chapter 3.

Open-circuit voltage
12.8 V or more at 20°C (68°F)

°Is the battery OK?

YES → NO → °Clean the battery terminals.
°Recharge or replace the battery.

EAS00758

3. Starter motor

°Connect the battery positive terminal ① and starter motor lead ② with a jumper lead ③.

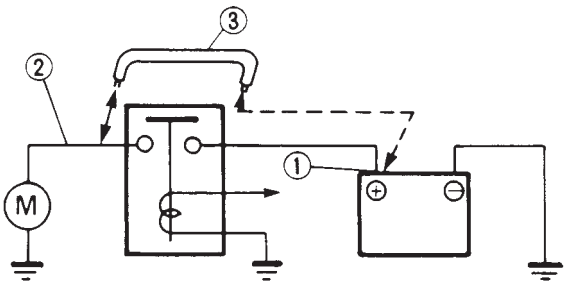

WARNING

- **A wire that is used as a jumper lead must have at least the same capacity of the battery lead, otherwise the jumper lead may burn.**
- **This check is likely to produce sparks, therefore make sure that no flammable gas or fluid is in the vicinity.**

°Does the starter motor turn?

YES → NO → Repair or replace the starter motor.

EAS00759

4. Starting circuit cutoff relay

° Disconnect the relay unit from the coupler.
° Connect the pocket tester (Ω √ 1) and battery (12 V) to the relay unit terminals as shown.

Battery positive terminal → red/black ①
Battery negative terminal → black/yellow ②

Tester positive probe → blue ③
Tester negative probe → blue/white ④

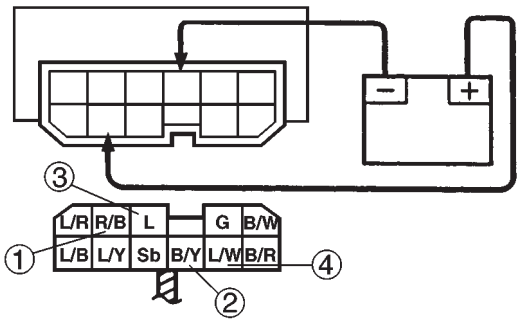

° Does the starting circuit cutoff relay have continuity between blue and blue/white?

YES → NO

Replace the relay unit.

EAS00760

5. Starting circuit cutoff relay (Diode)

° Disconnect the starting circuit cutoff relay from the coupler.
° Connect the pocket tester (Ω √ 1) to the starting circuit cutoff relay terminals as shown.
° Measure the starting circuit cutoff relay for continuity as follows.

Tester positive probe → sky blue ① **Tester negative probe → black/yellow ②**	**Continuity**
Tester positive probe → black/yellow ② **Tester negative probe → sky blue ①**	**No continuity**

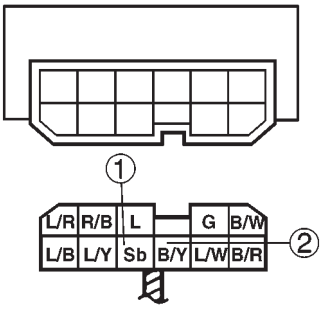

NOTE:

When you switch the "–" and "+" leads of the digital pocket tester the readings in the above chart will be reversed.

° Are the tester readings correct?

YES → NO

Replace the relay unit.

EAS00761

6. Starter relay

- Disconnect the starter relay from the coupler.
- Connect the pocket tester (Ω √ 1) and battery (12 V) to the starter relay coupler as shown.

Battery positive terminal → red/white ①
Battery negative terminal → blue ②

Tester positive probe → red ③
Tester negative probe → black ④

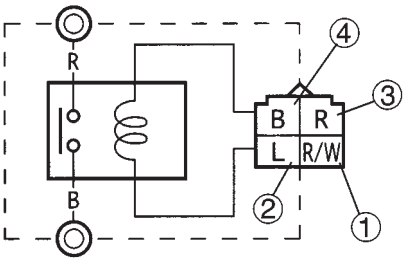

- Does the starter relay have continuity between red and black?

YES → NO → Replace the starter relay.

EAS00749

7. Main switch

- Check the main switch for continuity. Refer to "CHECKING THE SWITCHES".
- Is the main switch OK?

YES → NO → Replace the main switch.

EAS00750

8. Engine stop switch

- Check the engine stop switch for continuity. Refer to "CHECKING THE SWITCHES".
- Is the engine stop switch OK?

YES → NO → Replace the right handlebar switch.

EAS00751

9. Neutral switch

- Check the neutral switch for continuity. Refer to "CHECKING THE SWITCHES".
- Is the neutral switch OK?

YES → NO → Replace the neutral switch.

EAS00752

10. Sidestand switch

- Check the sidestand switch for continuity. Refer to "CHECKING THE SWITCHES".
- Is the sidestand switch OK?

YES → NO → Replace the sidestand switch.

EAS00763

11. Clutch switch

- Check the clutch switch for continuity. Refer to "CHECKING THE SWITCHES".
- Is the clutch switch OK?

YES → NO → Replace the clutch switch.

EAS00764

12. Start switch

- Check the start switch for continuity.
  Refer to “CHECKING THE SWITCHES”.
- Is the start switch OK?

YES → NO → Replace the right handlebar switch.

13. Diode

- Check the diode for continuity.
  Refer to “IGNITION SYSTEM”.
- Is the diode OK?

YES → NO → Replace the diode.

EAS00766

14. Wiring

- Check the entire starting system’s wiring.
  Refer to “CIRCUIT DIAGRAM”.
- Is the starting system’s wiring properly connected and without defects?

NO → Properly connect or repair the starting system’s wiring.

YES → The starting system circuit is OK.

STARTER MOTOR

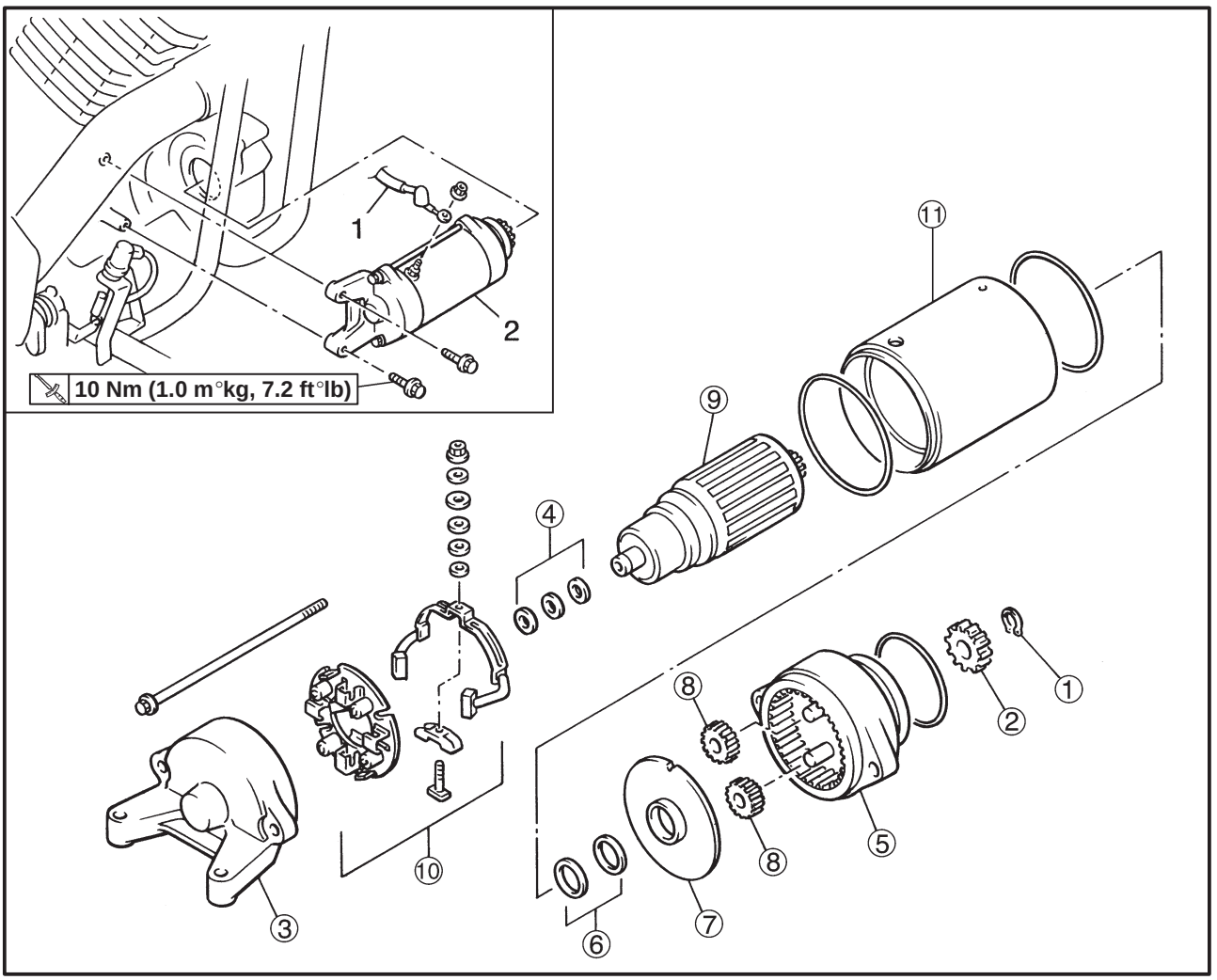

Order	Job name/Part name	Q'ty	Remarks
	Removing the starter motor		Remove the parts in the order listed.
1	Starter motor lead	1	
2	Starter motor assembly	1	
			For installation, reverse the removal procedure.
	Disassembling the starter motor		Disassembly the pats in the order listed.
①	Circlip	1	
②	Starter motor drive gear	1	
③	Starter motor rear cover	1	Refer to "Assembling the starter motor."
④	Washer set	1	
⑤	Starter motor front cover	1	Refer to "Assembling the starter motor."
⑥	Washer set	1	
⑦	End bracket	1	Refer to "Assembling the starter motor."
⑧	Planetary gears	2	
⑨	Armature assembly	1	
⑩	Brush holder/brush	1/1	Refer to "Assembling the starter motor."
⑪	Starter motor yoke	1	
			For assembly, reverse the disassembly procedure

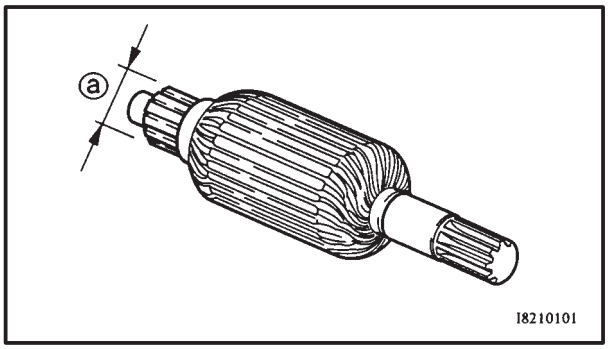

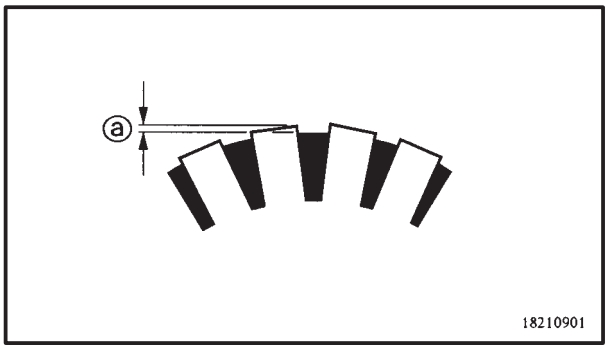

EAS00769

Checking the starter motor

1. Check:
   - commutator
     Dirt → Clean with 600 grit sandpaper.
2. Measure:
   - commutator diameter ⓐ
     Out of specification → Replace the starter motor.

Min. commutator diameter
27 mm (1.06 in)

3. Measure:
   - mica undercut ⓐ
     Out of specification → Scrape the mica to the proper measurement with a hacksaw blade which has been grounded to fit the commutator.

Mica undercut
0.7 mm (0.03 in)

NOTE:

The mica must be undercut to ensure proper operation of the commutator.

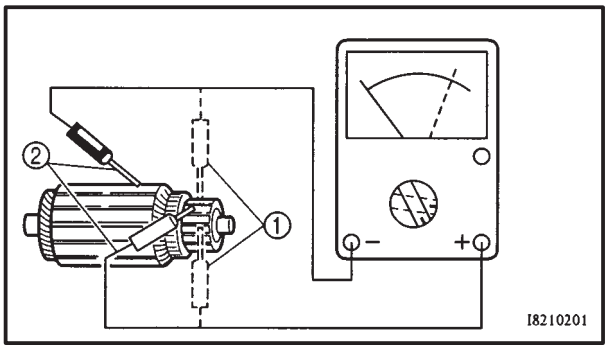

4. Measure:
   - armature assembly resistances (commutator and insulation)
     Out of specification → Replace the starter motor.

▼▼▼▼▼▼▼▼▼▼▼▼▼▼▼▼▼▼▼▼▼▼▼▼▼▼▼▼▼▼▼▼

a. Measure the armature assembly resistances with the pocket tester.

Pocket tester
YU-03112, 90890-03112

Armature assembly
Armature coil resistance ①
0.026 ~ 0.034 Ω at
20°C (68°F)
Insulation resistance ②
Above 1 MΩ at
20°C (68°F)

b. If any resistance is out of specification, replace the starter motor.

▲▲▲▲▲▲▲▲▲▲▲▲▲▲▲▲▲▲▲▲▲▲▲▲▲▲▲▲▲▲▲▲

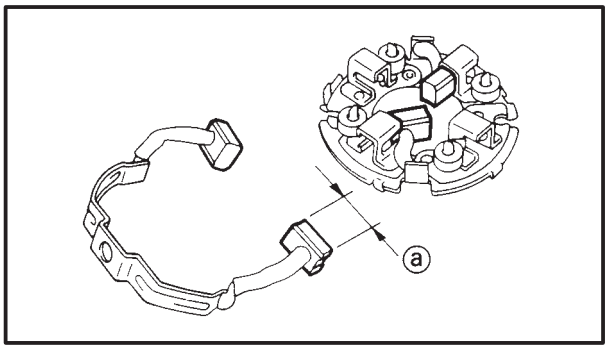

5. Measure:
   - brush length ⓐ
     Out of specification → Replace the brushes as a set.

Min. brush length **5 mm (0.20 in)**

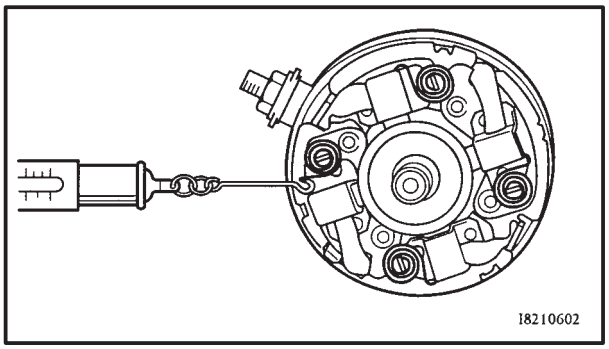

6. Measure:
   - brush spring force
     Out of specification → Replace the brush springs as a set.

Bruch spring force **7.65 ~ 10.01 N (780 ~ 1.020 g, 27.51 ~ 36.01 oz)**

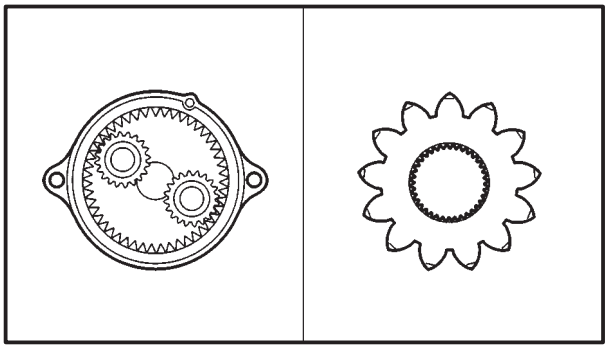

7. Check:
   - gear teeth
     Damage/wear → Replace the gear.
8. Check:
   - oil seal
     Damage/wear → Replace the defective part(-s).

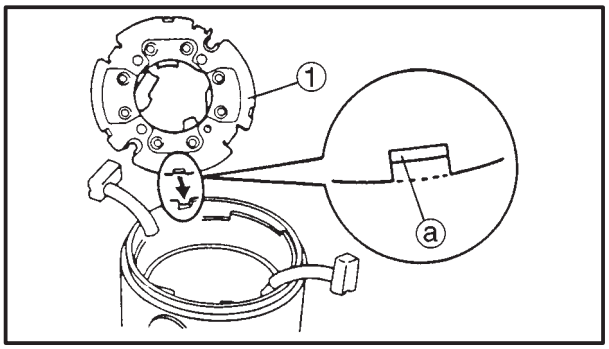

EAS00772

Assembling the starter motor

1. Install:
   - brush holder ①

NOTE:

Align the tab ⓐ on the brush holder with the slot in the starter motor rear cover.

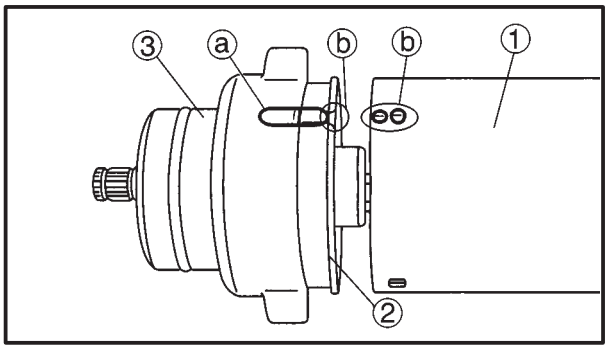

2. Install:
   - starter motor yoke ①
   - end bracket ②
   - starter motor front cover ③

NOTE:

Align the projection ⓐ on the front cover with the slot ⓑ on the end cover and starter motor yoke.

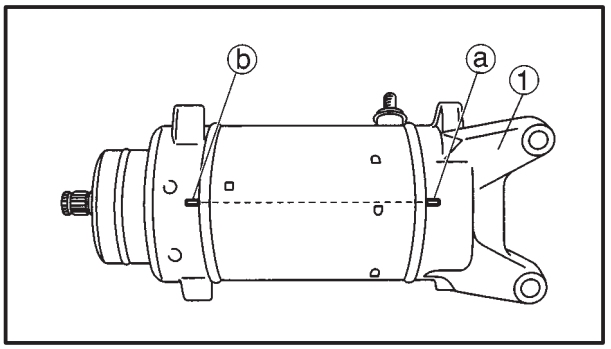

3. Install:
   - Starter motor rear cover ①

NOTE:

Align the match marks ⓐ on the rear cover with the match marks ⓑ on the front cover.

EB804000

CHARGING SYSTEM

CIRCUIT DIAGRAM

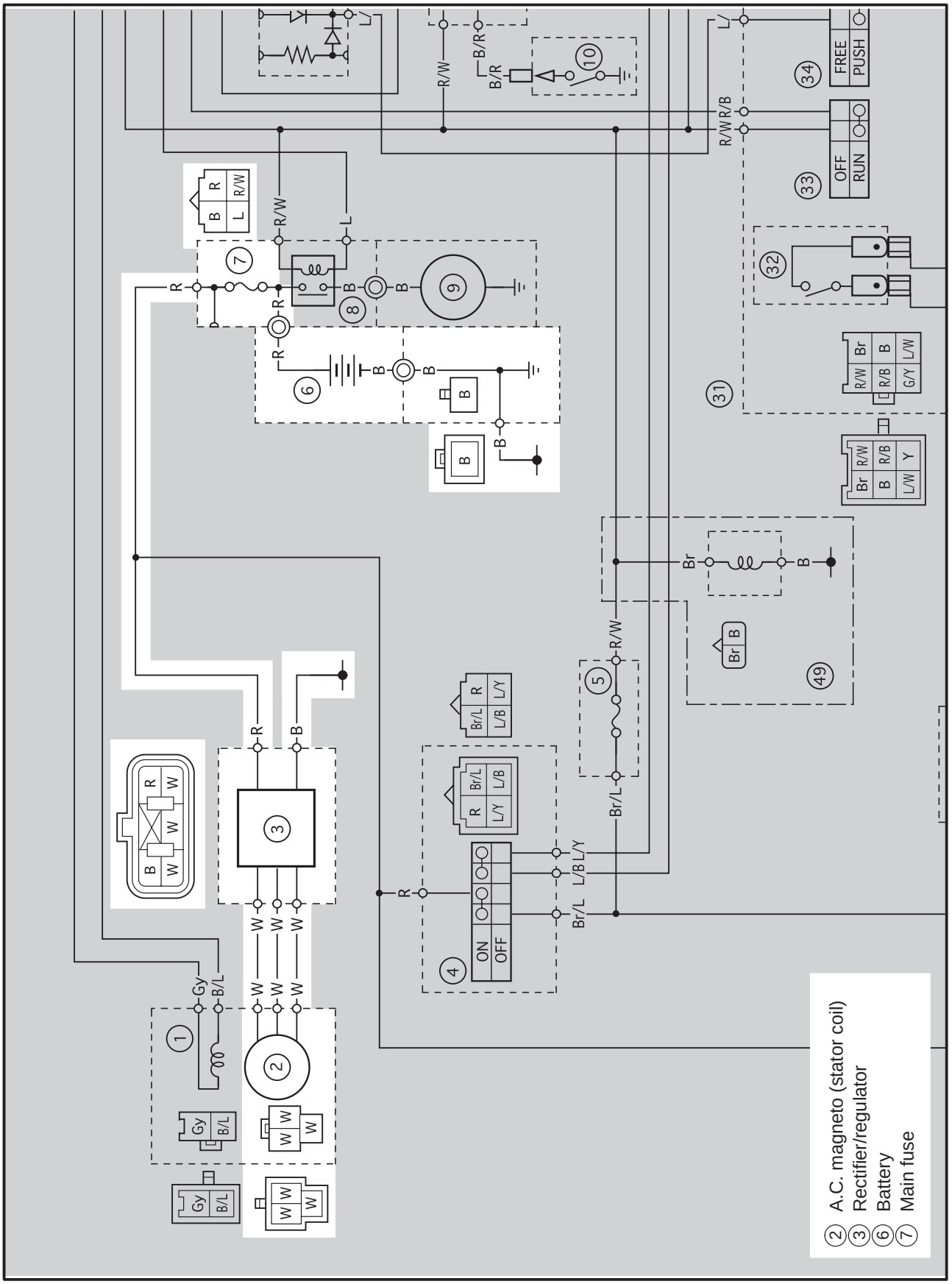

EAS00774

TROUBLESHOOTING

The battery is not being sharged.

Check:
1. main fuses
2. battery
3. charging voltage
4. startor coil assembly resistance
5. wiring
   (of the entire charging system)

NOTE:

° Before troubleshooting, remove the following part(-s):
1) battery cover
2) rider's seat
3) left side cover

° Troubleshoot with the following special tool(-s).

Engine tachometer
YU-08036-A, 90890-03113
Pocket tester
YU-03112, 90890-03112

EAS00738

1. Main fuse

° Check the main fuse for continuity.
Refer to "CHECKING THE FUSES" in chapter 3.
° Is the main fuse OK?

YES → NO → Replace the fuse.

EAS00739

2. Battery

° Check the condition of the battery.
Refer to "CHECKING AND CHARGING THE BATTERY" in chapter 3.

Open-circuit voltage
12.8 V or more at 20°C (68°F)

° Is the battery OK

YES → NO →
° Clean the battery terminals.
° Recharge or replace the battery.

EAS00775

3. Charging voltage

° Connect the engine tachometer to the spark plug lead of cylinder #1.
° Connect the pocket tester (DC 20 V) to the battery as shown.

Tester positive probe →
battery positive terminal
Tester negative probe →
battery negative terminal

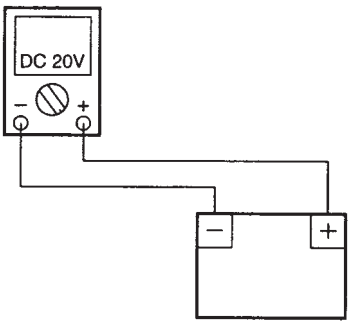

° Start the engine and let it run at approximately 5,000 r/min.
° Measure the charging voltage.

Charging voltage
14 V at 5,000 r/min

NOTE:

Make sure that the battery is fully charged.

° Is the charging voltage within specification?

NO → YES

The charging circuit is OK.

EAS00776

4. Stator coil assembly resistances

° Remove the generator cover.
° Connect the pocket tester (Ω √ 1) to the stator coil assembly coupler as shown.

Tester positive probe → white ①
Tester negative probe → white ②

Tester positive probe → white ①
Tester negative probe → white ③

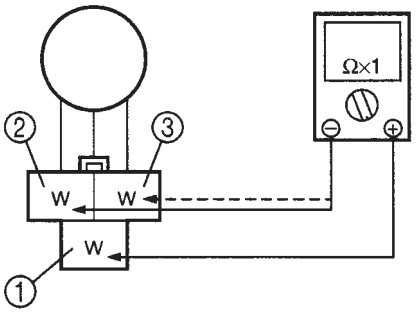

° Measure the stator coil assembly resistances.

Stator coil resistance
0.36 ~ 0.44 Ω at 20°C (68°F)

° Is the stator coil assembly OK?

YES → NO

Replace the stator coil assembly.

EAS00779

5. Wiring

° Check the wiring connections of the entire charging system.
Refer to "CIRCUIT DIAGRAM".
° Is the charging system's wiring properly conected and without defects?

NO → YES

Properly connect or repair the charging system's wiring.

Replace the rectifier/regulator.

EB805000

LIGHTING SYSTEM

CIRCUIT DIAGRAM

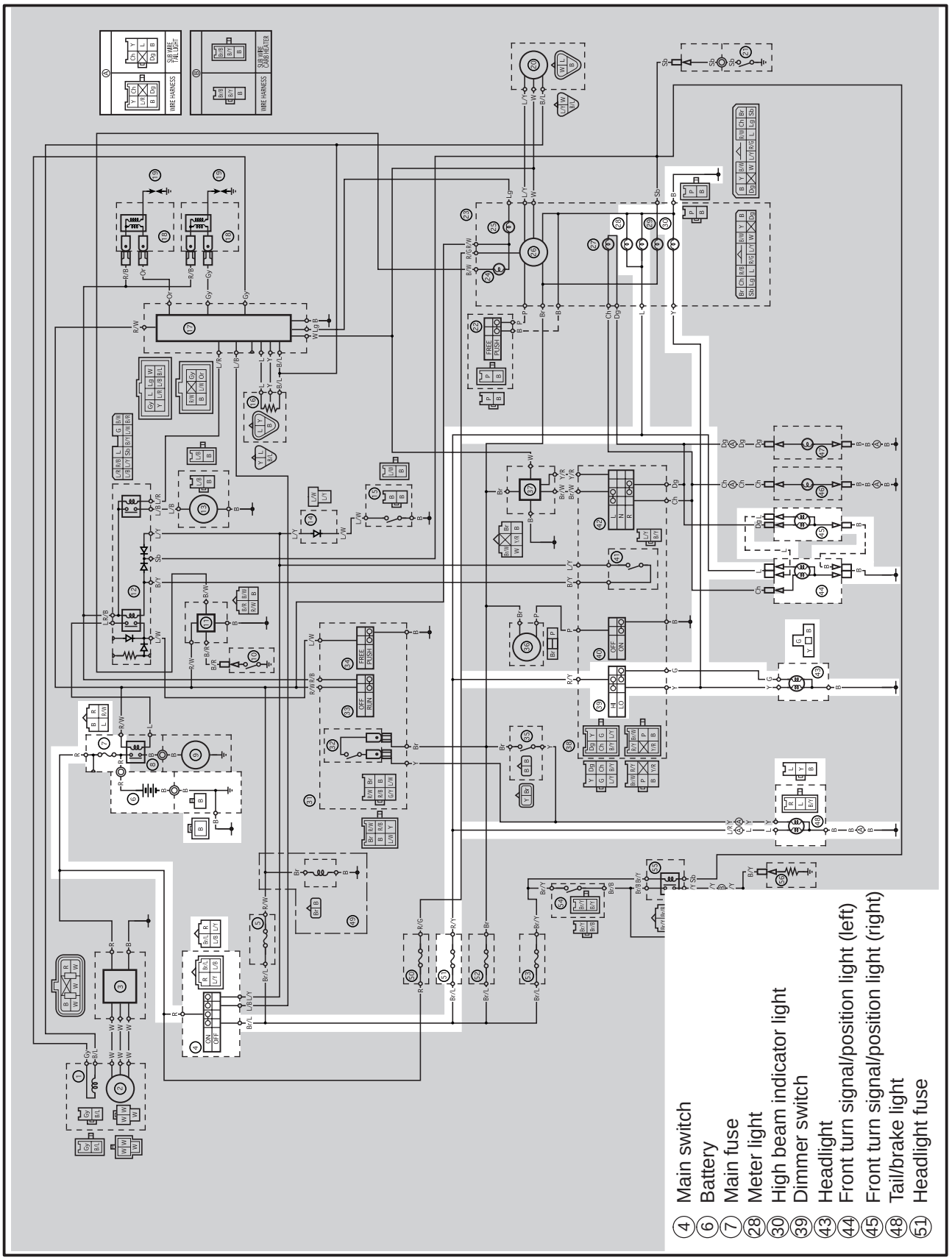

EAS00781

TROUBLESHOOTING

Any of the following fail to light: headlight, high beam indicator light, taillight or meter light.

Check:
1. main and headlight fuses
2. battery
3. main switch
4. dimmer switch
5. wiring
   (of the entire charging system)

NOTE:

° Before troubleshooting, remove the following part(-s).
1) battery cover
2) rider's seat
3) fuel tank
4) steering head side covers
5) headlight lens unit
6) tool box cover

° Troubleshoot with the following special tool(-s).

Pocket tester
YU-03112, 90890-03112

EAS00738

1. Main, and headlight fuses

° Check the main, and headlight fuses for continuity.
Refer to "CHECKING THE FUSES" in chapter 3.
° Are the main, and headlight fuses OK?

YES → NO → Replace the fuse(-s).

EAS00739

2. Battery

° Check the condition of the battery.
Refer to "CHECKING AND CHARGING THE BATTERY" in chapter 3.

Open-circuit voltage
12.8 V or more at 20°C (68°F)

° Is the battery OK?

YES → NO → ° Clean the battery terminals.
° Recharge or replace the battery.

EAS00749

3. Main switch

° Check the main switch for continuity.
Refer to "CHECKING THE SWITCHES".
° Is the main switch OK?

YES → NO → Replace the main switch.

EAS00784

4. Dimmer switch

° Check the dimmer switch for continuity.
Refer to "CHECKING THE SWITCHES".
° Is the dimmer switch OK?

YES → NO → The dimmer switch is faulty. Replace the left handlebar switch.

EAS00787

5. Wiring

- Check the entire lighting system's wiring. Refer to "CIRCUIT DIAGRAM".
- Is the lighting system's wiring properly connected and without defects?

YES → Check the condition of each of the lighting system's circuits. Refer to "CHECKING THE LIGHTING SYSTEM".

NO → Properly connect or repair the lighting system's wiring.

EAS00788

CHECKING THE LIGHTING SYSTEM

1. The headlight and the high beam indicator light fail to came on.

1. Headlight bulb and socket

- Check the headlight bulb and socket for continuity. Refer to "CHECKING THE BULBS AND BULB SOCKETS".
- Are the headlight bulb and socket OK?

YES →

NO → Replace the headlight bulb, socket or both.

2. Voltage

- Connect the pocket tester (DC 20 V) to the headlight and high beam indicator light couplers as shown.

A When the dimmer switch is set to "
B When the dimmer switch is set to "

Headlight
Tester positive probe → yellow ① or green ②
Tester negative probe → black ③
High beam indicator light
Tester positive probe → yellow ④
Tester negative probe → brack ⑤

Headlight coupler (wire harness side)

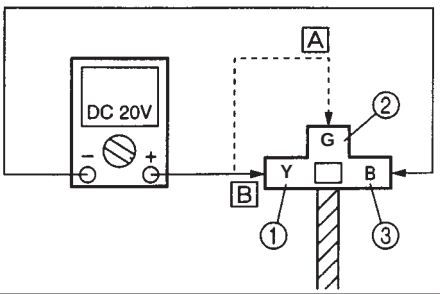

B

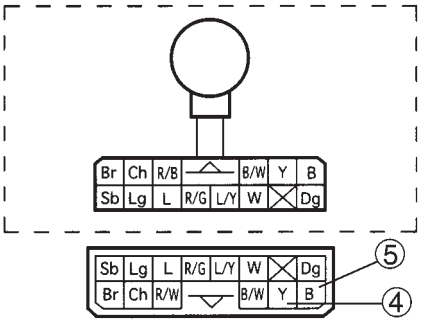

- Set the main switch to "ON".
- Set the light switch to " ☼ ".
- Set the dimmer switch to " ≡D " or " ≡D ".
- Measure the voltage (12 V) of yellow ① or green ② on the headlight coupler (headlight side).
- Measure the voltage (12 V) of yellow ④ on the meter assembly coupler.
- Is the voltage within specification?

YES → This circuit is OK.

NO → The wiring circuit from the main switch to the headlight coupler is faulty and must be repaired.

EAS00789

2. A meter light fails to come on.

1. Meter light bulb and socket.

- Check the meter light bulb and socket for continuity.
  Refer to "CHECKING THE BULBS AND BULB SOCKETS".
- Are the meter light bulb and socket OK?

YES

NO → Replace the meter light bulb, socket or both.

2. Voltage

- Connect the pocket tester (20 V) to the meter assembly coupler (wire harness side) as shown.

Tester positive probe → blue ①
Tester negative probe → black ②

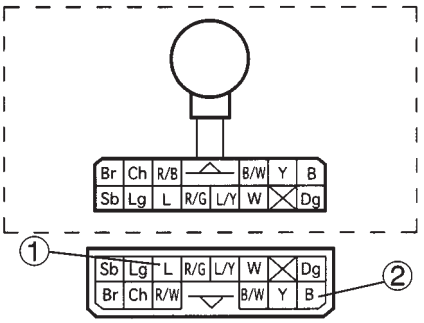

- Set the main switch to "ON".
- Set the light switch to " ≡D ⊂≡ " or " ☼ ".
- Measure the voltage (12 V) of blue ① on the meter assembly coupler (wire harness side).
- Is the voltage within specification?

YES → This circuit is OK.

NO → The wiring circuit from the main switch to the meter assembly coupler is faulty and must be repaired.

EAS00790

3. A tail/brake light fails to come on.

1. Tail/brake light bulb and socket

- Check the tail/brake light bulb and socket for continuity.
  Refer to "CHECKING THE BULBS AND BULB SOCKETS".
- Are the tail/brake light bulb and socket OK?

YES

NO → Replace the tail/brake lightbulb, socket or both.

2. Voltage

° Connect the pocket tester (DC 20 V) to the tail/brake light coupler (wire harness side) as shown.

Tester positive probe → blue ①
Tester negative probe → black ②

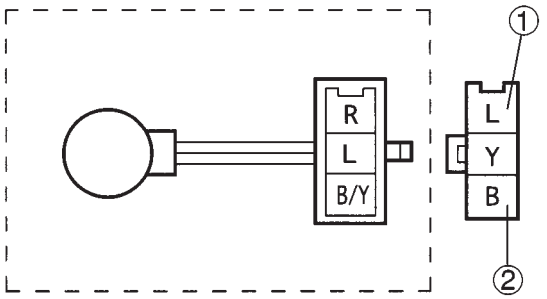

° Set the main switch to "ON"
° Set the light switch to " ≡D ◁≡ " or " ☼ ".
° Measure the voltage (12 V) of blue ① on the tail/brake light coupler (wire harness side).
° Is the voltage within specification?

YES → This circuit is OK.

NO → The wiring circuit from the main switch to the tail/brake light coupler is faulty and must be repaired.

2. Voltage

° Connect the pocket tester (DC 20 V) to the front turn signal/position light conectors (wire harness side) as shown.

Tester positive probe → blue ①
Tester negative probe → black ②

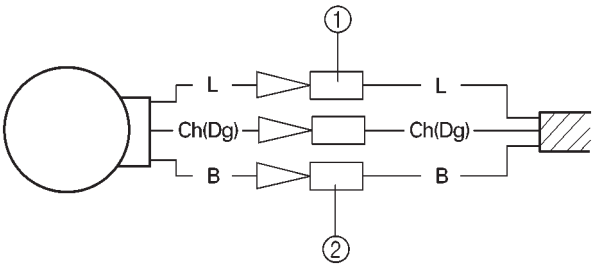

° Set the main switch to "ON"
° Measure the voltage (12 V) of blue ① on the front turn signal/position light connectors (wire harness side).
° Is the voltage within specification?

YES → This circuit is OK.

NO → The wiring circuit from the main switch to the front turn signal/position light connectors is faulty and must be repaired.

4. The front turn signal/position light fails to come on.

1. Front turn signal/position light bulb an socket

° Check the front turn signal/position light bulb and socket for continuity.
Refer to "CHECKING THE BULBS AND BULB SOCKETS".
° Are the front turn signal/position light bulb and socket OK?

YES

NO → Replace the front turn signal/position light bulb, socket or both.

EB806000

SIGNAL SYSTEM

CIRCUIT DIAGRAM

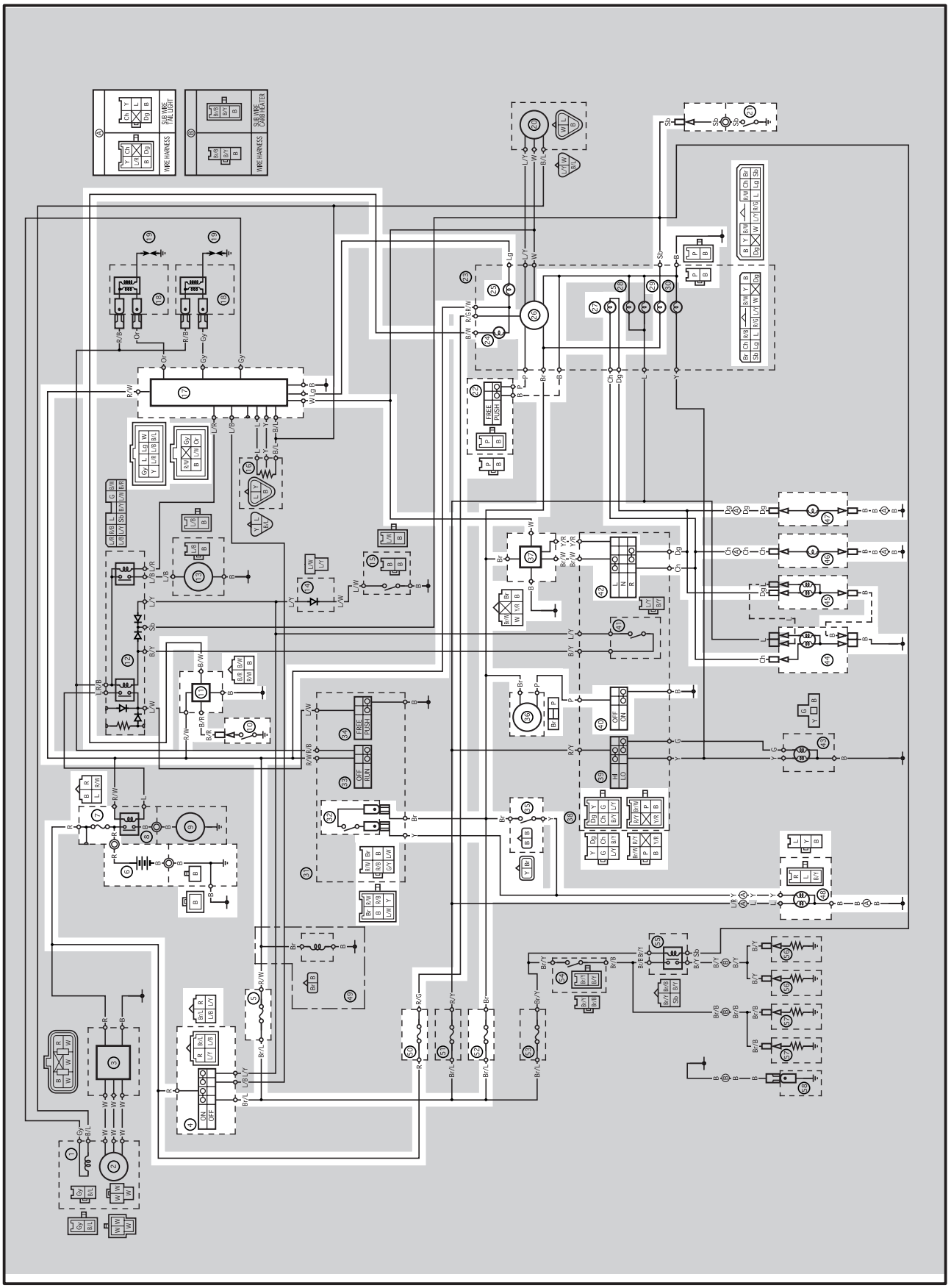

Signal system

④ Main switch
⑤ Ignition fuse
⑥ Battery
⑦ Main fuse
⑩ Oil level gauge
⑪ Oil lamp relay
⑰ Ignitor unit
㉑ Neutral switch
㉒ Trip switch
㉔ Oil level caution light
㉕ Engine warning light
㉖ Speedmeter
㉗ Turn signal indicator light
㉙ Neutral indicator light
㉜ Front brake switch
㉟ Rear brake switch
㊱ Horn
㊲ Flasher relay
㊵ Horn switch
㊷ Turn signal switch
㊹ Front turn signal/position light (left)
㊺ Front turn signal/position light (right)
㊻ Rear turn signal light (left)
㊼ Rear turn signal light (right)
㊽ Tail/brake light
㊿ Backup fuse
(52) Signal fuse

EB806010

TROUBLESHOOTING

- **Any of the following fail to light: turn signal light, brake light or an indicator light.**
- **The forn fails to sound.**

Check:
1. main and signaling system fuses
2. battery
3. main switch
4. wiring
   (of the entrire signaling system)

NOTE:
- Before troubleshooting, remove the following part(-s):
1) battery cover
2) rider's seat
3) fuel tank
4) steering head side covers
5) headlight lens unit
6) tool box cover
7) left side cover
- Troubleshoot with the following special tool(-s).

Pocket tester
YU-03112, 90890-03112

EAS00738

1. Main, ignition and signaling system fuses

- Check the main ignition and signaling system fuses for continuity.
  Refer to "CHECKING AND CHARGING THE FUSES" in chapter 3.
- Are the main ignition and signaling system fuses OK?

YES → NO → Replace the fuse(-s).

EAS00739

2. Battery

- Check the condition of the battery.
  Refer to "CHECKING THE BATTERY" in chapter 3.

Open-circuit voltage
12.8 V or more at 20°C (68°F)

- Is the battery OK?

YES → NO →
- Clean the battery terminals.
- Recharge or replace the battery.

EAS00749

3. Main switch

- Check the main switch for continuity.
  Refer to "CHECKING THE SWITCHES".
- Is the main switch OK?

YES → NO → Replace the main switch.

EAS00795

4. Wiring

- Check the entire signaling system's wiring.
  Refer to "CIRCUIT DIAGRAM".
- Is the signaling system's wiring properly connected and without defects?

YES → Check the condition of each of the signaling system's circuits. Refer to "CHECKING THE SIGNALING SYSTEM".

NO → Properly connect or repair the signaling system's wring.

EAS00796

CHECKING THE SIGNALING SYSTEM

1. The horn fails to sound.

1. Horn switch

- Check the forn switch for continuity. Refer to “CHECKING THE SWITCHES”.
- Is the horn switch OK?

YES ⇩ NO ⬇

Replace the left handlebar switch.

2. Voltage

- Connect the pocket tester (DC 20 V) to the horn connecter at the horn terminal as shown.

Tester positive probe → brown ①
Tester negative probe → ground

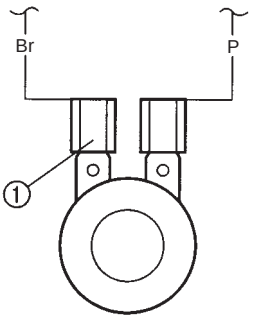

- Set the main switch to “ON”.
- Measure the voltage (12 V) of brown at the horn terminal.
- Is the voltage within specification?

YES ⇩ NO ⬇

The wiring circuit from the main switch to the horn connecter is faulty and must be repaired.

3. Horn

- Disconnect the pink connector at the horn terminal.
- Connect a jumper lead ① to the horn terminal and ground the jumper lead.
- Set the main switch to “ON”.
- Does the horn sound?

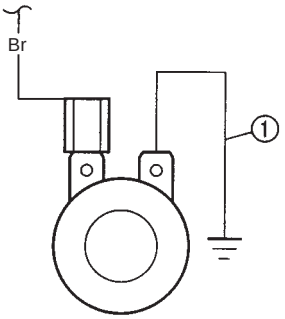

NO ⬇ YES ⇩

The horn is OK.

4. Voltage

- Connect the pocket tester (DC 20 V) to the horn connecter at the horn terminal as shown.

Tester positive probe → pink ①
Tester negative probe → ground

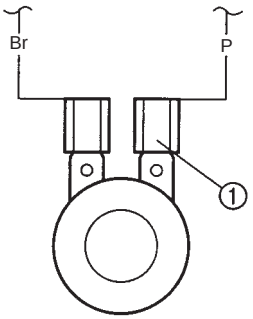

- Set the main switch to “ON”.
- Measure the voltage (12 V) of pink ① at the horn terminal.
- Is the voltage within specification?

YES ⇩ NO ⬇

Repair or replace the horn.

Replace the horn.

EAS00797

2. A tail/brake light fails to come on.

1. Tail/brake light bulb and socket

- Check the tail/brake light bulb and socket for continuity.
  Refer to “CHECKING THE BULBS AND BULB SOCKETS”.
- Are the tail/brake light bulb and socket OK?

YES → NO → Replace the tail/brake lightbulb, socket or both.

2. Brake light switches

- Check the brake light switches for continuity.
  Refer to “CHECKING THE SWITCHES”.
- Is the brake light switch OK?

YES → NO → Replace the brake light switch.

3. Voltage

- Connect the pocket tester (DC 20 V) to the tail/brake light coupler (wire harness side) as shown.

Tester positive probe → yellow ①
Tester negative probe → black ②

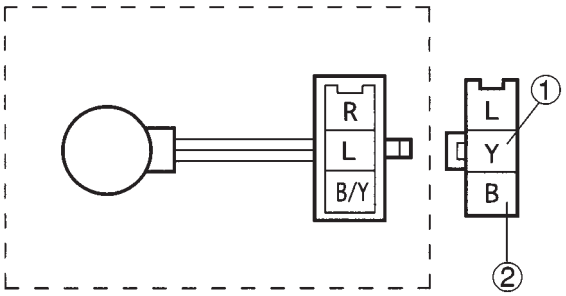

- Set the main switch to “ON”.
- Pull in the brake lever or push down on the brake pedal.
- Measure the voltage (12 V) of yellow at the tail/brake light coupler (wire harness side).
- Is the voltage within specification?

YES → This circuit is OK.

NO → The wiring circuit from the main switch to the tail/brake light coupler is faulty and must bne repaired.

EAS00799

3. A turn signal light, turn signal indicator light or both fail to blink.

1. Turn signal light bulb and socket

- Check the turn signal light bulb and socket for continuity.
  Refer to “CHECKING THE BULBS AND BULB SOCKETS”.
- Are the turn signal light bulb and socket OK?

YES → NO → Replace the turn signal light bulb, socket or both.

2. Turn signal indicator light bulb and socket

- Check the turn signal indicator light bulb and socket for continuity.
  Refer to “CHECKING THE BULBS AND BULB SOCKETS”.
- Is the turn signal indicator light bulb and socket OK?

YES → NO → Replace the turn signal indicator light bulb, socket or both.

3. Turn signal switch

° Check the turn signal for continuity.
Refer to “CHECKING THE SWITCHES”.
° Is the turn signal switch OK?

YES

NO

Replace the left handlebar switch.

4. Voltage

° Connect the pocket tester (DC 20 V) to the flasher relay coupler (wire harness side) as shown.

Tester positive prove → brown ①
Tester negative prove → ground

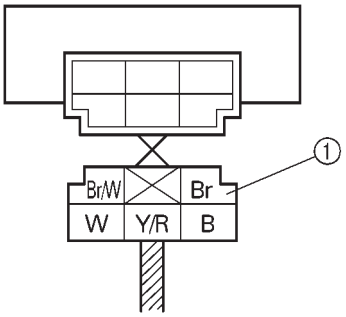

° Set the main switch to “ON”.
° Measure the voltage (12 V) of brown ① at the flasher relay coupler (wire harness side).
° Is the voltage within specification?

YES

NO

The wiring circuit from the main switch to the flasher relay coupler (flasher relay side) is faulty and must be repaired.

5. Voltage

° Connect the tester (DC 20 V) to the flasher relay coupler (wire harness side) as shown.

Tester positive probe → brown/white ①
Tester negative probe → ground

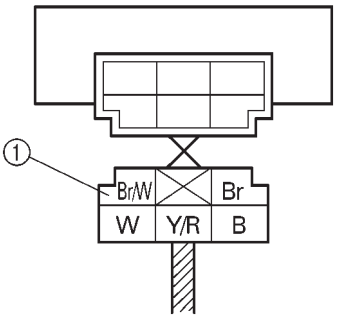

° Set the main switch to “ON”.
° Set the turn signal switch to “ ⇦ ” or “ ⇨ ”.
° Measure the voltage (12 V) or brown/white at the flasher relay coupler (wire harness side).
° Is the voltage within specification?

YES

NO

The flasher relay is faulty and must be replaced.

6. Voltage

° Connect the pocket tester (DC 20 V) to the turn signal light connectors or the meter assembly coupler (wire harness side) as shown.

A Turn signal light
B Turn signal indicator light

Left turn signal light
Tester positive probe → chocolate ①
Tester negative probe → ground
Right turn signal light
Tester positive probe → dark green ②
Tester negative probe → ground

A

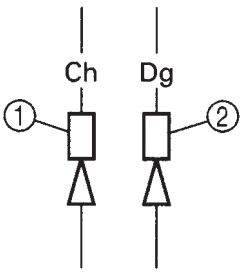

B

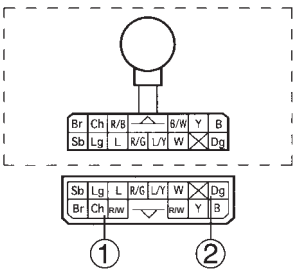

- Set the main switch to “ON”.
- Set the turn signal switch to “⇦” or “⇨”.
- Measure the voltage (12 V) of chocolate ① or dark green ② at the turn signal light connector (wire harness side).
- Is the voltage within specification?

YES → This circuit is OK.

NO → The wiring circuit from the turn signal switch to the turn signal light connector is faulty and must repaired.

EAS00800

4. The neutral indicator light fails to come on.

1. Neutral indicator light bulb and socket

- Check the neutral indicator light bulb and socket for continuity.
  Refer to “CHECKING THE BULBS AND BULB SOCKETS”.
- Are the neutral indicator light bulb and socket OK?

YES

NO → Replace the neutral indicator light bulb, socket or both.

2. Neutral switch

- Check the neutral switch for continuity.
  Refer to “CHECKING THE SWITCHES”.
- Is the neutral switch OK?

YES

NO → Replace the neutral switch.

3. Voltage

- Connect the pockt tester (DC 20 V) to the meter assembly coupler (wire harness side) as shwon.

Tester positive probe → brown ①
Tester negative probe → sky blue ②

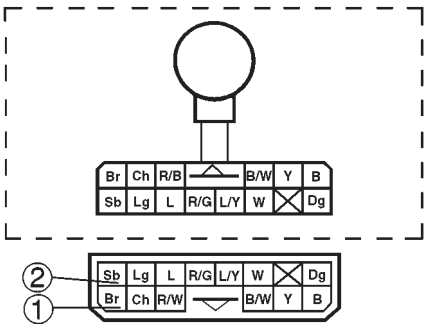

- Set the main switch to “ON”.
- Measure the voltage (12 V) of brown ① and sky blue ② at the meter assembly coupler.
- Is the voltage with specification?

YES → This circuit is OK.

NO → The wiring circuit from the main switch to the meter light bulb coupler is faulty and must be repaired.

EAS00802

5. The oil level caution light fails to come on.

1. Oil level warning light bulb and socket

- Check the oil level caution light bulb and socket for continuity.
  Refer to “CHECKING THE BULBS AND BULB SOCKETS”
- Are the oil level caution light bulb and socket OK?

YES

NO → Replace the oil level warning light bulb, socket or both.

2. Oil level switch

- Drain the engine oil and remove the oil level switch from the oil pan.
- Check the oil level switch for continuity. Refer to “CHECKING THE SWITCHES”.
- Is the oil level switch OK?

YES

NO

Replace the oil level switch.

3. Voltage

- Connect the pocket tester (DC 20 V) to the meter assembly coupler (wire harness side) as shown.

Tester positive probe → red/white ①
Tester negative probe → black/white ②

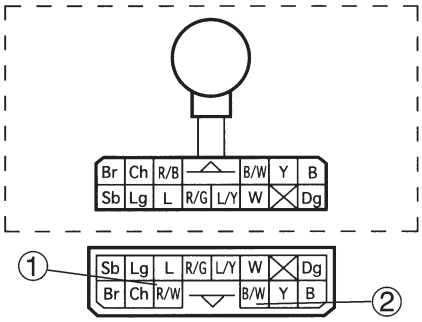

- Set the main switch to “ON”.
- Measure the voltage (12 V) of red/white ① and black/white ② at the meter assembly coupler.
- Is the voltage within specification?

YES

NO

The wiring circuit from the main switch to the meter assembly coupler is faulty and must be repaired.

4. Oil lamp relay

- Drain the engine oil and remove the oil level switch from the oil pan.
- Connect the oil level switch connectors to the wire harness and turn the oil level switch upside down.
- Turn the main switch to “ON”.
- The oil level warning light comes on for 1.5 seconds, and then goes off.
- Turn the oil level switch right side up.
- After approximately 45 seconds, the oil level warning light comes on.
- Is the oil level relay OK?

YES

This circuit is OK.

NO

Replace the oil lamp relay.

EB808000

FUEL PUMP SYSTEM

CIRCUIT DIAGRAM

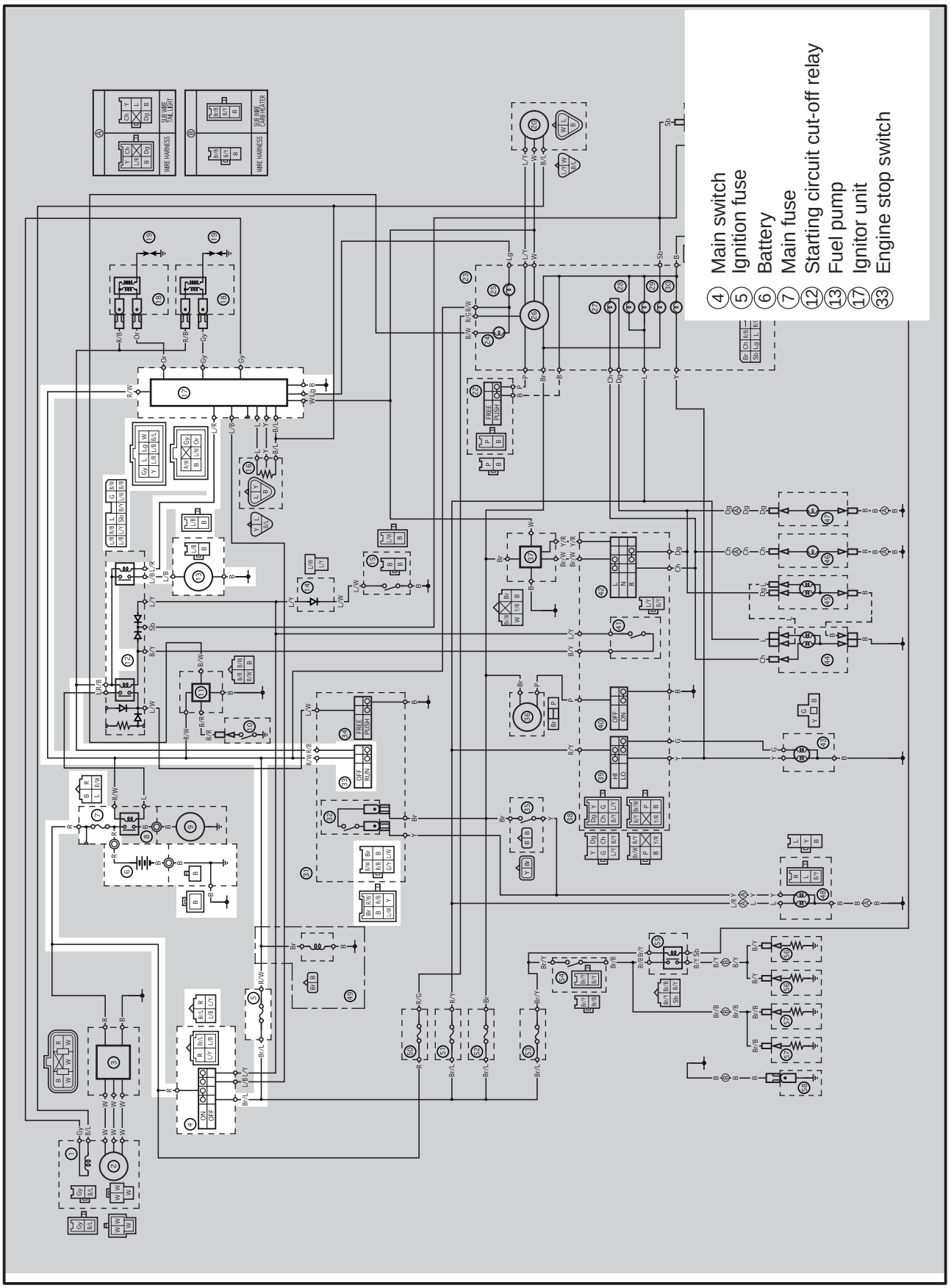

EB808010

FUEL PUMP CIRCUIT OPERATION

The fuel pump circuit consists of the fuel pump relay, fuel pump, engine stop switch and ignitor unit.
The ignitor unit includes the control unit for the fuel pump.

① Battery
② Main fuse
③ Main switch
④ Ignition fuse
⑤ Engine stop switch
⑥ Ignitor unit
⑦ Fuel pump relay
⑧ Fuel pump

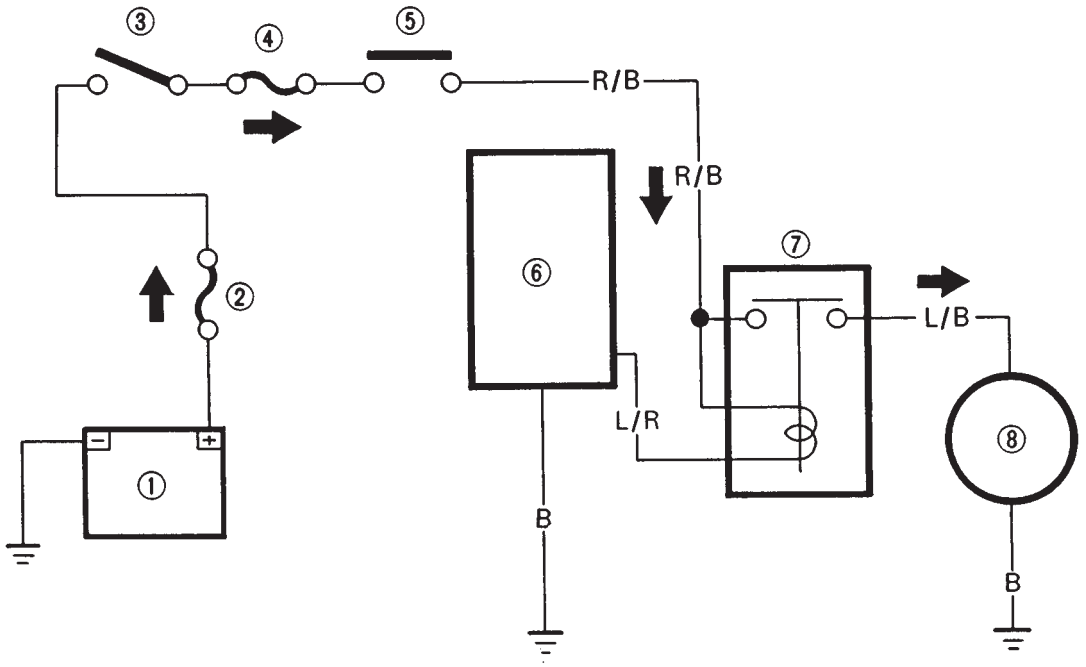

EAS00781

TROUBLESHOOTING

The fuel pump fails to operate.

Check:
1. main, and ignition fuses
2. battery
3. main switch
4. engine stop switch
5. starting circuit cutoff relay (fuel pump relay)
6. fuel pump
7. wiring
   (of the entire charging system)

NOTE:

° Before troubleshooting, remove the following part (-s):
1) battery cover
2) rider's seat
3) fuel tank
4) tool box cover
5) left side cover

° Troubleshoot with the following special tool (-s).

Pocket tester
YU-03112, 90890-03112

EAS00738

1. Main, and ignition fuses

° Check the main, and ignition fuses for continuity.
Reger to "CHECKING THE FUSES" in chapter 3.
° Are the main, and ignition fuses OK?

YES ⇩ NO ⇩

Replace the fuse(-s).

EAS00739

2. Battery

° Check the condition of the battery.
Refer to "CHECKING AND CHARGING THE BATTERY" in chapter 3.

Open-circuit voltage
12.8 V or more at 20°C (68°F)

° Is the battery OK?

YES ⇩ NO ⇩

° Clean the battery terminals.
° Recharge or replave the battery.

EAS00749

3. Main switch

° Check the main switch for continuity.
Refer to "CHECKING THE SWITCHES".
° Is the main switch OK?

YES ⇩ NO ⇩

Replace the main switch.

EAS00750

4. Engine stop switch

° Check the engine stop switch for continuity.
Refer to "CHECKING THE SWITCHES".
° Is the engine stop switch OK?

YES ⇩ NO ⇩

Replace the right handlebar switch.

EB803023

5. Starting circuit cutoff relay (fuel pump relay)

° Remove the relay unit from the wire harness.
° Connect the pocket tester (Ω √ 1) and battery (12 V) to the relay unit terminals.

Battery (+) terminal → red/black terminal ①
Battery (–) terminal → blue/red terminal ②

Tester (+) lead → red/black terminal ①
Tester (–) lead → blue/black terminal ③

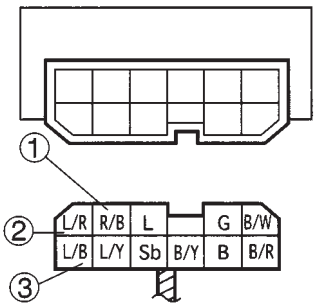

° Does the fuel pump relay have continuity batween red/black and blue/black?

YES → NO → Replace the starting circuit cutoff relay.

EB808021

6. Fuel pump resistance

° Disconnect the fuel pump coupler from the wire harness.
° Connect the pocket tester (Ω √ 1) to the fuel pump coupler terminals.

Tester (+) lead → blue/black terminal ①
Tester (–) lead → black terminal ②

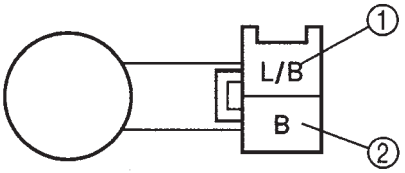

° Measure the fuel pump resistance.

Fuel pump resistance:
1.6 ~ 2.2 Ω at 20°C (68°F)

° Is the fuel pump OK?

YES → NO → Replace the fuel pump.

7. Wiring

° Check the entire fuel pump system's wiring. Refer to "CIRCUIT DIAGRAM".
° Is the fuel pump system's wiring properly connected and without defects?

NO → Properly connect or repair the fuel pump system's wiring.

YES → Replace the ignitor unit.

EB808030

FUEL PUMP TEST

WARNING

Gasoline is extremely flammable and under certain circumstances there can be a danger of an explosion or combustion. Be extremely careful and note the following points:
- **Stop the engine before refuelling.**
- **Do not smoke and keep away from open flames, sparks, or any other source of fire.**
- **Take care not to spill gasoline. If you do accidentally spill some, wipe it up immediately with dry rags.**
- **If gasoline touches the engine when the engine is still hot, there is a danger of combustion. Make sure that the engine is completely cool before performing the following test.**

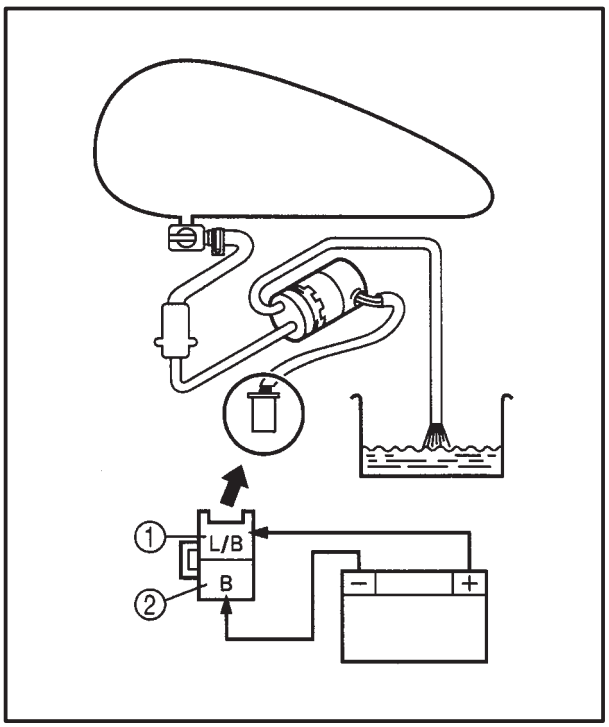

1. Check:
   - Fuel pump operation

▼▼▼▼▼▼▼▼▼▼▼▼▼▼▼▼▼▼▼▼▼▼▼▼▼▼▼▼▼▼▼▼

a. Fill up the fuel tank.
b. Put the end of the fuel hose into an open container.
c. Connect the battery (12 V) to the fuel pump coupler terminals.

Battery (+) lead → blue/black terminal ① **Battery (–) lead → black terminal ②**

d. If fuel flows out from the fuel hose, the fuel pump is good. If not, replace the fuel pump assembly.

▲▲▲▲▲▲▲▲▲▲▲▲▲▲▲▲▲▲▲▲▲▲▲▲▲▲▲▲▲▲▲▲

CARBURETOR HEATER SYSTEM

CIRCUIT DIAGRAM

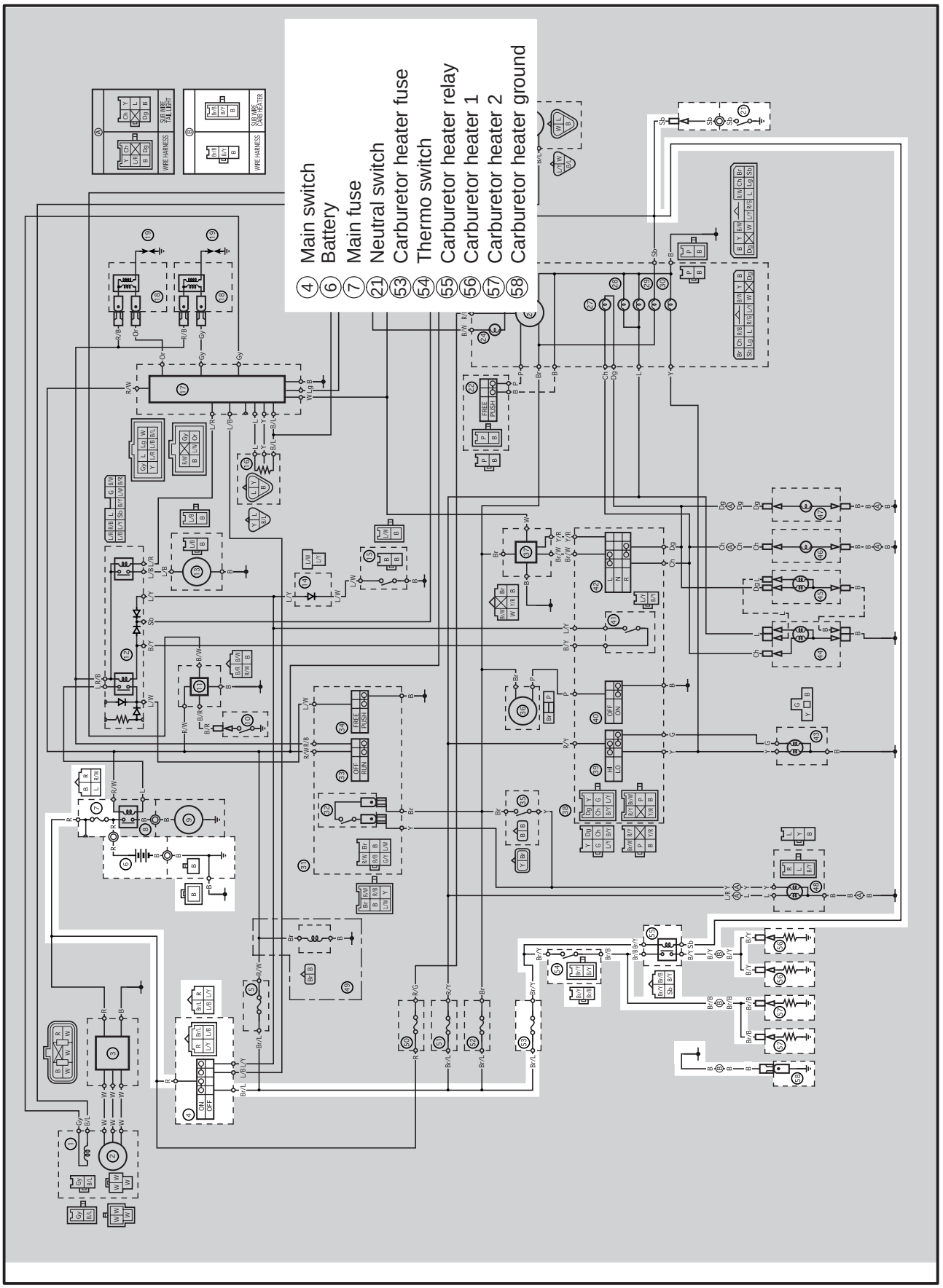

EAS00781

TROUBLESHOOTING

The carburetor heater fails to operate.

Check:
1. main, and carburetor heater
2. battery
3. main switch
4. neatral switch
5. carburetor heater relay
6. thermo
7. carburetor heater
8. wiring
   (of the entire charging system)

NOTE:

° Before troubleshooting, remove the following part (-s):
1) battery cover
2) rider's seat
3) fuel tank
4) steering head side covers
5) tool box cover

° Troubleshoot with the following special tool (-s).

Pocket tester
YU-03112, 90890-03112

EAS00738

1. Main, and carburetor heater fuses

° Check the main, and carburetor heater fuses for continuity.
Refer to "CHECKING THE FUSES" in chapter 3.
° Are the main, and carburetor heater fuses OK?

YES → NO → Replace the fuse(-s).

EAS00739

2. Battery

° Check the condition of the battery.
Refer to "CHECKING AND CHARGING THE BATTERY" in chapter 3.

Open-circuit voltage
12.8 V or more at 20°C (68°F)

° Is the battery OK?

YES → NO → ° Clean the battery terminals.
° Recharge or replace the battery.

EAS00749

3. Main switch

° Check the main switch for continuity.
Refer to "CHECKING THE SWITCHES".
° Is the main switch OK?

YES → NO → Replace the main switch.

EAS00751

4. Neutral switch

° Check the neutral switch for continuity.
Refer to "CHECKING THE SWITCHES".
° Is the neutral switch OK?

YES → NO → Replace the neutral switch.

5. Carburetor heater relay

° Remove the carburetor heater relay from the wire harness.
° Connect the pocket tester (Ω √ 1) and battery (12 V) to the carburetor heater relay terminals.

Battery (+) terminal → brown/yellow ①
Battery (–) terminal → sky blue ②

Tester (+) lead → brown/black ③
Tester (–) lead → black/yellow ④

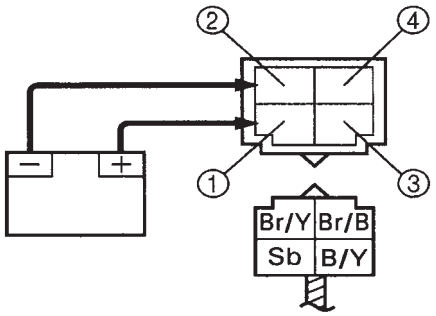

° Does the carburetor heater relay have continuity between brown/black and black/yellow?

YES → NO

Replace the carburetor heater relay.

6. Thermo switch

° Remove the thermo switch from the thermo switch plate.
° Connect the pocket tester to the thermo switch lead.

Tester (+) lead → brown/yellow ①
Tester (–) lead → black/yellow ②

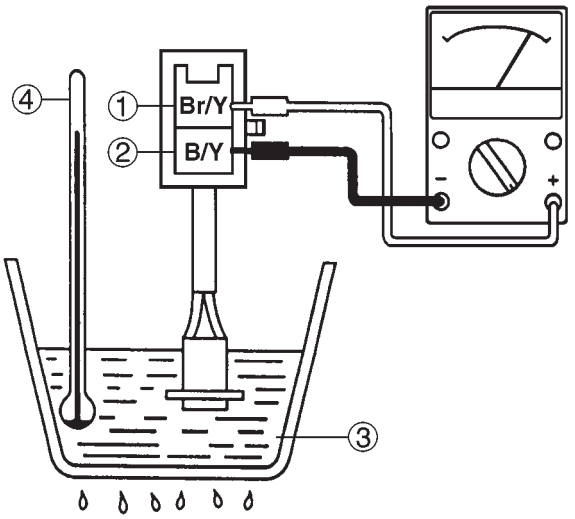

° Immerse the thermo switch in the water ③.
° Check the thermo switch for continuity.
Note the temperatures while heating the water with the temperature gauge ④.

Test step	Water temperature	Good condition
1	Less than 23 ± 3°C (73.4 ± 5.4°F)	○
2	More than 23 ± 3°C (73.4 ± 5.4°F)	√
3	More than 12 ± 4°C (53.6 ± 7.2°F)	√
4	Less than 12 ± 4°C (53.6 ± 7.2°F)	○

Test 1 & 2 : Heat-up test
Test 3 & 4 : Cool-down test
○ : Continuity √ : No continuity

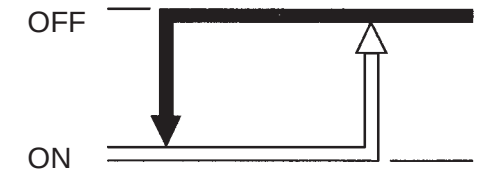

Thermoswitch 12 ± 4°C (53.6 ± 7.2°F)
Thermoswitch 23 ± 3°C (73.4 ± 5.4°F)

° Is the thermo switch OK?

YES → NO

Replace the thermo switch.

7. Carburetor heater

° Remove the carburetor heater from the carburetor body.
° Connect the pocket tester to the carburetor heater.

Tester (+) lead → Heater terminal ①
Tester (–) lead → Heater body ②

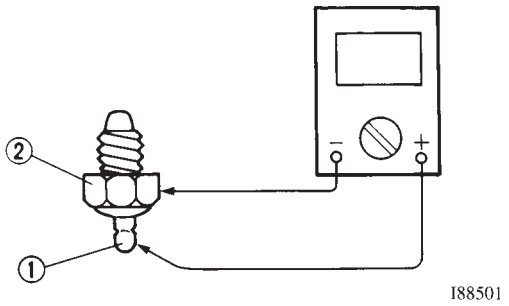

° Measure the heater resistance.

Carburetor heater resistance:
12 V 30 W : 6 ~ 10 Ω at 20 °C (68 °F)

° Is the carburetor heater OK?

YES → Replace the carburetor heater.

NO → Replace the carburetor heater.

EAS00766

8. Wiring

° Check the entire carburetor heater system's wiring.
Refer to "CIRCUIT DIAGRAM".
° Is the carburetor heater system's wiring properly connected and without defects?

NO → Properly connect or repair the carburetor heater system's wiring.

YES → The carburetor heater system circuit is OK.

TROUBLESHOOTING

The solenoid valve fails to operate.

Check:
1. main, and ignition fuses
2. battery
3. main switch
4. solenoid valve
5. wiring
   (of the evaporative emission control system)

NOTE:

° Before troubleshooting, remove the following part(-s):
1) tool box cover
2) left side cover

° Troubleshoot with the following special tool(-s).

Pocket tester
YU-03112, 90890-03112

1. Solenoid valve

CIRCUIT DIAGRAM

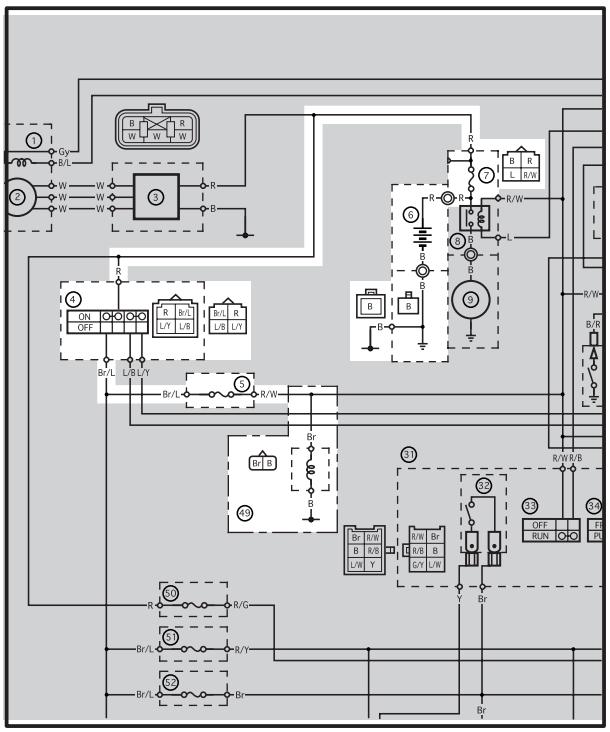

④ Main switch
⑤ Ignition fuse
⑥ Battery
⑦ Main fuse
㊾ Solenoid valve

FAS00738

1. Main and ignition fuses

° Check the main and ignition fuses for continuity.
Refer to "CHECKING THE FUSES" in chapter 3.
° Are the main and ignition fuses OK?

YES ⇩ NO ⇩

Replace the fuse (-s).

2. Battery

° Check the condition of the battery.
Refer to "CHECKING AND CHARGING THE BATTERY" in chapter 3.

Open-circuit voltage
12.8 V or more at 20 C (68 F)

° Is the battery OK?

YES ⇩ NO ⇩

° Clean the battery terminals.
° Recharge or replace the battery.

EAS00749

3. Main switch

° Check the main switch for continuity.
Refer to "CHECKING THE SWITCHES".
° Is the main switch OK?

YES ⇩ NO ⇩

Replace the main switch.

4. Solenoid valve resistance

° Disconnect the solenoid valve coupler from wireharness.
° Connect the pocket tester (Ω √ 1) to the solenoid valve coupler terminals.

Tester (+) lead → brown terminal ①
Tester (–) lead → black terminal ②

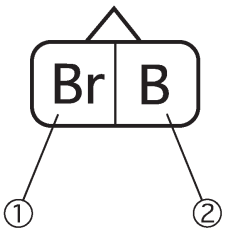

° Measure the solenoid valve resistance

Solenoid valve resistance:
28 ~ 34 Ω at 20°C (68°F)

° Is the solenoid valve OK?

YES → NO

Replace the solenoid valve.

5. Wiring

° Check the entire evaporative emission control system's wiring.
Refer to "CIRCUIT DIAGRAM"
° Is the evaporative emission control system's wiring properly connected and without defects?

NO → Properly connect or repair the evaporative emission control system's wiring.

YES → Replace the solenoid valve.

SELF-DIAGNOSIS

The XVS1100L, XVS1100LC features self-diagnosis.
When the main switch is turned to “ON”, the following items are monitored and the condition codes are displayed on the engine indicator light (irrespective of whether the engine is running or not).

NOTE:

The XVS1100L, XVS1100LC features a self-diagnosing system.
In the XVS1100L, XVS1100LC, when the main switch is turned on the “Engine indicator light” in the speedometer comes on for 1.4 seconds then goes off. However, if there is a malfunction, it comes on for 1.4 seconds, goes off and then begins flashing. (However, it is on while the engine is running.)

Item	Condition	Response	Display condition code	
			When engine is stationary	When engine is running
Throttle position sensor (TPS)	Disconnected Short-circuit Locked	°Enables the motorcycle to run so that the ignition timing is fixed when the throttle is fully opened. °Displays the condition code on the engine indicator light.	Blinks in Fault code: 3	Light on
Speed sensor	Disconnected short-circuit	°Displays the condition code on the enigne indicator light.	Blinks in Fault code: 4	Light on

Display order on the engine indicator light

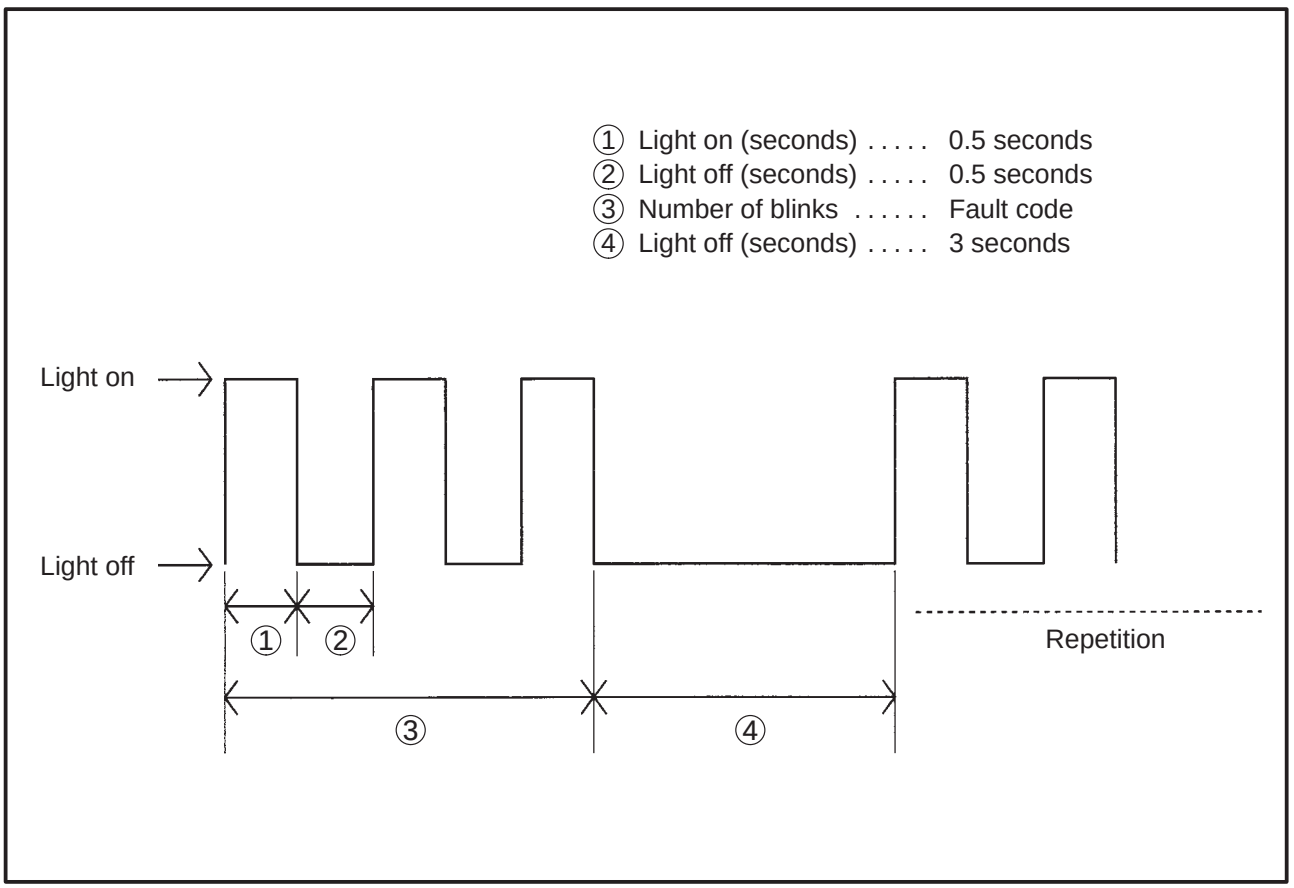

EAS00835

TROUBLESHOOTING

The engine warning light starts to display the self-diagnosis sequence.

Check:
1. throttle position sensor
2. speed sensor

NOTE:

° Before troubleshooting, remove the following part(-s):
1) rider seat
2) fuel tank
3) air filter case
4) left side cover

° Troubleshoot with the following special tool(-s).

Pocket tester
YU-03112, 90890-03112

EAS00836

1. Throttle position sensor

CIRCUIT DIAGRAM

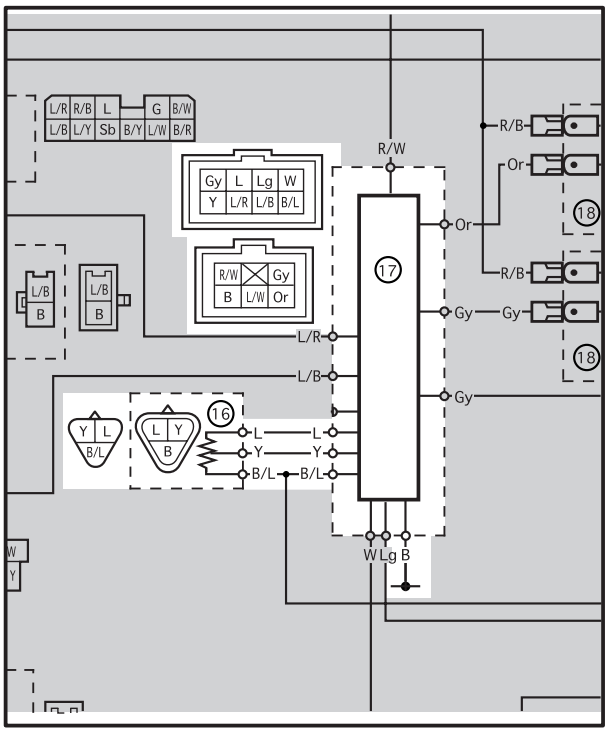

⑯ Throttle position sensor
⑰ Ignitor unit

1. Wire harness

° Check the wire harness for continuity.
Refer to “CIRCUIT DIAGRAM”.
° Is the wire harness OK?

YES ⇩ | NO ⇩

Repair or replace the wire harness.

EB812401

2. Throttle position sensor

° Check the throttle position sensor for continuity.
Refer to “CHECKING AND ADJUSTING THE THROTTLE POSITION SENSOR” in chapter 6.
° Is the throttle position sensor OK?

YES ⇩ | NO ⇩

Replace the ignitor unit.

Replace the throttle position sensor.

2. Speed sensor

CIRCUIT DIAGRAM

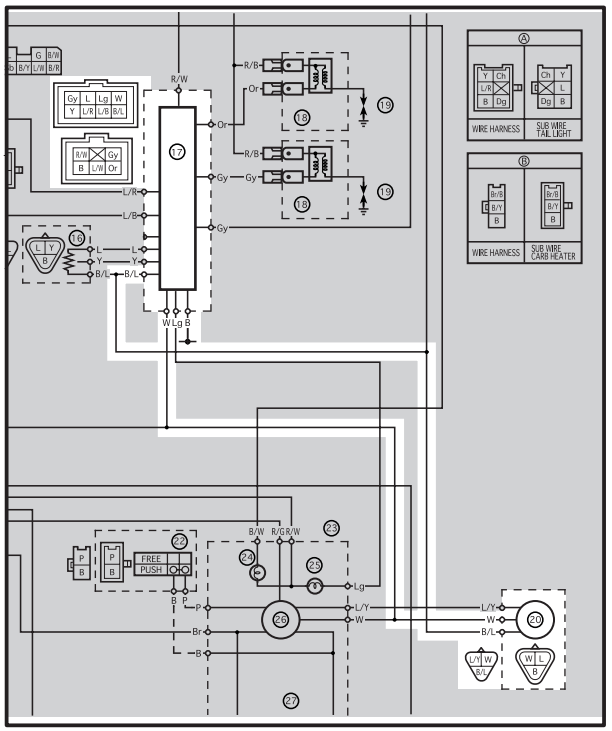

⑰ Ignitor unit
⑳ Speed sensor

1. Wire harness
°Check the wire harness for continuity. Refer to “CIRCUIT DIAGRAM”. °Is the wire harness OK?

YES

NO

Repair or replace the wire harness.

2. Speed sensor
°Place the motorcycle on a suitable stand so that the rear wheel is elevated. °Connect the pocket tester (DC 20 V) to the speed sensor connector.
Tester (+) lead → white terminal ① **Tester (–) lead → body earth**

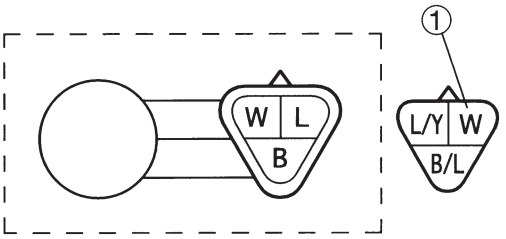

°Set the main switch to “ON”.
°Turn the rear wheel slowly.
°Check the tester voltage (0 V - 5 V - 0 V).
°Is the speed sensor OK?

YES

Replace the ignitor unit.

NO

Replace the speed sensor.

CHAPTER 8.
TROUBLESHOOTING

STARTING FAILURE/HARD STARTING 8-1
FUEL SYSTEM 8-1
ELECTRICAL SYSTEM 8-1
COMPRESSION SYSTEM 8-2

POOR IDLE SPEED PERFORMANCE 8-2
POOR IDLE SPEED PERFORMANCE 8-2

POOR MEDIUM-AND-HIGH SPEED PERFORMANCE 8-2
POOR MEDIUM-AND-HIGH SPEED PERFORMANCE 8-2

FAULTY GEAR SHIFTING 8-3
HARD SHIFTING 8-3
SHIFT PEDAL DOES NOT MOVE 8-3
JUMPS-OUT-OF GEAR 8-3

CLUTCH SLIPPING/DRAGGING 8-3
CLUTCH SLIPPING 8-3
CLUTCH DRAGGING 8-3

OVERHEATING 8-4
OVERHEATING 8-4

FAULTY BRAKE 8-4
POOR BRAKING PERFORMANCE 8-4

FRONT FORK OIL LEAKAGE AND FRONT FORK MALFUNCTION . 8-4
MALFUNCTION 8-4
OIL LEAKAGE 8-4

UNSTABLE HANDLING 8-5
UNSTABLE HANDLING 8-5

FAULTY LIGHTING AND SIGNAL SYSTEMS 8-5
HEADLIGHT DOES NOT LIGHT 8-5
BULB BURNT OUT 8-5
FLASHER DOES NOT LIGHT 8-5
FLASHER BLINKS SLOWLY 8-5
FLASHER REMAINS LIT 8-5
FLASHER BLILNKS QUICKLY 8-5
HORN DOES NOT SOUND 8-5

EB900000

TROUBLESHOOTING

NOTE:

The following guide for troubleshooting does not cover all the possible causes of problems.
It should be helpful, however, as a guide to troubleshooting. Refer to the relative procedure in this manual for inspection, adjustment and replacement of parts.

STARTING FAILURE/HARD STARTING

FUEL SYSTEM

Fuel tank
- Empty
- Clogged fuel filter
- Clogged fuel strainer
- Clogged fuel tank drain hose
- Clogged roll-over valve
- Clogged roll-over valve breather hose
- Deteriorated or contaminated fuel

Fuel cock
- Clogged fuel hose

Carburetor
- Deteriorated or contaminated fuel
- Clogged pilot jet
- Clogged pilot air passage
- Sucked-in air
- Deformed float
- Worn needle valve
- Improperly sealed valve seat
- Improperly adjusted fuel level
- Improperly set pilot jet
- Clogged starter jet
- Faulty starter plunger
- Improperly adjusted starter cable

Air filter
- Clogged air filter element

Fuel pump
- Faulty fuel pump
- Faulty relay unit (fuel pump relay)

ELECTRICAL SYSTEM

Spark plug
- Improper plug gap
- Worn electrodes
- Wire between terminals severed
- Improper heat range
- Faulty spark plug cap

Ignition coil
- Broken or shorted primary/secondary
- Faulty spark plug lead
- Broken body

Full-transistor system
- Faulty ignitor unit
- Faulty pickup coil

Switch and wiring
- Faulty main switch
- Faulty engine stop switch
- Broken or shorted wiring
- Faulty neutral switch
- Faulty start switch
- Faulty sidestand switch
- Faulty clutch switch

Starter motor
- Faulty starter motor
- Faulty starter relay
- Faulty relay unit (starting circuit cut-off relay)
- Faulty starter clutch

COMPRESSION SYSTEM

Cylinder and cylinder head

- Loose spark plug
- Loose cylinder head or cylinder
- Faulty cylinder head gasket
- Worn, damaged or seized cylinder
- Improperly sealed valve
- Improper valve-to-valve seat contact
- Improper valve timing
- Faulty valve spring

Piston and piston ring

- Improperly installed piston ring
- Worn, fatigued or broken piston ring
- Seized piston ring
- Seized or damaged piston

Crankcase and crankshaft

- Improperly seated crankcase
- Seized crankshaft

EB901000

POOR IDLE SPEED PERFORMANCE

POOR IDLE SPEED PERFORMANCE

Carburetor

- Improperly returned starter plunger
- Loose pilot jet
- Clogged pilot air jet
- Improperly synchronized carburetors
- Improperly adjusted idle speed (throttle stop screw)
- Improper throttle cable free play
- Flooded carburetor

Electrical system

- Faulty battery
- Faulty spark plug
- Faulty ignitor unit
- Faulty pickup coil
- Faulty ignition coil

Valve train

- Improperly adjusted valve clearance

Air filter

- Clogged air filter element

EB902000

POOR MEDIUM-AND-HIGH SPEED PERFORMANCE

POOR MEDIUM-AND-HIGH SPEED PERFORMANCE

Refer to “STARTING FAILURE/HARD STARTING”. (Fuel system, electrical system, compression system and valve train)

Carburetor

- Faulty diaphragm
- Improperly adjusted fuel level
- Clogged or loose main jet

Air filter

- Clogged air filter element

Fuel pump

- Faulty fuel pump

EB903000

FAULTY GEAR SHIFTING

HARD SHIFTING

Refer to “CLUTCH DRAGGING”.

SHIFT PEDAL DOES NOT MOVE

Shift shaft
- Improperly adjusted shift pedal link
- Bent shift shaft

Shift cam, shift fork
- Groove jammed with impurities
- Seized shift fork
- Bent shift fork guide bar

Transmission
- Seized transmission gear
- Jammed impurities
- Incorrectly assembled transmission

JUMPS-OUT-OF GEAR

Shift shaft
- Improperly adjusted shift lever position
- Improperly returned stopper lever

Shift fork
- Worn shift fork

Shift cam
- Improper thrust play
- Worn shift cam groove

Transmission
- Worn gear dog

EB904000

CLUTCH SLIPPING/DRAGGING

CLUTCH SLIPPING

Clutch
- Improperly adjusted clutch cable
- Loose clutch spring
- Fatigued clutch spring
- Worn friction plate/clutch plate
- Incorrectly assembled clutch

Engine oil
- Improper oil level
- Improper viscosity (low)
- Deterioration

CLUTCH DRAGGING

Clutch
- Warped pressure plate
- Unevenly tensioned clutch springs
- Bent push rod
- Broken clutch boss
- Burnt primary driven gear bushing
- Bent clutch plate
- Swollen friction plate
- Match marks not aligned

Engine oil
- Improper oil level
- Improper viscosity (high)
- Deterioration

EB905000

OVERHEATING

OVERHEATING

Ignition system

- Improper spark plug gap
- Improper spark plug heat range
- Faulty ignitor unit

Fuel system

- Improper carburetor main jet setting
- Improper fuel level
- Clogged air filter element

Compression system

- Heavy carbon build-up

Engine oil

- Improper oil level
- Improper oil viscosity
- Inferior oil quality

Brake

- Brake drag

EB906001

FAULTY BRAKE

POOR BRAKING PERFORMANCE

Disc brake

- Worn brake pad
- Worn disc
- Air in brake fluid
- Leaking brake fluid
- Faulty cylinder kit cup
- Faulty caliper kit seal
- Loose union bolt
- Broken brake hose
- Oily or greasy disc/brake pad
- Incorrect brake fluid level

EB907000

FRONT FORK OIL LEAKAGE AND FRONT FORK MALFUNCTION

MALFUNCTION

- Bent, deformed or damaged inner tube
- Bent or deformed outer tube
- Damaged fork spring
- Worn or damaged slide metal
- Bent or damaged damper rod
- Improper oil viscosity
- Improper oil level

OIL LEAKAGE

- Bent, damaged or rusty inner tube
- Damaged or cracked outer tube
- Damaged oil seal lip
- Improperly installed oil seal
- Improper oil level (too high)
- Loose damper rod holding bolt
- Broken cap bolt O-ring
- Loose drain bolt
- Damaged drain bolt gasket

EB908000

UNSTABLE HANDLING

UNSTABLE HANDLING

Handlebar
- Improperly installed or bent

Steering
- Improperly installed handlebar crown
- Bent steering stem
- Improperly installed steering shaft (improperly tightened ring nut)
- Damaged ball bearing or bearing race

Swingarm
- Worn bearing or bushing
- Bent or damaged

Rear Shock absorber
- Faulty spring
- Oil and gas leakage

Tire
- Uneven tire pressures on both sides
- Incorrect tire pressure
- Uneven tire wear

Front fork
- Uneven oil levels on both sides
- Uneven spring tension (uneven damping force adjuster position)
- Broken spring
- Twisted front fork

Wheel
- Incorrect wheel balance
- Deformed cast wheel
- Damaged bearing
- Bent or loose wheel axle
- Excessive wheel runout
- Loosed spoke

Frame
- Bent
- Damaged steering head tube
- Improperly installed bearing race

EB909000

FAULTY LIGHTING AND SIGNAL SYSTEMS

HEADLIGHT DOES NOT LIGHT
- Improper bulb
- Too many electric accessories
- Hard charging (broken stator coil wire, faulty rectifier/regulator)
- Incorrect connection
- Improperly grounded
- Poor contacts (main switch)
- Bulb life expired

BULB BURNT OUT
- Improper bulb
- Faulty battery
- Faulty rectifier/regulator
- Improperly grounded
- Faulty main switch
- Bulb life expired

FLASHER DOES NOT LIGHT
- Improperly grounded
- Discharged battery
- Faulty turn switch
- Faulty flasher relay
- Faulty wire harness
- Loosely connected coupler
- Burnt-out bulb
- Faulty fuse

FLASHER BLINKS SLOWLY
- Faulty flasher relay
- Faulty main and/or turn switch
- Improper bulb

FLASHER REMAINS LIT
- Faulty flasher relay
- Burnt-out bulb

FLASHER BLINKS QUICKLY
- Improper bulb
- Faulty flasher relay
- Burnt-out bulb

HORN DOES NOT SOUND
- Faulty battery
- Faulty fuse
- Faulty main and/or horn switch
- Improperly adjusted horn
- Faulty horn
- Broken wire harness

XVS1100L/XVS1100LC WIRING DIAGRAM (for US and CAN)

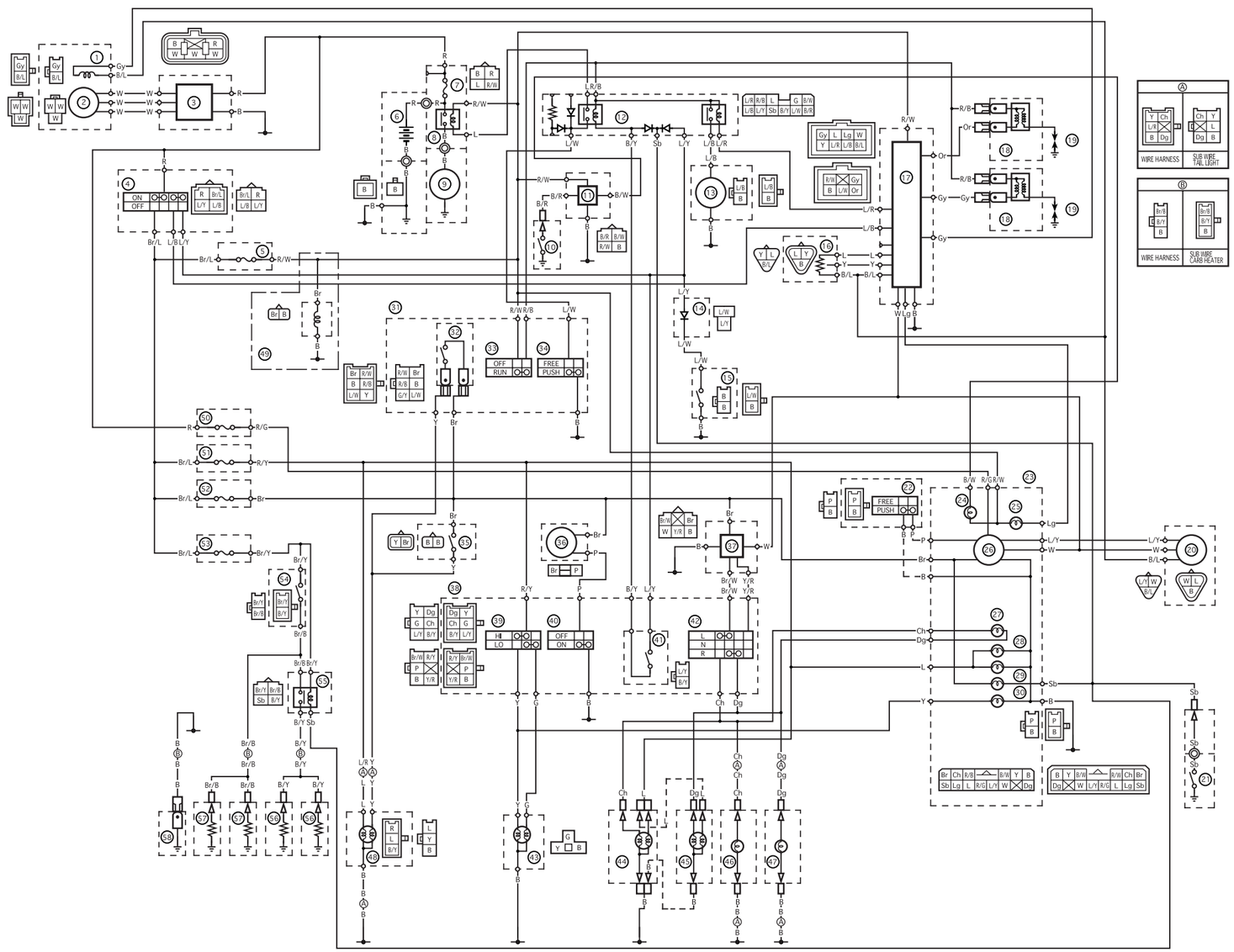

① Pickup coil
② A.C. magneto (stator coil)
③ Rectifire/regulator
④ Main switch
⑤ Ignition fuse
⑥ Battery
⑦ Main fuse
⑧ Starter relay
⑨ Starter motor
⑩ Oil level gauge
⑪ Oil lamp relay
⑫ Starting circuit cut-off relay
⑬ Fuel pump
⑭ Diode
⑮ Sidestand switch
⑯ Throttle position sensor
⑰ Ignitor unit
⑱ Ignition coil
⑲ Spark plug
⑳ Speed sensor
㉑ Neutral switch
㉒ Trip switch
㉓ Meter assembly
㉔ Oil level caution light
㉕ Engine warning light
㉖ Speedmeter
㉗ Turn signal indicator light
㉘ Meter light
㉙ Neutral indicator light
㉚ High beam indicator light
㉛ Right handlebar switch
㉜ Front brake switch
㉝ Engine stop switch
㉞ Start switch
㉟ Rear brake switch
㊱ Horn
㊲ Flasher relay
㊳ Left handlebar switch
㊴ Dimmer switch
㊵ Horn switch
㊶ Clutch switch
㊷ Turn signal switch
㊸ Headlight
㊹ Front turn signal/position light (left)
㊺ Front turn signal/position light (right)
㊻ Rear turn signal light (left)
㊼ Rear turn signal light (right)
㊽ Tail/brake light
㊾ Solenoid (for CAL.)
㊿ Backup fuse
(51) Headlight fuse
(52) Signal fuse
(53) Carburetor heater fuse
(54) Thermo switch
(55) Carburetor heater relay
(56) Carburetor heater 1
(57) Carburetor heater 2
(58) Carburetor heater ground

COLOR CODE

B	Black	L	Blue	W	White	Br/L	Brown/Blue	L/Y	Blue/Yellow
Br	Brown	Lg	Light green	Y	Yellow	Br/W	Brown/White	R/B	Red/Black
Ch	Chocolate	Or	Orange	B/L	Black/Blue	Br/Y	Brown/Yellow	R/G	Red/Green
Dg	Dark green	P	Pink	B/W	Black/White	L/B	Blue/Black	R/W	Red/White
G	Green	R	Red	B/Y	Black/Yellow	L/R	Blue/Red	R/Y	Red/Yellow
Gy	Gray	Sb	Sky blue	Br/B	Brown/Black	L/W	Blue/White	Y/R	Yellow/Red

FOREWORD

This Supplementary Service Manual has been prepared to introduce new service and data for the XVS1100A/XVS1100AC. For complete service information procedures it is necessary to use this Supplementary Service Manual together with the following manual.

XVS1100 SERVICE MANUAL: LIT-11616-12-63 (5EL-28197-E0)

EAS00001

XVS1100AM/XVS1100AMC
SUPPLEMENTARY
SERVICE MANUAL
©1999 by Yamaha Motor
Corporation, U.S.A.
First Edition, October 1999
All rights reserved. Any reproduction or unauthorized use without the written permission of Yamaha Motor Corporation, U.S.A. is expressly prohidited. Printed in U.S.A.
P/N LIT-11616-13-36

EAS00003

NOTICE

This manual was produced by the Yamaha Motor Company, Ltd. primarily for use by Yamaha dealers and their qualified mechanics. It is not possible to include all the knowledge of a mechanic in one manual. There fore, anyone who uses this book to perform maintenance and repairs on Yamaha Vehicles should have a basic understanding of mechanics and the techniques to repair these types of vehicles. Repair and maintenance work attempted by anyone without this knowledge is likely to render the vehicle unsafe and unfit for use.

This model has been designed and manufactured to perform within certain specifications in regard to performance and emissions. Proper service with the correct tools is necessary to ensure that the vehicle will operate as designed. If there is any question about a service procedure, it is imperative that you contact a Yamaha dealer for any service information changes that apply to this model. This policy is intended to provide the customer with the most satisfaction from his vehicle and to conform with federal environmental quality objectives.

Yamaha Motor Company, Ltd. is continually striving to improve all of its models. Modifications and significant changes in specifications or procedures will be forwarded to all authorized Yamaha dealers and will appear in future editions of this manual where applicable.

This Service Manual contains information regarding periodic maintenance to the emission control system. Please read this material carefully.

NOTE:

Designs and specifications are subject to change without notice.

IMPORTANT INFORMATION

Particularly important information is distinguished in this manual by the following notations.

⚠ The Safety Alert Symbol means ATTENTION! BECOME ALERT! YOUR SAFETY IS INVOLVED!

⚠ WARNING Failure to follow WARNING instructions could result in severe injury or death to the motorcycle operator, a bystander or a person inspecting or repairing the motorcycle.

CAUTION: A CAUTION indicates special precautions that must be taken to avoid damage to the motorcycle.

NOTE: A NOTE provides key information to make procedures easier or clearer.

EB002000

HOW TO USE THIS MANUAL

MANUAL ORGANIZATION

This manual consists of chapters for the main categories of subjects. (See “Illustrated symbols”)

1st title ①: This is the title of the chapter with its symbol in the upper right corner of each page.

2nd title ②: This title indicates the section of the chapter and only appears on the first page of each section. It is located in the upper right corner of the page.

3rd title ③: This title indicates a sub-section that is followed by step-by-step procedures accompanied by corresponding illustrations.

EXPLODED DIAGRAMS

To help identify parts and clarify procedure steps, there are exploded diagrams at the start of each removal and disassembly section.

1. An easy-to-see exploded diagram ④ is provided for removal and disassembly jobs.
2. Numbers ⑤ are given in the order of the jobs in the exploded diagram. A number that is enclosed by a circle indicates a disassembly step.
3. An explanation of jobs and notes is presented in an easy-to-read way by the use of symbol marks ⑥. The meanings of the symbol marks are given on the next page.
4. A job instruction chart ⑦ accompanies the exploded diagram, providing the order of jobs, names of parts, notes in jobs, etc.
5. For jobs requiring more information, the step-by-step format supplements ⑧ are given in addition to the exploded diagram and the job instruction chart.

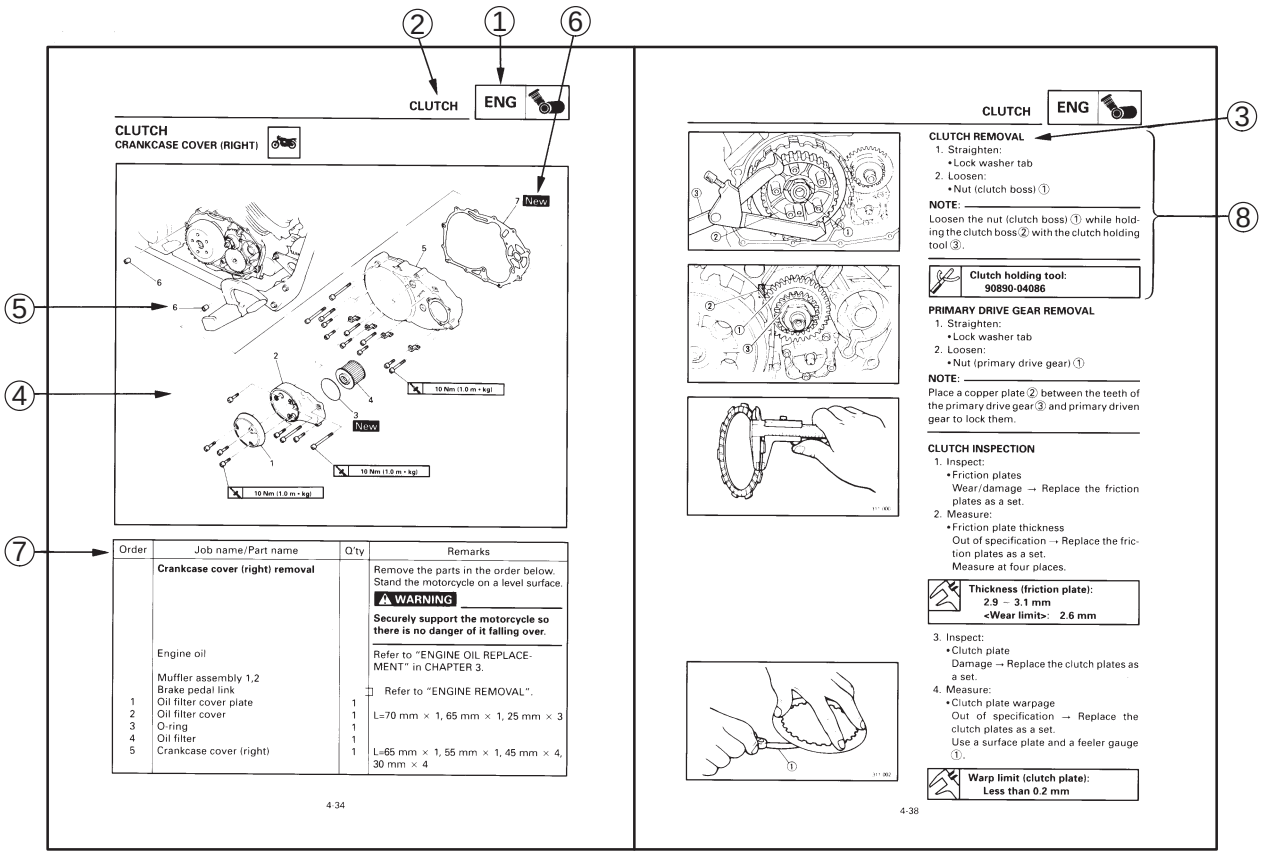

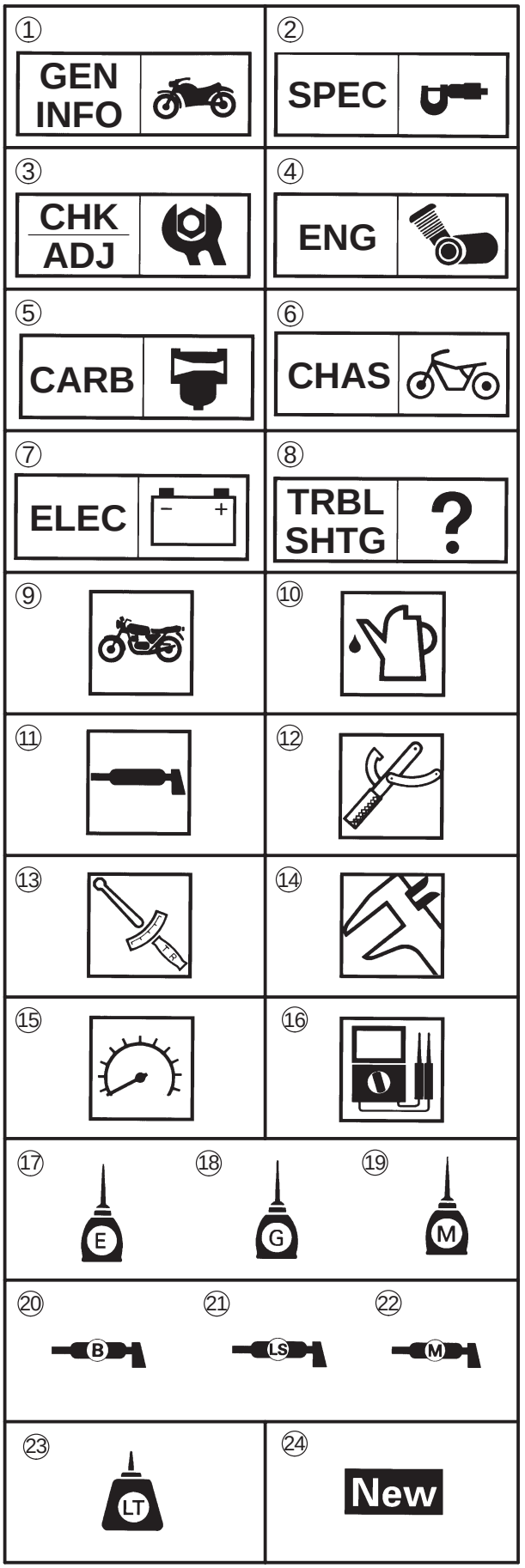

EB003000

ILLUSTRATED SYMBOLS

The following symbols are not relevant to every vehicle.

Symbols ① to ⑧ indicate the subject of each chapter.

① General information
② Specifications
③ Periodic checks and adjustments
④ Engine
⑤ Caburetor
⑥ Chassis
⑦ Electrical system
⑧ Troubleshooting

Symbols ⑨ to ⑯ indicate the following.

⑨ Serviceable with engine mounted
⑩ Filling fluid
⑪ Lubricant
⑫ Special tool
⑬ Tightening torque
⑭ Wear limit, clearance
⑮ Engine speed
⑯ Electrical data

Symbols ⑰ to ㉒ in the exploded diagrams indicate the types of lubricants and lubrication points.

⑰ Engine oil
⑱ Gear oil
⑲ Molybdenum disulfide oil
⑳ Wheel bearing grease
㉑ Lithium soap base grease
㉒ Molybdenum disulfide grease

Symbols ㉓ to ㉔ in the exploded diagrams indicate the following:

㉓ Apply locking agent (LOCTITE®)
㉔ Replace the part

CONTENTS

SPECIFICATIONS

GENERAL SPECIFICATIONS 1
MAINTENANCE SPECIFICATIONS 3
CHASSIS 3
LUBRICATION POINTS AND LUBRICANT TYPES 5
CHASSIS 5
LUBRICATION DIAGRAMS 6
CABLE ROUTING 7

PERIODIC CHECKS AND ADJUSTMENTS

INTRODUCTION 18
PERIODIC MAINTENANCE CHART FOR EMISSION CONTROL SYSTEM 18
GENERAL MAINTENANCE AND LUBRICATION CHART 18
FUEL TANK AND SEATS 20
CHASSIS 21
ADJUSTING THE REAR BRAKE 21
ADJUSTING THE SHIFT PEDAL 22
CHECKING THE TIRES 22
ELECTRICAL SYSTEM 25
ADJUSTING THE HEADLIGHT BEAM 25

CHASSIS

FRONT AND REAR BRAKES 26
FRONT BRAKE PADS 26
REAR BRAKE MASTER CYLINDER 27
FRONT BRAKE CALIPERS 28
FRONT FORK 30
REMOVING THE FRONT FORK LEGS 34
DISASSEMBLING THE FRONT FORK LEGS 34
CHECKING THE FRONT FORK LEGS 35
ASSEMBLING THE FRONT FORK LEGS 36
INSTALLING THE FRONT FORK LEGS 39
STEERING HEAD 41

Item	Standard

Lubrication chart:

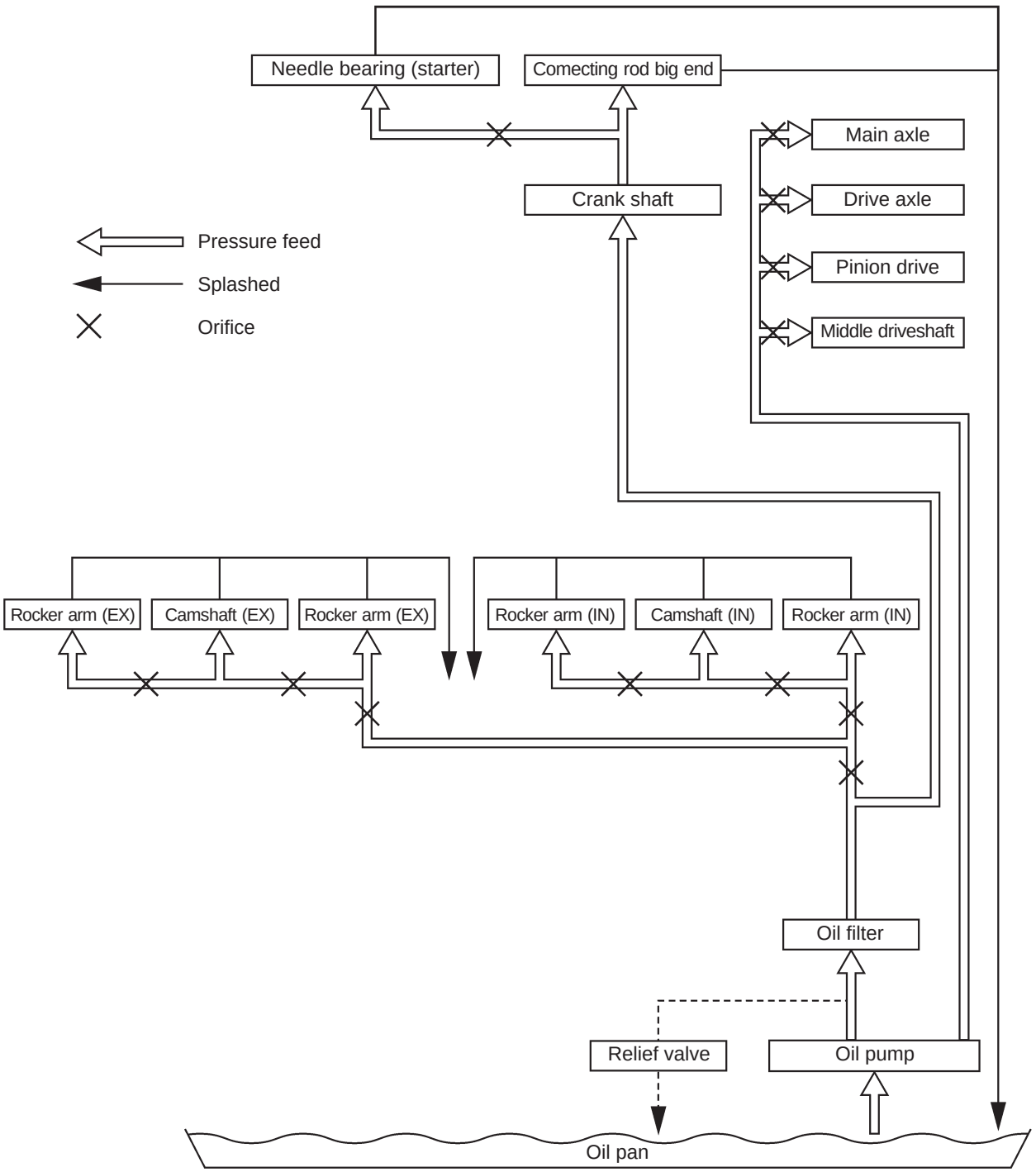

MAINTENANCE SPECIFICATIONS

CHASSIS

Item		Standard	Limit
Front suspension:			
Front fork travel		140 mm (5.51 in)	° ° °
Fork spring free length		361.9 mm (14.25 in)	350 mm (13.78 in)
Fitting length		324.4 mm (12.77 in)	° ° °
Collar length		183 mm (7.20 in)	° ° °
Spring rate	(K1)	8.8 N/mm (0.9 kg/mm, 50.40 lb/in)	° ° °
	(K2)	12.7 N/mm (1.3 kg/mm, 72.80 lb/in)	° ° °
Stroke	(K1)	0 √ 77.5 mm (0 √ 3.05 in)	° ° °
	(K2)	77.5 √ 140 mm (3.05 √ 5.51 in)	° ° °
Optional spring		No	° ° °
Oil capacity		0.464 L (464 cm^3, 16.4 Imp OZ, 15.7 US OZ)	° ° °
Oil level		108 mm (4.25 in)	° ° °
Oil grade		Fork oil 10W or equivalent	° ° °
Brake lever & brake pedal:			
Brake lever free play (at lever end)		5 √ 8 mm (0.20 √ 0.31 in)	° ° °
Brake pedal position		98.5 mm (3.88 in)	° ° °
Brake pedal free play		0 mm (0.00 in)	° ° °
Clutch lever free play (at lever end)		5 √ 10 mm (0.20 √ 0.39 in)	° ° °
Throttle grip free play		4 √ 6 mm (0.16 √ 0.24 in)	° ° °

Tightening torques

Part to be tightened	Thread size	Tightening torque			Remarks
		Nm	m°kg	ft°lb	
Brake hose holder and lower bracket	M6	7	0.7	5.1	
Headlight stay and lower bracket	M8	23	2.3	17	
Headlight body and headlight unit	M5	4	0.4	2.9	
Headlight stay and headlight	M6	7	0.7	5.1	
Helmet hanger and frame	M6	7	0.7	5.1	
Passenger seat	M8	7	0.7	5.1	
Passenger seat braket	M6	7	0.7	5.1	

LUBRICATION POINTS AND LUBRICANT TYPES

EB203010

CHASSIS

Lubrication point	Symbol
Drive shaft coupling gear oil seal	LS

LUBRICATION DIAGRAMS

① Camshaft
② Crankshaft
③ Main axle
④ Middle drive shaft
⑤ Drive axle
⑥ Connecting rod big end

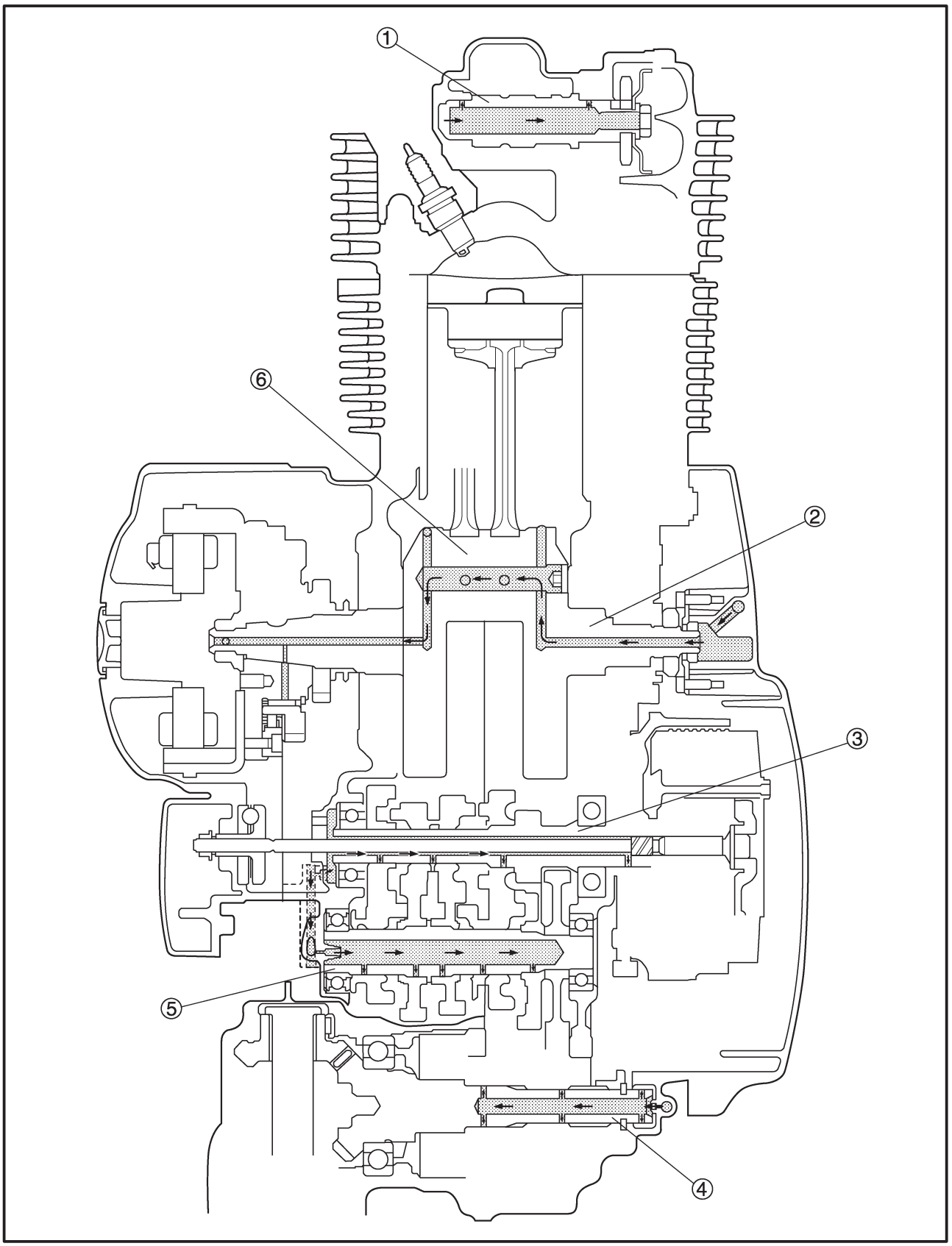

EB206000

CABLE ROUTING

① Clutch cable
② Starter cable
③ Handlebar switch lead (left)
④ Handlebar switch lead (right)
⑤ High tension code
⑥ Throttle cable
⑦ Fuel hose (fuel cock-filter)
⑧ Fuel breather hose (fuel tank-roll over valve) (for CAL)
⑨ Fuse box
⑩ Alarm connector
⑪ Fuel pump lead
⑫ Speed sensor lead
⑬ Sidestand switch lead
⑭ Neutral switch lead
⑮ Pickup coil lead
⑯ To engine
⑰ A.C. magneto lead
⑱ Ventilation hose
⑲ Sensing hose (AIS-carburetor joint)
⑳ Fuel hose (carburetor-fuel pump)
㉑ Clip
㉒ Brake hose
㉓ Heat protector
㉔ Speed meter lead
㉕ Wireharness
㉖ Purge hose (carburetor-solenoid valve) (for CAL)
㉗ Fitting plate
㉘ Fuel hose (inlet) (fuel filter-fuel pump)
㉙ Fuel hose (outlet) (carburetor-fuel pump)
㉚ Alarm connector lead
㉛ Wireharness

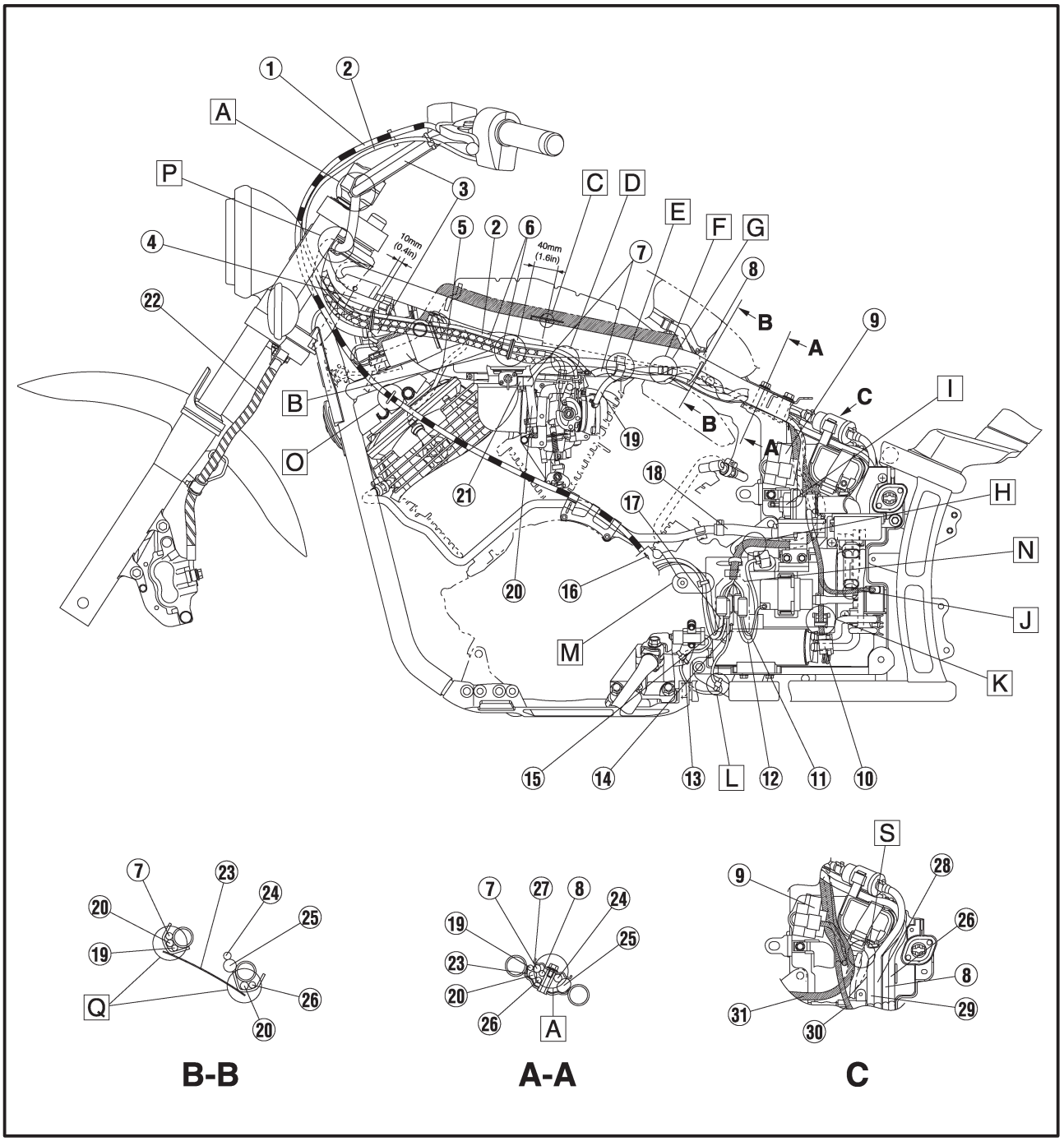

A Fasten the handlebar switch lead (left and rihgt) to the handlebar with plastic locking tie and cut the end of tie.
B Position the throtlle cable and starter cable as shown and clamp them with holder.
C Clamp the wireharness with the hook of frame side.
D When installing the pipe of throttle cable press it inside.
E Clamp the fuel hoses to the frame with the clamp.
F Change the fuel hose (fuel cock side) and fuel hose (carburetor side) between guide of frame and clamp. (carburetor side is upper)
G When connecting the sensing hose (carburetor joint-AIS) with a nozzle.
H Push the wireharness inside of the side cover.
I Push the sensing hose inside of the LID and not bend the sensing hose.

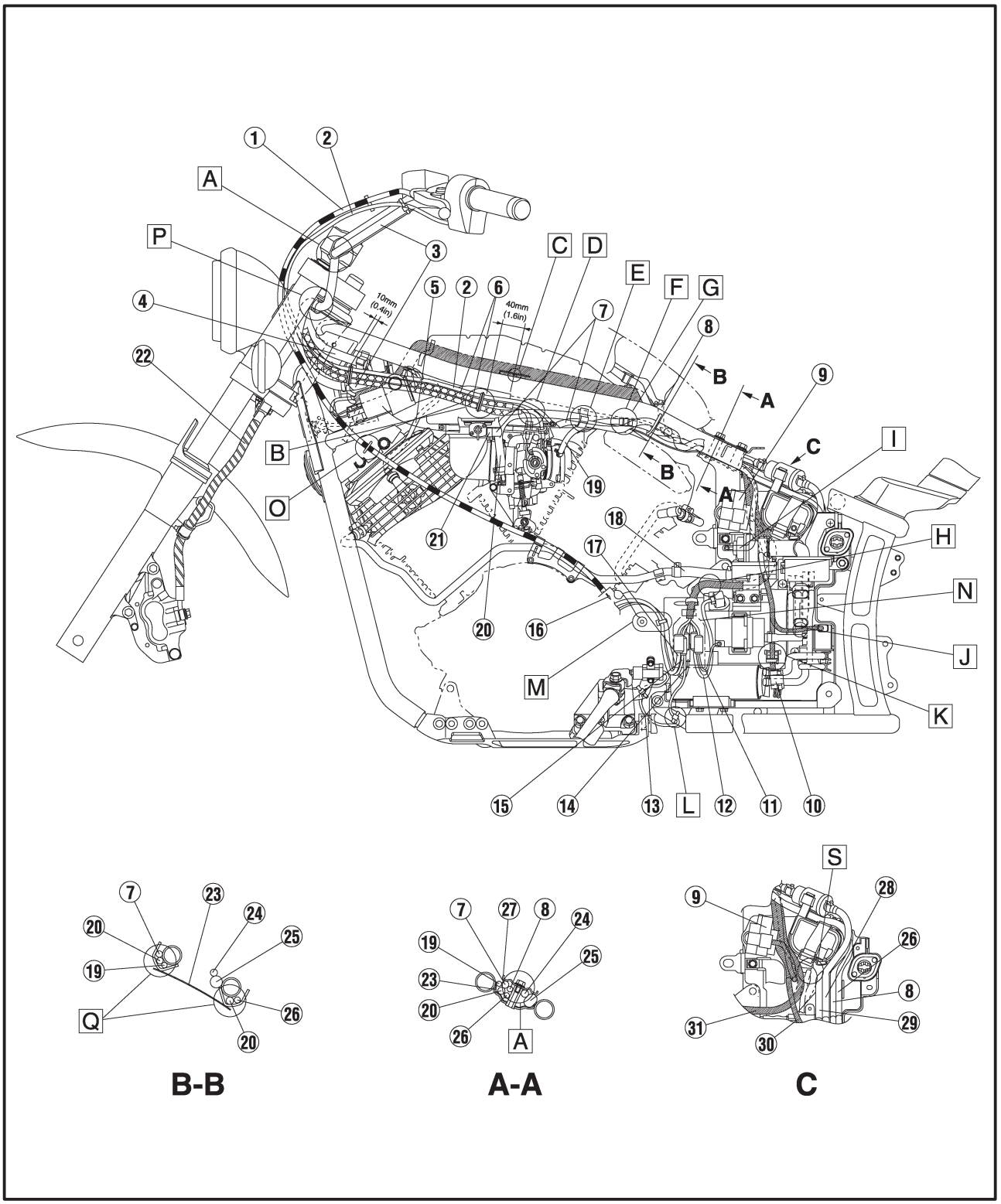

[J] Through the wireharness of solenoid valve between AIS duct and fuel hose (for CAL).
[K] Fasten the alarm lead with a plastic band on the LID.
[L] Fasten the sidestand switch lead to the bracket of LID with plastic locking tie.
[M] Fasten the lead with locking tie near the side cover.
[N] Position the all connectors inside of the connector cover.
[O] Route the clutch cable through the cable guide.
[P] Fasten the handlebar switch leads (left and right) under the handle crown with a plastic band. Set the band at four notches and install it no slacking.
[Q] Route the each hoses through the frame guide and do not pinch it.
[R] When installing the fitting plate, do not pinch the each hoses and wireharness.
[S] Wher install the AIS push the wireharness to space of rearside.

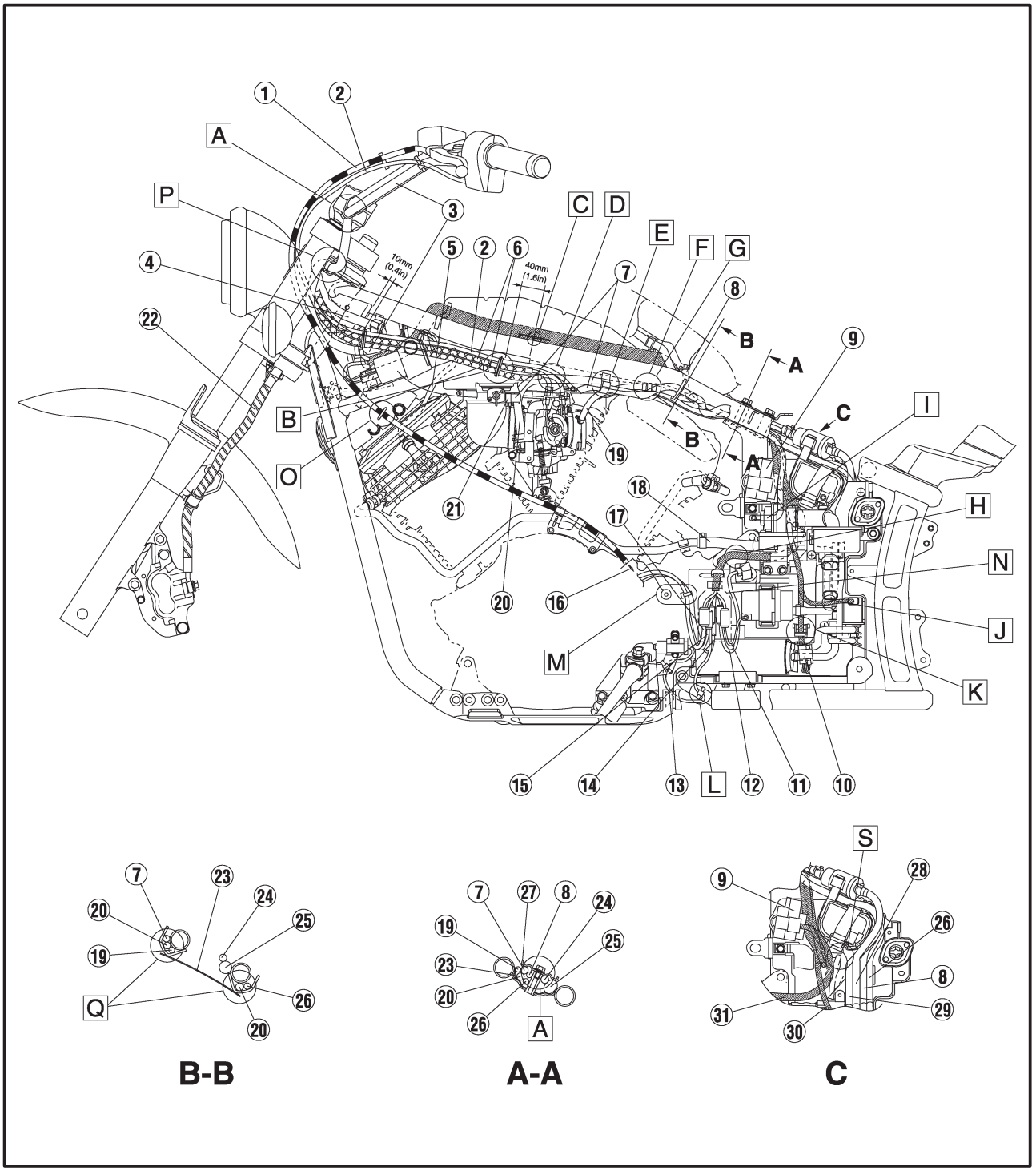

① Battery
② Battery positive (+) lead
③ Starter motor positive lead
④ Speedmeter lead
⑤ Fuel hose (carburetor-fuel pump)
⑥ High tension code
⑦ Main switch lead
⑧ Throttle cable
⑨ Brake hose
⑩ Handlebar switch lead (right)
⑪ Headlight lead
⑫ Ignition coil
⑬ Breather hose
⑭ Purge hose (carburetor-solenoid valve) (for CAL)
⑮ Rear brake switch
⑯ Reserve hose
⑰ Air filter drain hose
⑱ Delay relay
⑲ Battery negative (–) lead
⑳ Starter motor positive (+) lead
㉑ Oil level switch lead
㉒ Rear brake switch lead
㉓ Carburetor heater connecter
㉔ Light reduce relay
㉕ Rectifier/regulator
㉖ Stay. 1
㉗ Down tube
㉘ frame
㉙ Stay. 2
㉚ Battery box
㉛ Carburetor heater lead
㉜ Light reduce lelay lead

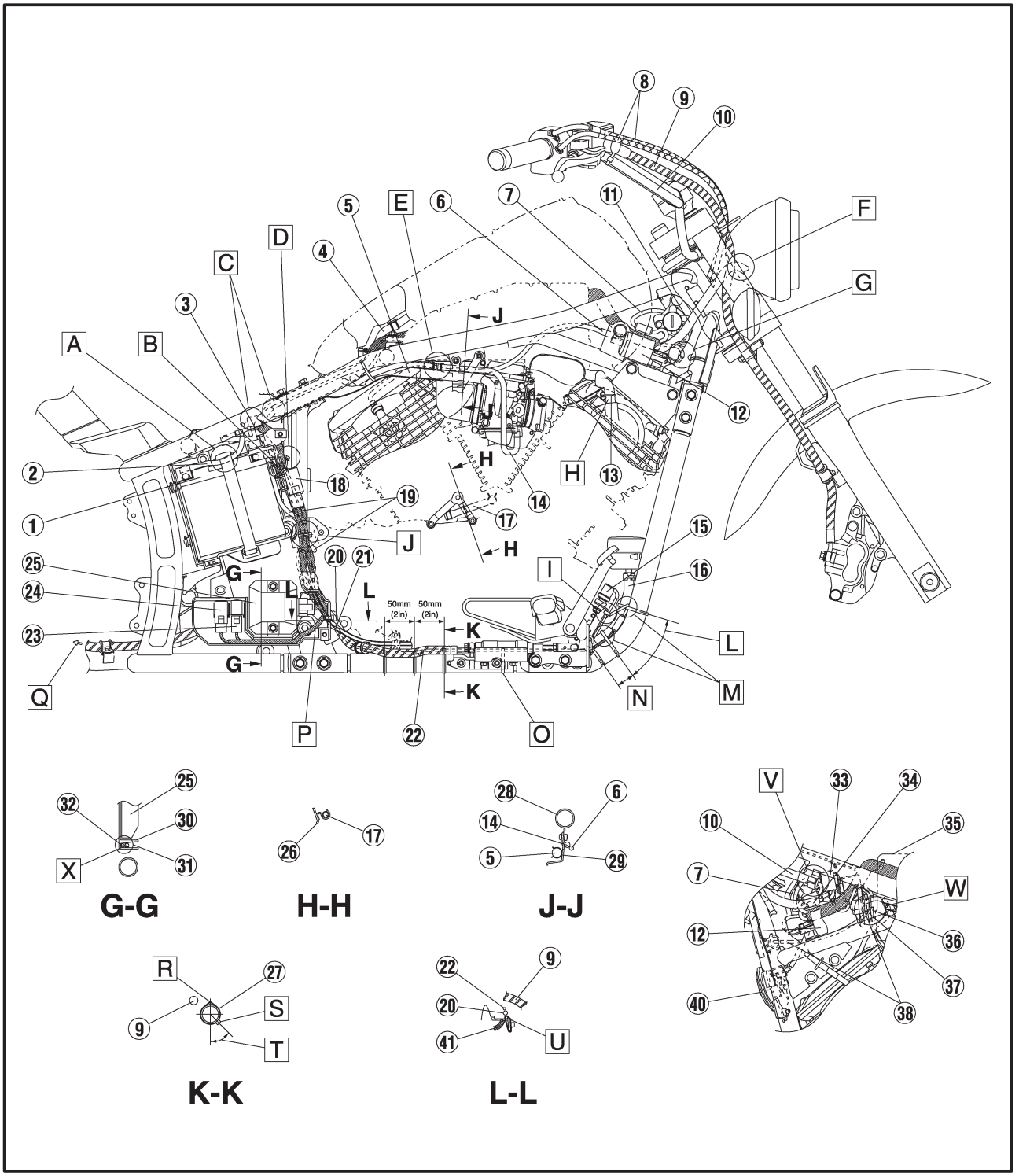

㉝ Flasher relay
㉞ Handlebar switch lead (left)
㉟ Silencer
㊱ Throttle position sensor lead
㊲ Carburetor heater lead
㊳ Thermo switch lead
㊴ Starting circuit cut-off relay
㊵ Horn
㊶ Rectifire/regulator and light (reduce relay) lead

A Clamp the battery positive (+) lead to the battery with battery band.
B Connect the battery negative (–) lead and push it in to the space between battery box and battery.
C Push the wireharness into the space between frame and starter motor relay.
D Route the rectifire/regulator lead, wireharness and starter motor positive (+) lead through the out of frame bracket and fasten them to the frame with a plastic locking tie. The place to fix must be between 0 mm (0 in) and 10 mm (0.4in) from the top of the diverging point of the lead on the harness side whitch connected the battery negative (–) lead.

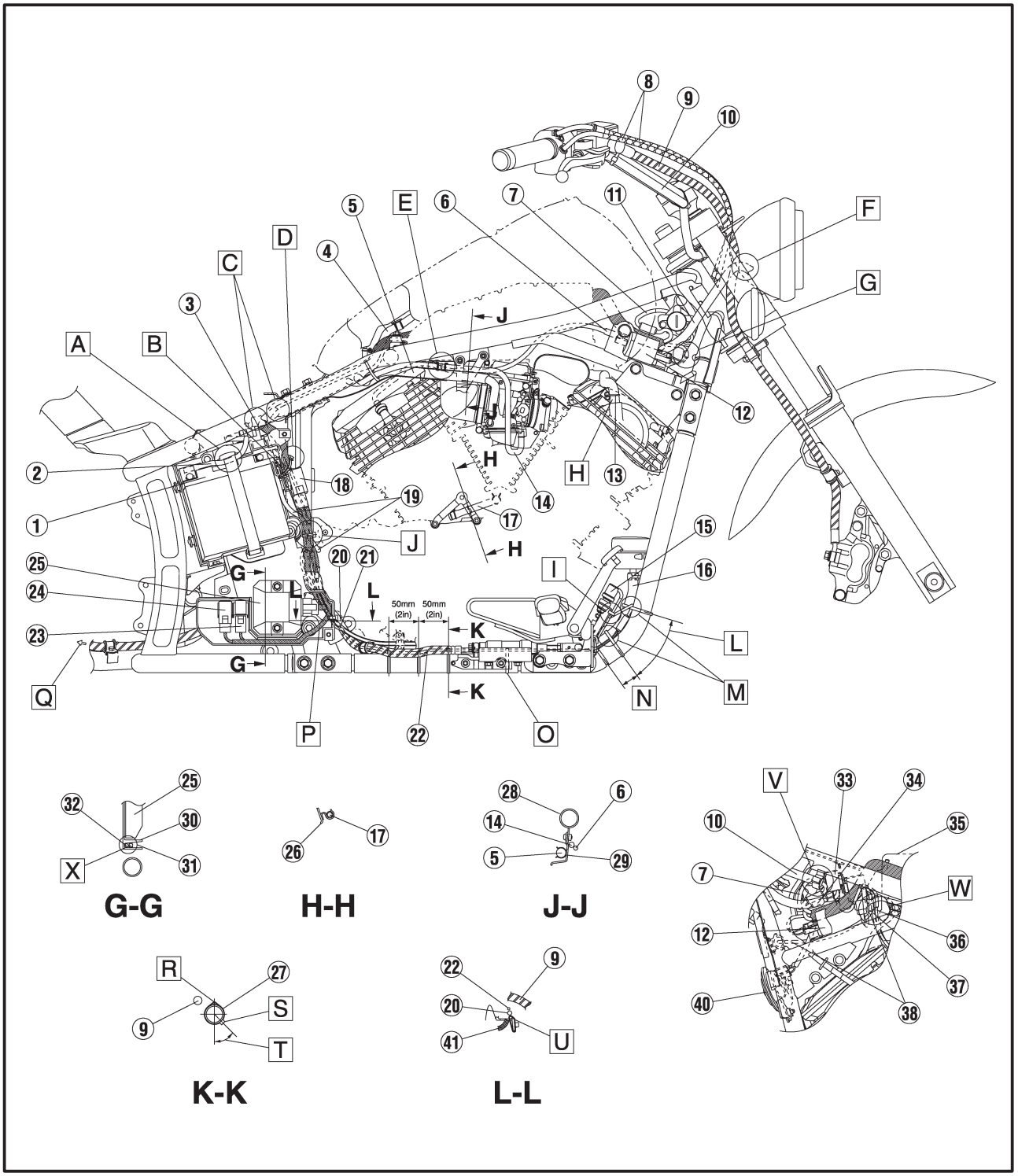

E Connect the purge hose (carburetor side-solenoid valve side) with joint, knob is out side of frame.
F Route the front turn signal/position light lead and headlight lead through the rear of headlight body hole.
G Connect the ignition coil lead at red tape to the right side.
H Knob of clip is rearside of body.
I Fasten the rear brake switch lead to the rear brake switch bracket with a plastic locking tie and cut of the end, inside of frame.
J Fasten the wireharness, starter motor positive (+) lead and battery negative (–) lead to the frame with a plastic locking tie.
K From the engine.
L About 70 mm (2.8 in)
M Fasten the rear brake switch lead and master cylinder reservoir hose to the down tube with a plastic locking tie, and cut the end of locking tie and position is inside of frame.
N About 20 mm (0.8 in) from bead end.
O Locate the band to forward of down tube.
P Route the rectifire/regulator lead and carburetor heater lead through inside of battery box hole to outside it and connect them.

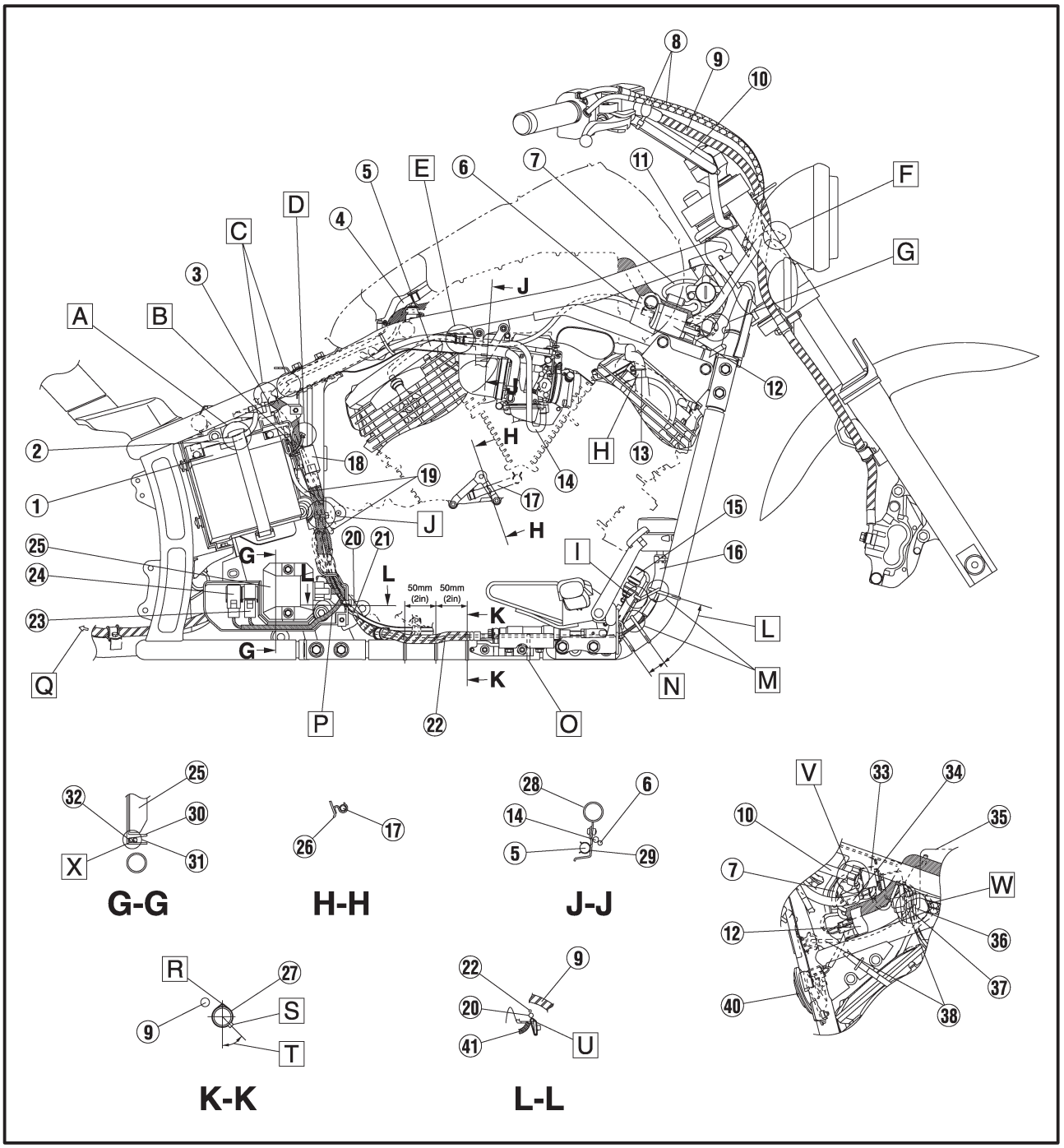

① Brake hose
② Throttle cable
③ Master cylinder reservoir hose
④ High tension code
⑤ Purge hose (carburetor-solenoid valve) (for CAL)
⑥ Rear brake switch lead
⑦ Fuel hose (carburetor-fuel pump)
⑧ Delay relay
⑨ Battery negative (–) lead
⑩ Battery negative (–) lead connector
⑪ Battery
⑫ Battery positive (+) lead
⑬ Taillight lead
⑭ Starter relay
⑮ Starter motor positive (+) lead
⑯ Fuel tank breather hose (fuel tank-roll over valve) (for CAL)
⑰ Outlet
⑱ Inlet
⑲ Ventilation hose
⑳ Starter cable
㉑ Sensing hose (AIS-carburetor joint)
㉒ Fuel hose (fuel cock-fuel filter)
㉓ Throttle position sensor lead
㉔ Carburetor heater lead
㉕ Tappet cover
㉖ Clutch cable
㉗ Thermo switch lead
㉘ Wireharness
㉙ Frame
㉚ Igniter unit
㉛ LID. 2
㉜ Mud guard
㉝ Fuel filter
㉞ LID.
㉟ Ignitor unit lead
㊱ Speed meter lead connecter

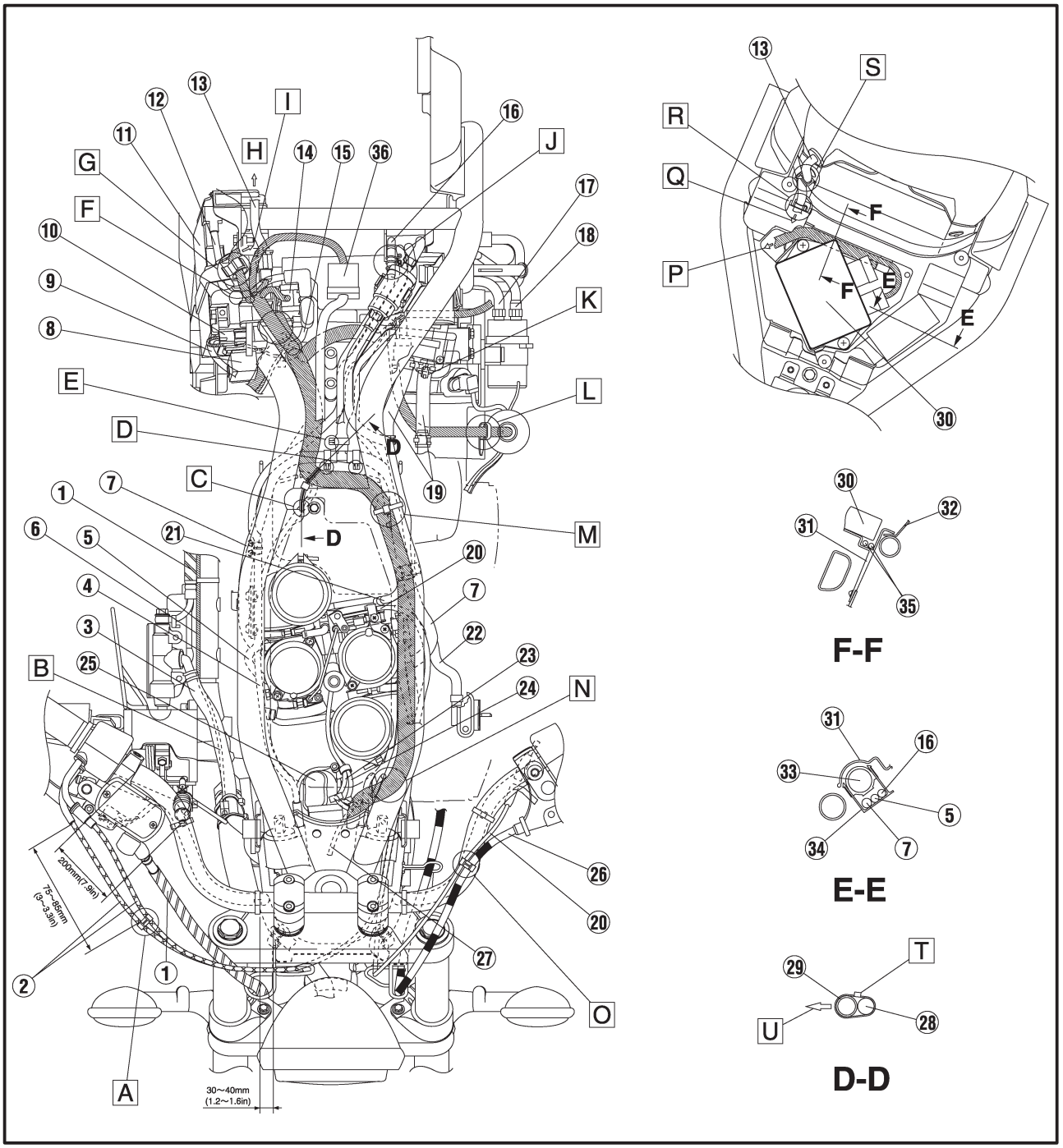

① Brake hose
② Throttle cable
③ Master cylinder reservoir hose
④ High tension code
⑤ Purge hose (carburetor-solenoid valve) (for CAL)
⑥ Rear brake switch lead
⑦ Fuel hose (carburetor-fuel pump)
⑧ Delay relay
⑨ Battery negative (–) lead
⑩ Battery negative (–) lead connector
⑪ Battery
⑫ Battery positive (+) lead
⑬ Taillight lead
⑭ Starter relay
⑮ Starter motor positive (+) lead
⑯ Fuel tank breather hose (fuel tank-roll over valve) (for CAL)
⑰ Outlet
⑱ Inlet
⑲ Ventilation hose
⑳ Starter cable
㉑ Sensing hose (AIS-carburetor joint)
㉒ Fuel hose (fuel cock-fuel filter)
㉓ Throttle position sensor lead
㉔ Carburetor heater lead
㉕ Tappet cover
㉖ Clutch cable
㉗ Thermo switch lead
㉘ Wireharness
㉙ Frame
㉚ Igniter unit
㉛ LID. 2
㉜ Mud guard
㉝ Fuel filter
㉞ LID.
㉟ Ignitor unit lead
㊱ Speed meter lead connecter

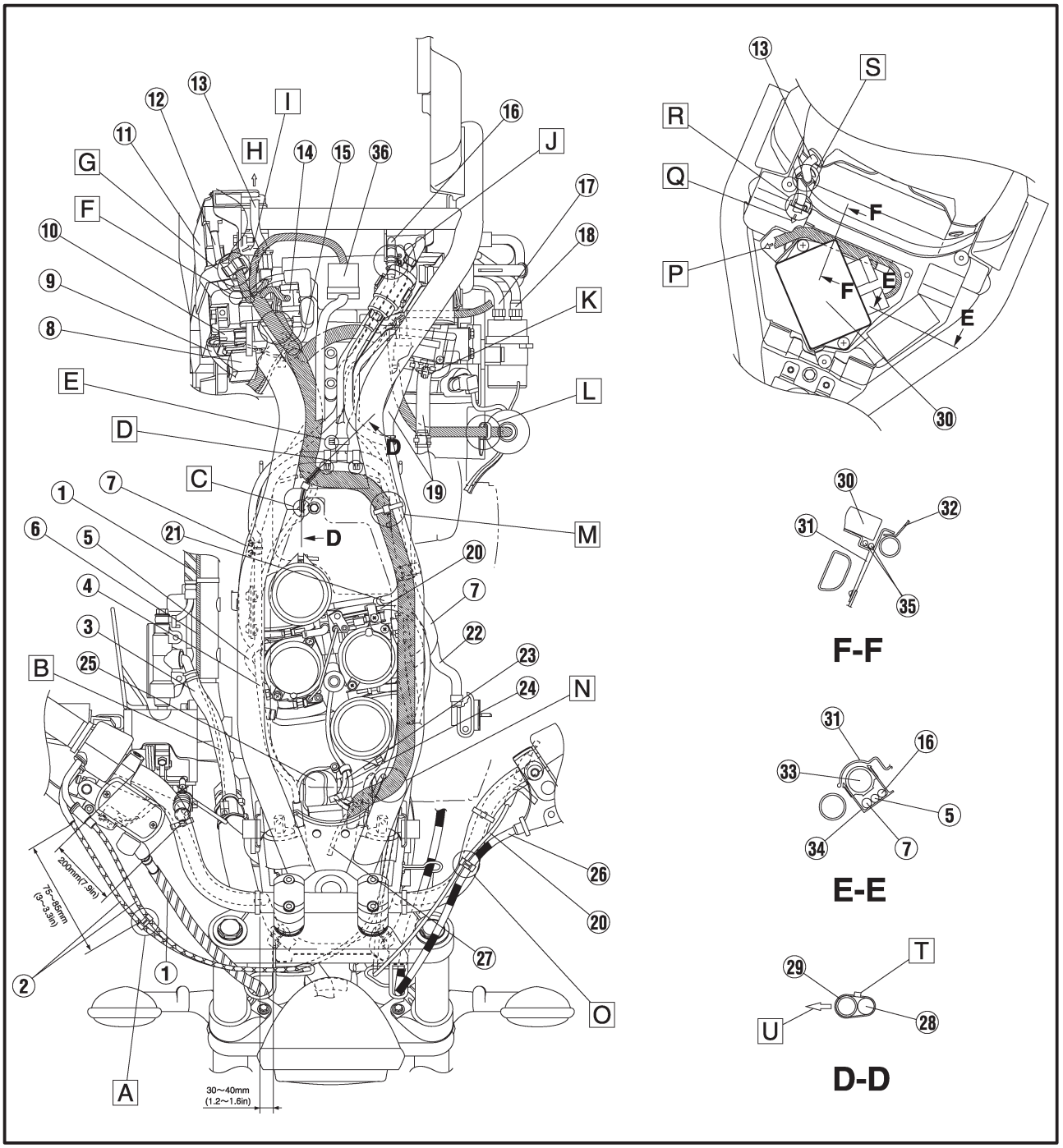

A Clamp the throttle cables with the holder. Position the end of clip downword.
B Route the rear brake switch lead under the master cylinder reservor hose.
C Position the band end of right side bracket.
D Position the steel band end to forward.
E Position the steel band end to right side.
F Route the battery positive (+) lead through the slit of the battery box.
G Clamp the igniter unit lead to the frame with a holder.
H To the rear fender.
I Connect the wireharness to the ignitar unit through the hole of LID. 2.
J Route the fuel tank breather hose under the fuel filter and connect it (fuel tank sideroll over valve side) with a joint. Position the end of clip outside.

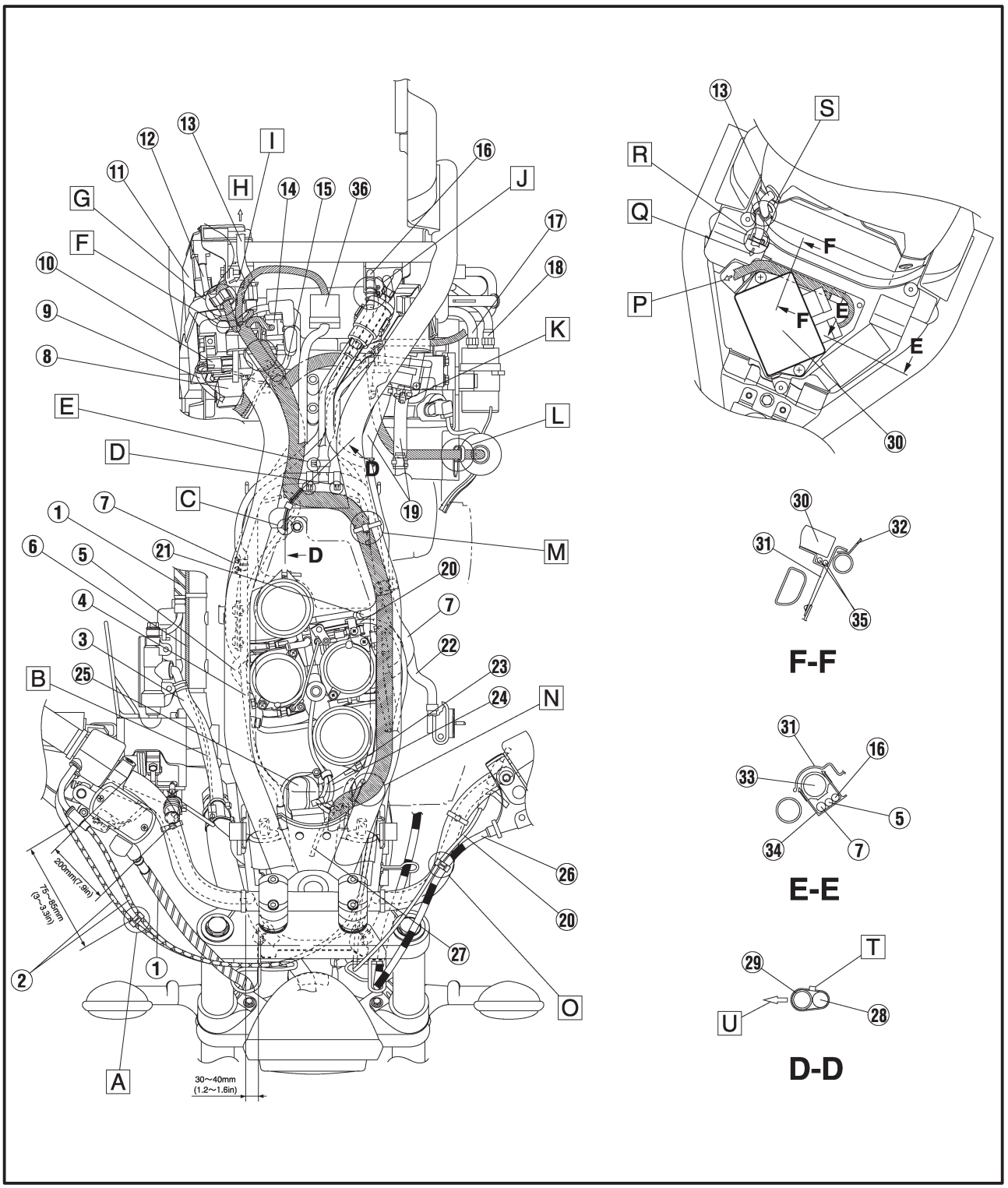

[K] Position the mark on the steel band to forward.
[L] Fasten the wireharness with a band on the tool box plate.
[M] Fasten the wireharness to the frame with a plastic locking tie. Position the locking tie front of the holder.
[N] Route the wireharness outside of the guide on the frame.
[O] Clamp the clutch cable and starter cable with a holder. Position the end of holder down side.
[P] Route the igniter lead through the igniter plate hole to the wireharness.
[Q] To the wireharness.
[R] Clamp the taillight lead with mud guard clamp.
[S] Clamp the taillight lead with a holder on the mud guard.
[T] Position the locking tie upward.
[U] The front direction of the level body.

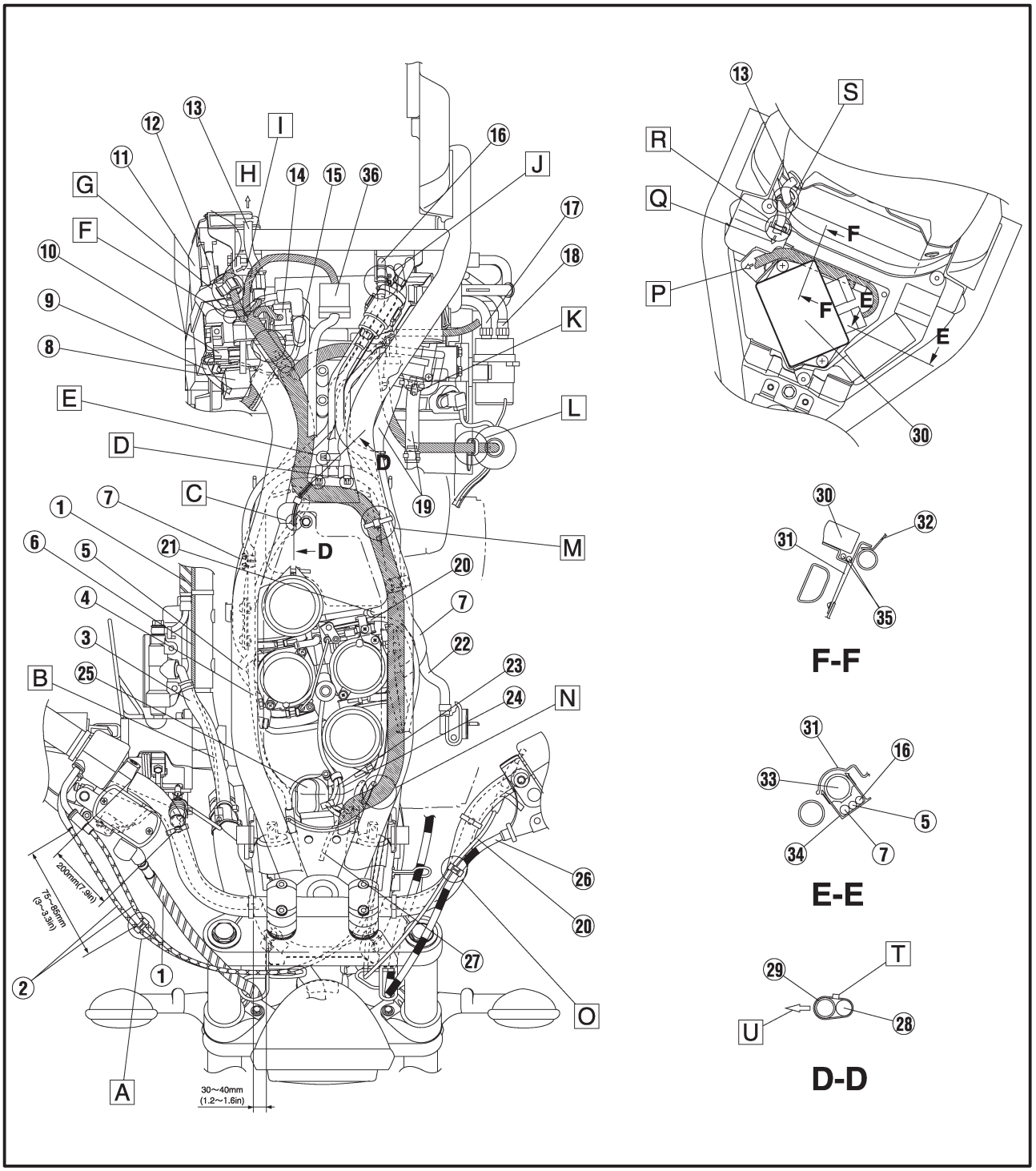

① Throttle cable
② Starter cable
③ Clutch cable
④ Handlebar switch lead (left)
⑤ Headlight lead
⑥ Brake hose
⑦ Handlebar switch lead (right)

A Route the handlebar switch lead (right) rear side of the throttle cable.

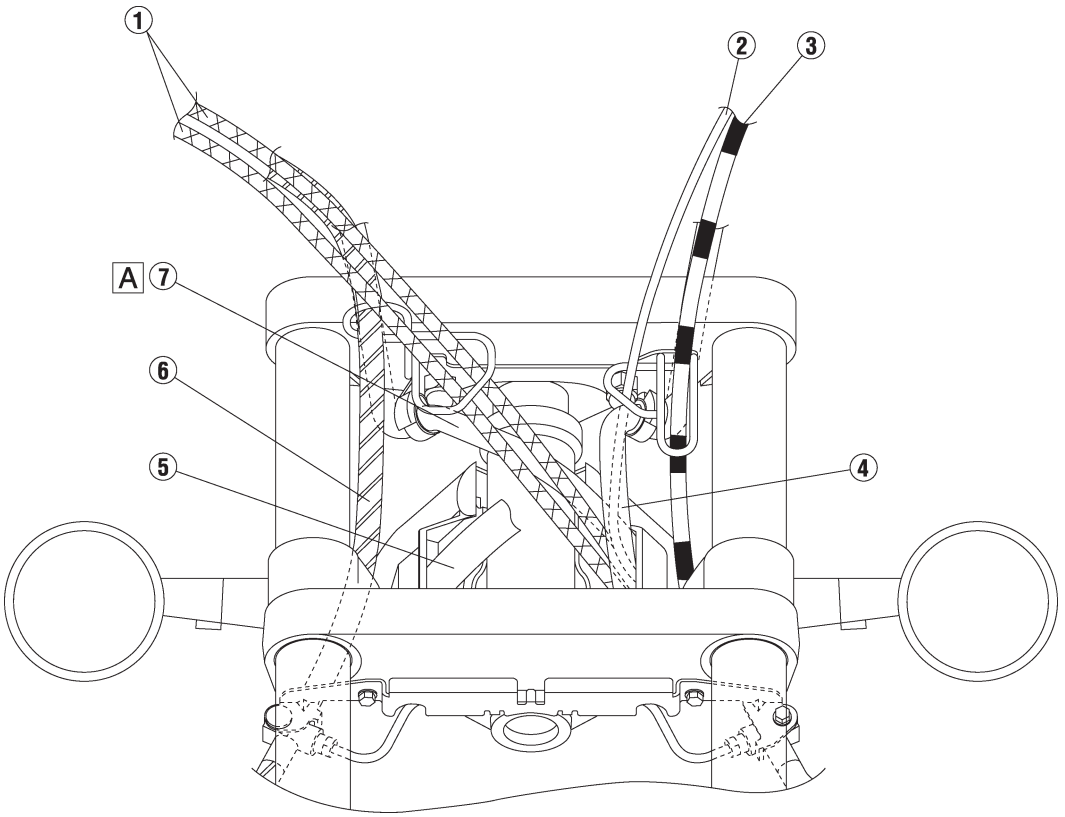

EB300000

PERIODIC CHECKS AND ADJUSTMENTS

INTRODUCTION

This chapter includes all information necessary to perform recommended checks and adjustments. If followed, these preventive maintenance procedures will ensure more reliable vehicle operation, a longer service life and reduce the need for costly overhaul work. This information applies to vehicles already in service as well as to new vehicles that are being prepared for sale. All service technicians should be familiar with this entire chapter.

EB301000

PERIODIC MAINTENANCE CHART FOR EMISSION CONTROL SYSTEM

No.		ITEM	REMARKS	INITIAL	ODOMETER READINGS				
				600 mi (1,000 km) or 1 month	4,000 mi (7,000 km) or 6 months	8,000 mi (13,000 km) or 12 months	12,000 mi (19,000 km) or 18 months	16,000 mi (25,000 km) or 24 months	20,000 mi (31,000 km) or 30 months
1	*	**Valve clearance**	° Check and adjust valve clearance when engine is cold.	√	√	√	√	√	√
2		**Spark plugs**	° Check condition. ° Adjust gap and clean. ° Replace at 8,000 mi (13,000 km) or 12 months and thereafter every 8,000 mi (13,000 km) or 12 months.		√	Replace	√	Replace	√
3	*	**Crankcase ventilation system**	° Check ventilation hose for cracks or damage. ° Replace if necessary.		√	√	√	√	√
4	*	**Fuel line**	° Check fuel hose for cracks or damage. ° Replace if necessary.		√	√	√	√	√
5	*	**Fuel filter**	° Replace initial 20,000 mi (31,000 km) and thereafter every 20,000 mi (31,000 km).						√
6	*	**Exhaust system**	° Check for leakage. ° Retighten if necessary. ° Replace gasket(s) if necessary.		√	√	√	√	√
7	*	**Carburetor synchronization**	° Adjust synchronization of carburators.	√	√	√	√	√	√
8	*	**Idle speed**	° Check and adjust engine idle speed. ° Adjust cable free play.		√	√	√	√	√
9	*	**Evaporative emission control system****	° Check control system for damage. ° Replace if necessary.				√		√

* Since these items require special tools, data and technical skills, they should be serviced by a Yamaha dealer.

** California only.

GENERAL MAINTENANCE AND LUBRICATION CHART

No.		ITEM	REMARKS	INITIAL	ODOMETER READINGS				
				600 mi (1,000 km) or 1 month	4,000 mi (7,000 km) or 6 months	8,000 mi (13,000 km) or 12 months	12,000 mi (19,000 km) or 18 months	16,000 mi (25,000 km) or 24 months	20,000 mi (31,000 km) or 30 months
1		**Engine oil**	° Replace. ° Warm engine before draining.	√	√	√	√	√	√
2	*	**Engine oil filter**	° Replace.	√		√		√	
3		**Air filter**	° Clean or replace if necessary.		√	√	√	√	√
4	*	**Brake system**	° Check operation, fluid level, and fluid leakage. ° Correct accordingly. ° Replace pads if necessary.	√	√	√	√	√	√
5	*	**Clutch**	° Check operation. ° Adjust or replace cable.	√	√	√	√	√	√

No.		ITEM	REMARKS	INITIAL	ODOMETER READINGS				
				600 mi (1,000 km) or 1 month	4,000 mi (7,000 km) or 6 months	8,000 mi (13,000 km) or 12 months	12,000 mi (19,000 km) or 18 months	16,000 mi (25,000 km) or 24 months	20,000 mi (31,000 km) or 30 months
6	*	**Final gear oil**	° Check oil level and leakage. ° Replace at initial 600 mi (1,000 km) or 1 month and thereafter every 16,000 mi (25,000 km) or 24 months. ° SAE 80 API "GL-4" hypoid gear oil.	Replace		Check		√	
7	*	**Control and meter cable**	° Apply chain lube thoroughly. ° Yamaha chain and cable lube or SAE 10W30 motor oil.	√	√	√	√	√	√
8	*	**Swingarm pivot bearing**	° Check swingarm pivot for play. ° Correct if necessary. ° Moderately repack every 16,000 mi (25,000 km) or 24 months with lithium soap base grease.					Repack	
9		**Brake / Clutch lever pivot shaft**	° Apply chain lube thoroughly. ° Yamaha chain and cable lube or SAE 10W30 motor oil.		√	√	√	√	√
10		**Brake pedal and shift pedal shaft**	° Apply chain lube thoroughly. ° Yamaha chain and cable lube or SAE 10W30 motor oil.		√	√	√	√	√
11		**Sidestand pivots**	° Check operation. ° Lubricate and repair if necessary. ° Yamaha chain and cable lube or SAE 10W30 motor oil.		√	√	√	√	√
12	*	**Front fork**	° Check operation and for oil leakage. ° Correct accordingly.		√	√	√	√	√
13	*	**Steering bearings**	° Check bearing play and steering for smooth operation. ° Correct if necessary. ° Moderately repack every 16,000 mi (25,000 km) or 24 months. ° Lithium soap base grease.		√	√	√	Repack	√
14	*	**Wheel bearings**	° Check bearings for looseness and damage. ° Replace if necessary.		√	√	√	√	√
15	*	**Wheels**	° Check balance, runout, spoke tightness and for damage. ° Tighten spokes and rebalance or replace if necessary.		√	√	√	√	√
16	*	**Sidestand switch**	° Check operation. ° Replace if necessary.	√	√	√	√	√	√
17	*	**Tires**	° Check tire tread wear and for damage. ° Replace if necessary.		√	√	√	√	√
18	*	**Rear shock absorber**	° Check operation and for oil leakage. ° Replace if necessary.		√	√	√	√	√
19	*	**Chassis fasteners**	° Make sure that all nuts, bolts and screws are properly tightened. ° Tighten if necessary.		√	√	√	√	√

* Since these items require special tools, data and technical skills, they should be serviced by a Yamaha dealer.

NOTE:

For odometer readings or time periods higher than 20,000 mi (31,000 km) or 30 months, repeat the same maintenance as listed in the chart from the 4,000 mi (7,000 km) or 6 month interval.

NOTE:

° The air filter needs more frequent service if you are riding in unusually wet or dusty areas.
° Hydraulic brake system
  ° When disassembling the master cylinder or caliper cylinder, always replace the brake fluid. Check the brake fluid level regularly and fill as required.
  ° Replace the oil seals on the inner parts of the master cylindre and caliper cylinder every two years.
  ° Replace the brake hoses every four years or if cracked or damaged.

FUEL TANK AND SEATS

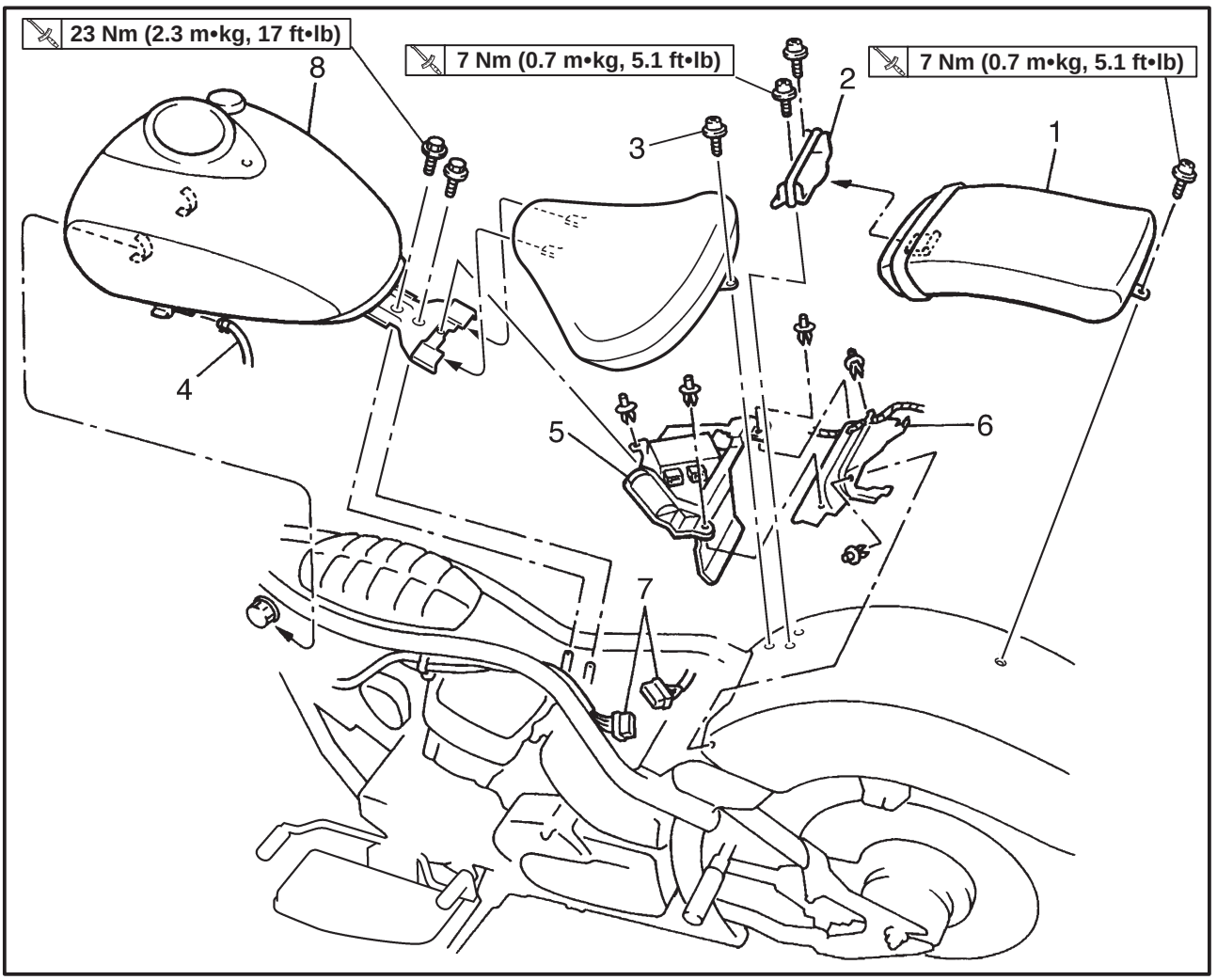

Order	Job/Part	Q'ty	Remarks
	Fuel tank and seats removal		Remove the parts in the order below.
1	Passenger seat	1	
2	Passenger seat bracket	1	
3	Rider's seat	1	
4	Fuel hose	1	**NOTE:** Set the fuel cock to "OFF" before disconnecting the fuel hose.
5	Ignitor plate	1	
6	Mud guard	1	
7	Meter lead couper	1	
8	Fuel tank assembly	1	For installation, reverse the removal procedure.

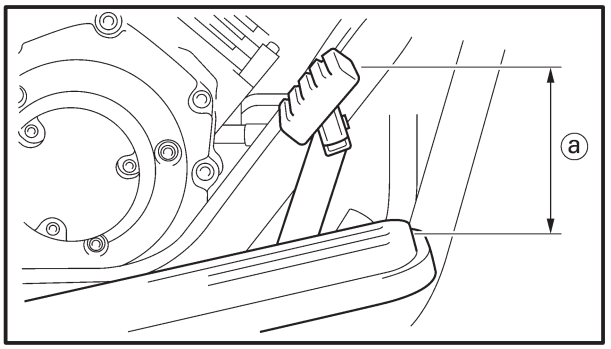

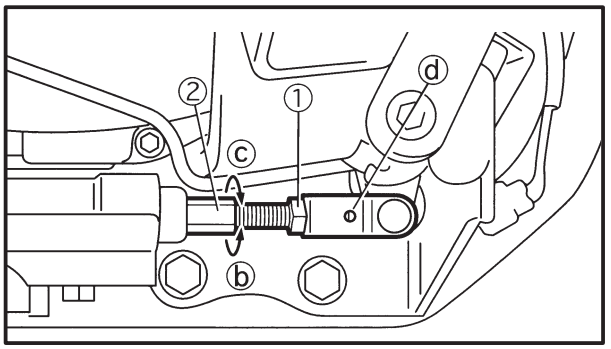

CHASSIS

EAS00110

ADJUSTING THE REAR BRAKE

1. Check:
   - brake pedal position
     (distance ⓐ from the top of the rider footrest to the top of the brake pedal)
     Out of specification → Adjust.

Brake pedal position (below the top of the rider footrest) **98.5 mm (3.88 in)**

2. Adjust:
   - brake pedal position

▼▼▼▼▼▼▼▼▼▼▼▼▼▼▼▼▼▼▼▼▼▼▼▼▼▼▼▼▼▼▼▼

a. Loosen the locknut ①.
b. Turn the adjusting bolt ② in direction ⓑ or ⓒ until the specified brake pedal position is obtained.

Direction ⓑ → Brake pedal is raised.
Direction ⓒ → Brake pedal is lowered.

⚠ WARNING

After adjusting the brake pedal position, check that the end of the adjusting bolt ② is visible through the hole ⓓ.

c. Tighten the locknut ① to specification.

Locknut **16 Nm (1.6 m·kg, 12 ft·lb)**

⚠ WARNING

A soft or spongy feeling in the brake pedal can indicate the presence of air in the brake system. Before the vehicle is operated, the air must be removed by bleeding the brake system. Air in the brake system will considerably reduce braking performance and could result in loss of control and possibly an accident. Therefore, inspect and, if necessary, bleed the brake system.

CAUTION:

After adjusting the brake pedal position, make sure that there is no brake drag.

▲▲▲▲▲▲▲▲▲▲▲▲▲▲▲▲▲▲▲▲▲▲▲▲▲▲▲▲▲▲▲▲

3. Adjust:
   - rear brake light switch
     Refer to “ADJUSTING THE REAR BRAKE LIGHT SWITCH”.

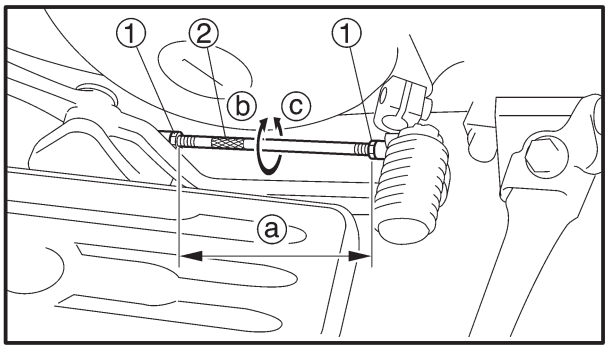

EAS00137

ADJUSTING THE SHIFT PEDAL

NOTE:

The shift pedal position is determined by the adjusting bolt length ⓐ.

1. Measure:
   - adjusting the length ⓐ
     Incorrect → Adjust.

Adjusting bolt length **114.9 mm (4.53 in)**

2. Adjust:
   - adjusting bolt length ⓐ

▼▼▼▼▼▼▼▼▼▼▼▼▼▼▼▼▼▼▼▼▼▼▼▼▼▼▼▼▼▼▼▼

a. Loosen both locknuts ①
b. Turn the adjusting bolt ② in direction ⓑ or ⓒ to obtain the correct shift pedal position.

Direction ⓑ → shift pedal is raised.
Direction ⓒ → shift pedal is lowered.

▲▲▲▲▲▲▲▲▲▲▲▲▲▲▲▲▲▲▲▲▲▲▲▲▲▲▲▲▲▲▲▲

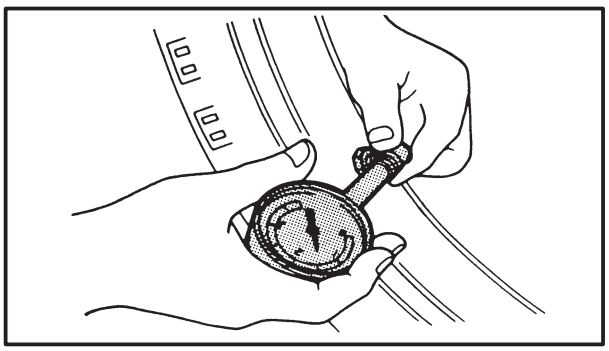

EB304174

CHECKING THE TIRES

The following procedure applies to both of the tires.

1. Measure:
   - tire pressure
     Out of specification → Regulate.

⚠ WARNING

- **The tire pressure should only be checked and regulated when the tire temperature equals the ambient air temperature.**
- **The tire pressure and the suspension must be adjusted according to the total weight (including cargo, rider, passenger and accessories) and the anticipated riding speed.**
- **Operation of an overloaded motorcycle could cause tire damage, an accident or an injury.**

NEVER OVERLOAD THE MOTORCYCLE.

Basic weight: (with oil and full fuel tank)	**288 kg (635 lb)**	
Maximum load*:	**200 kg (441 lb)**	
Cold tire pressure:	**Front**	**Rear**
Up to 90 kg (198 lb) load*	**225 kPa (2.25 kg/cm^2, 32.6 psi)**	**225 kPa (2.25 kg/cm^2, 32.6 psi)**
90 kg (198 lb) / maximum load*	**225 kPa (2.25 kg/cm^2, 32.6 psi)**	**250 kPa (2.50 kg/cm^2, 36.3 psi)**
High speed riding	**225 kPa (2.25 kg/cm^2, 32.6 psi)**	**250 kPa (2.50 kg/cm^2, 36.3 psi)**

*: total of cargo, rider, passenger and accessories

WARNING

It is dangerous to ride with a worn-out tire. When the tire tread reaches the wear limit, replace the tire immediately.

2. Check:
   - tire surfaces
     Damage/wear → Replace the tire.

Minimum tire tread depth
1.6 mm (0.06 in)

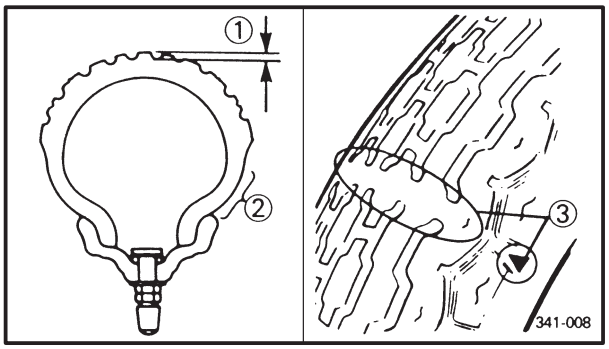

① Tire tread depth
② Side wall
③ Wear indicator

WARNING

- **Do not use a tubeless tire on a wheel designed only for tube tires to avoid tire failure and personal injury from sudden deflation.**
- **When using a tube tire, be sure to install the correct tube.**
- **Always replace a new tube tire and a new tube as a set.**
- **To avoid pinching the tube, make sure that the wheel rim band and tube are centered in the wheel groove.**

° Patching a punctured tube is not recommended. If it is absolutely necessary to do so, use great care and replace the tube as soon as possible with a good quality replacement.

Tube wheel	Tubeless wheel
Tube tire only	Tube or tubeless tire

° After extensive tests, the tires listed below have been approved by Yamaha Motor Co., Ltd. for this model. Then front and rear tires should always be by the same manufacturer and of the same design. No guarantee concerning handling characteristics can be given if a tire combination other than one approved by Yamaha is used on this motorcycle.

Front tire:

Manufacturer	Type	Size
DUNLOP	130/90-16 67S	D404F

Rear tire:

Manufacturer	Type	Size
DUNLOP	170/80-15 M/C 77S	D404G

WARNING

° New tires have a relatilvely low grip on the road surface until they have been slightly worn.
Therefor, approximately 100 km (62.4 mi) should be traveled at normal speed before any highspeed riding is done.

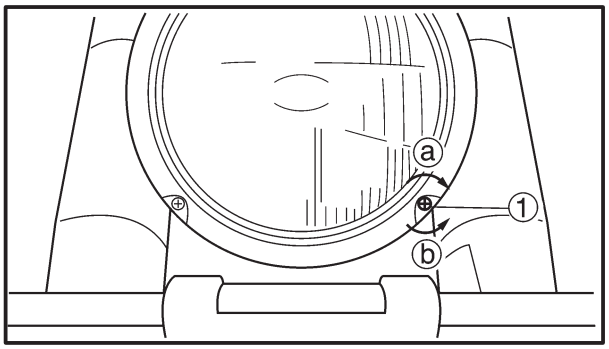

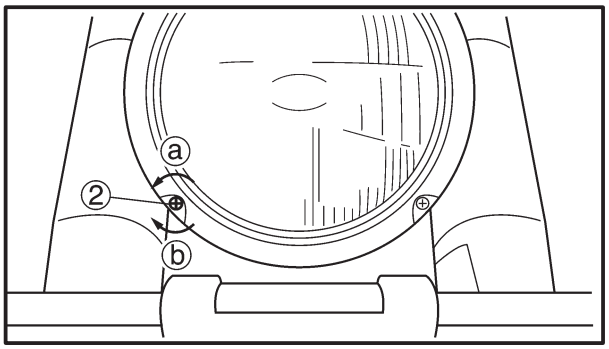

ELECTRICAL SYSTEM

EAS00184

ADJUSTING THE HEADLIGHT BEAM

1. Adjust:
   - headlight beam (vertically)

▼▼▼▼▼▼▼▼▼▼▼▼▼▼▼▼▼▼▼▼▼▼▼▼▼▼▼▼▼▼▼▼

a. Turn the adjusting screw ① in direction ⓐ or ⓑ.

Direction ⓐ →	**Headlight beam is raised.**
Direction ⓑ →	**Headlight beam is lowered.**

▲▲▲▲▲▲▲▲▲▲▲▲▲▲▲▲▲▲▲▲▲▲▲▲▲▲▲▲▲▲▲▲

2. Adjust:
   - headlight beam (horizontally)

▼▼▼▼▼▼▼▼▼▼▼▼▼▼▼▼▼▼▼▼▼▼▼▼▼▼▼▼▼▼▼▼

a. Turn the adjusting knob ② in direction ⓐ or ⓑ.

Direction ⓐ →	**Headlight beam moves to the right.**
Direction ⓑ →	**Headlight beam moves to the left.**

▲▲▲▲▲▲▲▲▲▲▲▲▲▲▲▲▲▲▲▲▲▲▲▲▲▲▲▲▲▲▲▲

CHASSIS

FRONT AND REAR BRAKES

FRONT BRAKE PADS

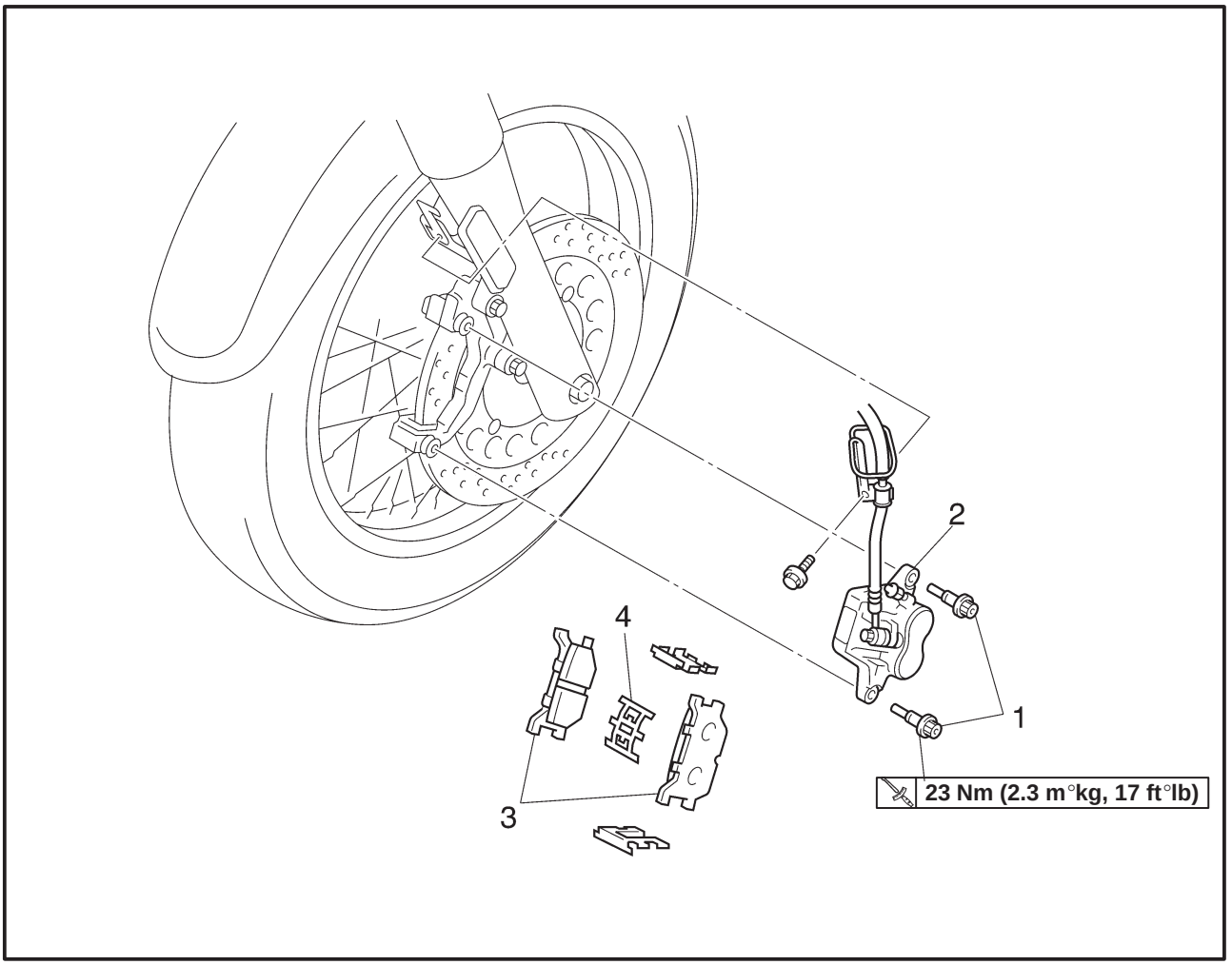

Order	Job/Part	Q'ty	Remarks
	Removing the front brake pads		Remove the parts in the order listed.
1	Retaining bolt	1	Refer to "REPLACING THE FRONT BRAKE PADS".
2	Brake caliper	1	
3	Brake pads	2	
4	Pad spring	1	
			For installation, reverse the removal procedure.

EAS00586

REAR BRAKE MASTER CYLINDER

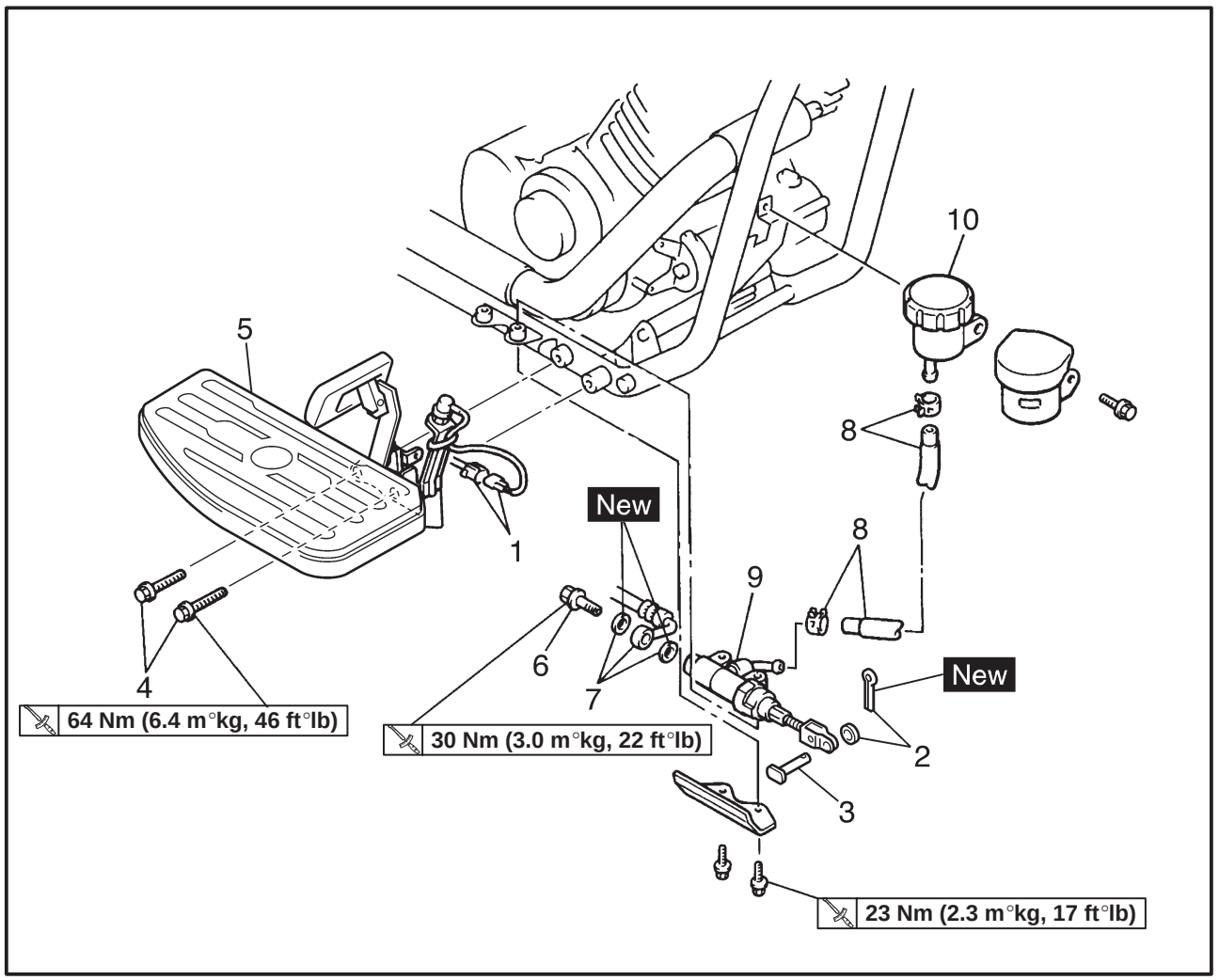

Order	Job/Part	Q'ty	Remarks
	Removing the rear brake master cylinder		Remove the parts in the order listed.
	Brake fluid		Drain
1	Brake switch connector	1	Disconnect
2	Cotter pin/washer	1/1	
3	Pin	1	
4	Bolts	2	
5	Brake pedal assembly	1	
6	Union bolt	1	Refer to "REMOVING/INSTALLING THE REAR BRAKE MASTER CYLINDER".
7	Copper washers/brake hose	2/1	
8	Clips/reservoir hose	2/1	
9	Master cylinder assembly	1	
10	Reservoir tank	1	
			For installation, reverse removal procedure.

FRONT BRAKE CALIPERS

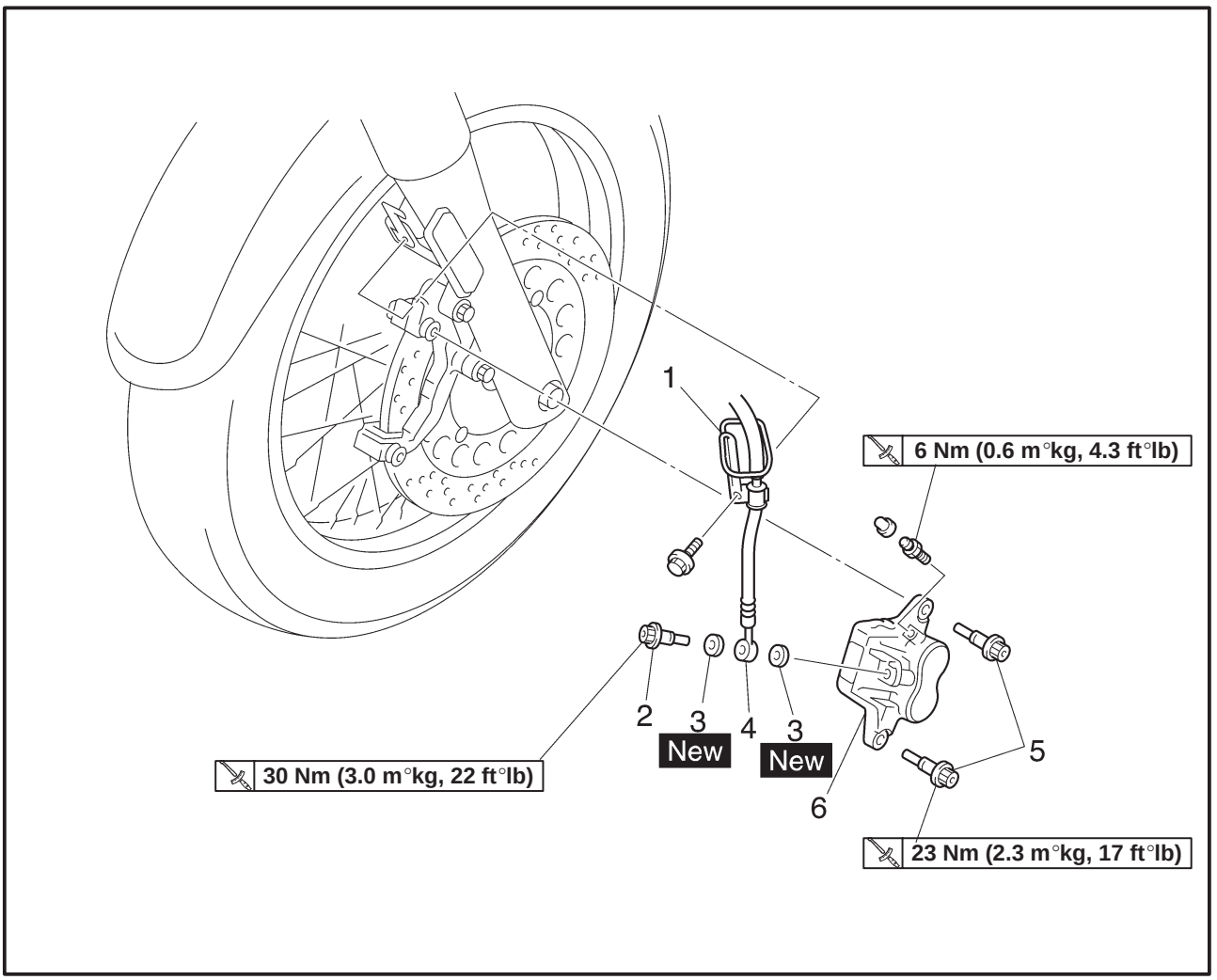

Order	Job/Part	Q'ty	Remarks
	Removing the front brake calipers		Remove the parts in the order listed.
	Brake fluid		Drain
1	Brake hose holder	1	
2	Union bolt	1	Refer to "REMOVING/INSTALLING THE FRONT BRAKE CALIPERS".
3	Copper washers	2	
4	Brake hose	1	
5	Retaining bolt	1	
6	Brake caliper assembly	1	
			For installation, reverse the removal procedure.

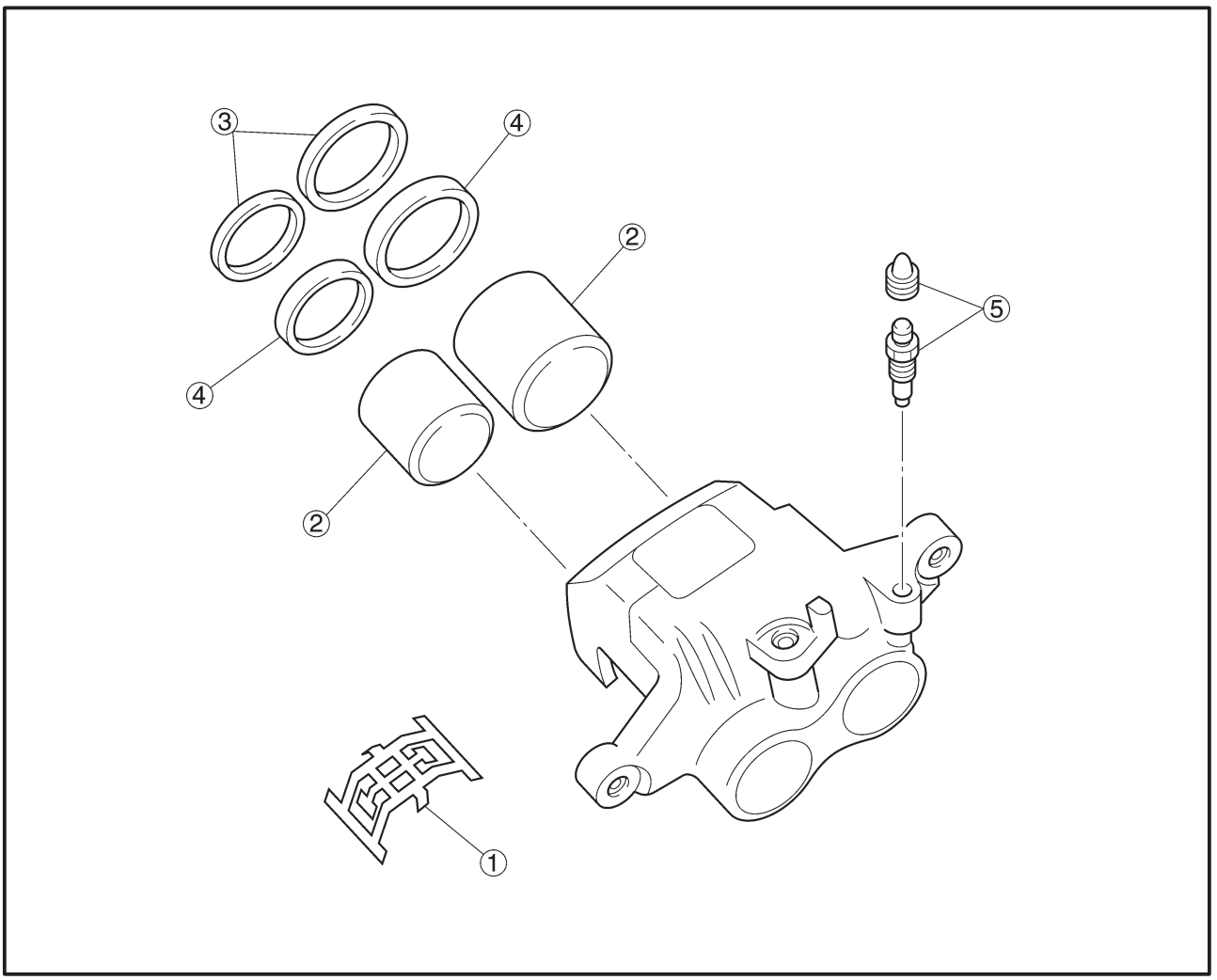

Order	Job/Part	Q'ty	Remarks
	Disassembling the front brake calipers		Remove the parts in the order listed.
①	Pad spring	1	
②	Brake caliper pistons	2	Refer to "REMOVING THE FRONT BRAKE CALIPERS".
③	Dust seals	2	
④	Caliper piston seals	2	
⑤	Bleed screw	1	
			For assembly, reverse the disassembly procedure.

FRONT FORK

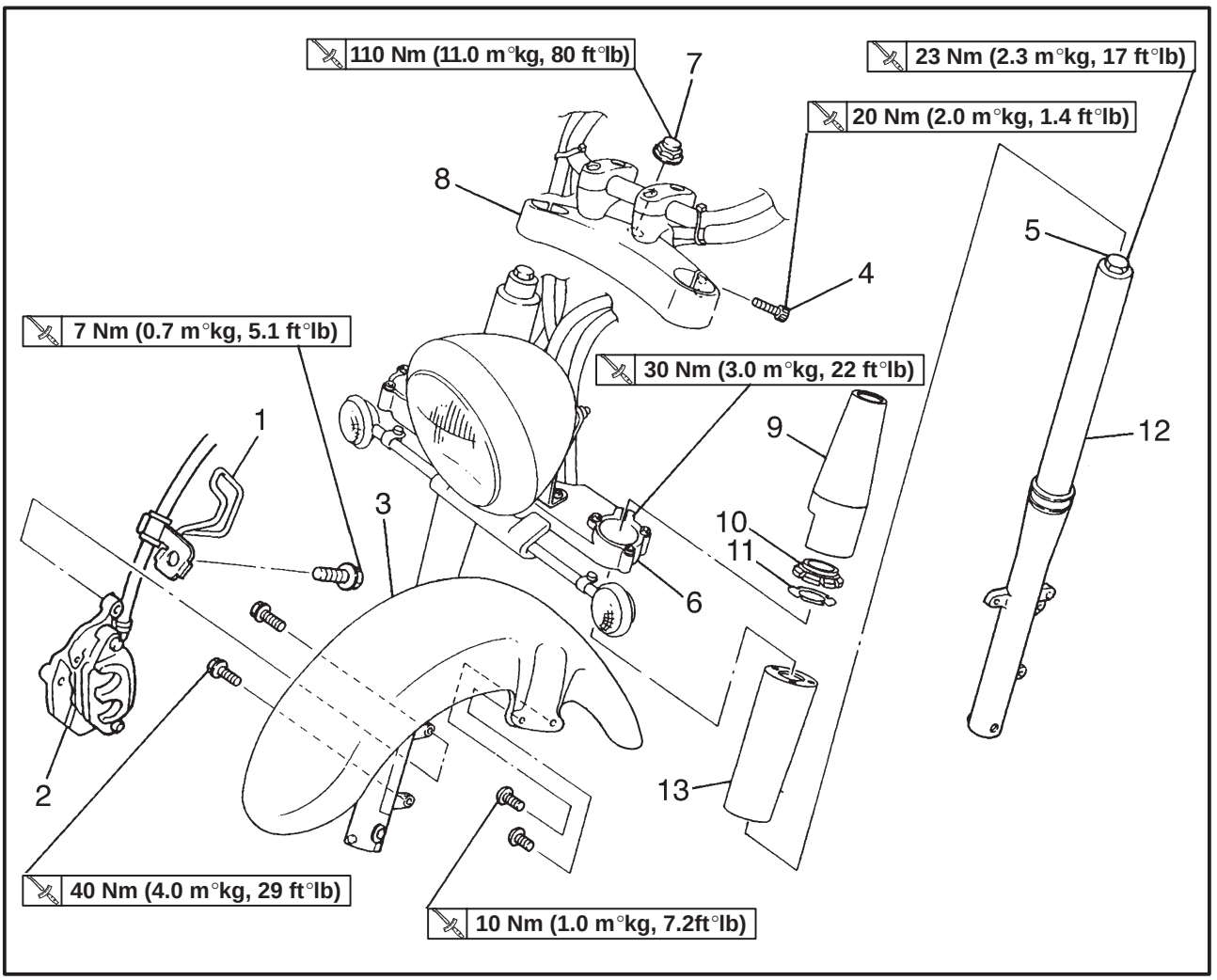

Order	Job/Part	Q'ty	Remarks
	Removing the front fork Front wheel		Remove the parts in the order listed. Refer to "FRONT WHEEL AND BRAKE DISCS".
1	Brake hose holders	2	
2	Brake caliper assembly	2	
3	Front fender	1	
4	Upper bracket bolts	2	Refer to "REMOVING/INSTALLING THE FRONT FORK LEGS".
5	Cap bolts	2	
6	Lower bracket bolts	2	
7	Steering stem nut	1	
8	Upper bracket with handle	1	

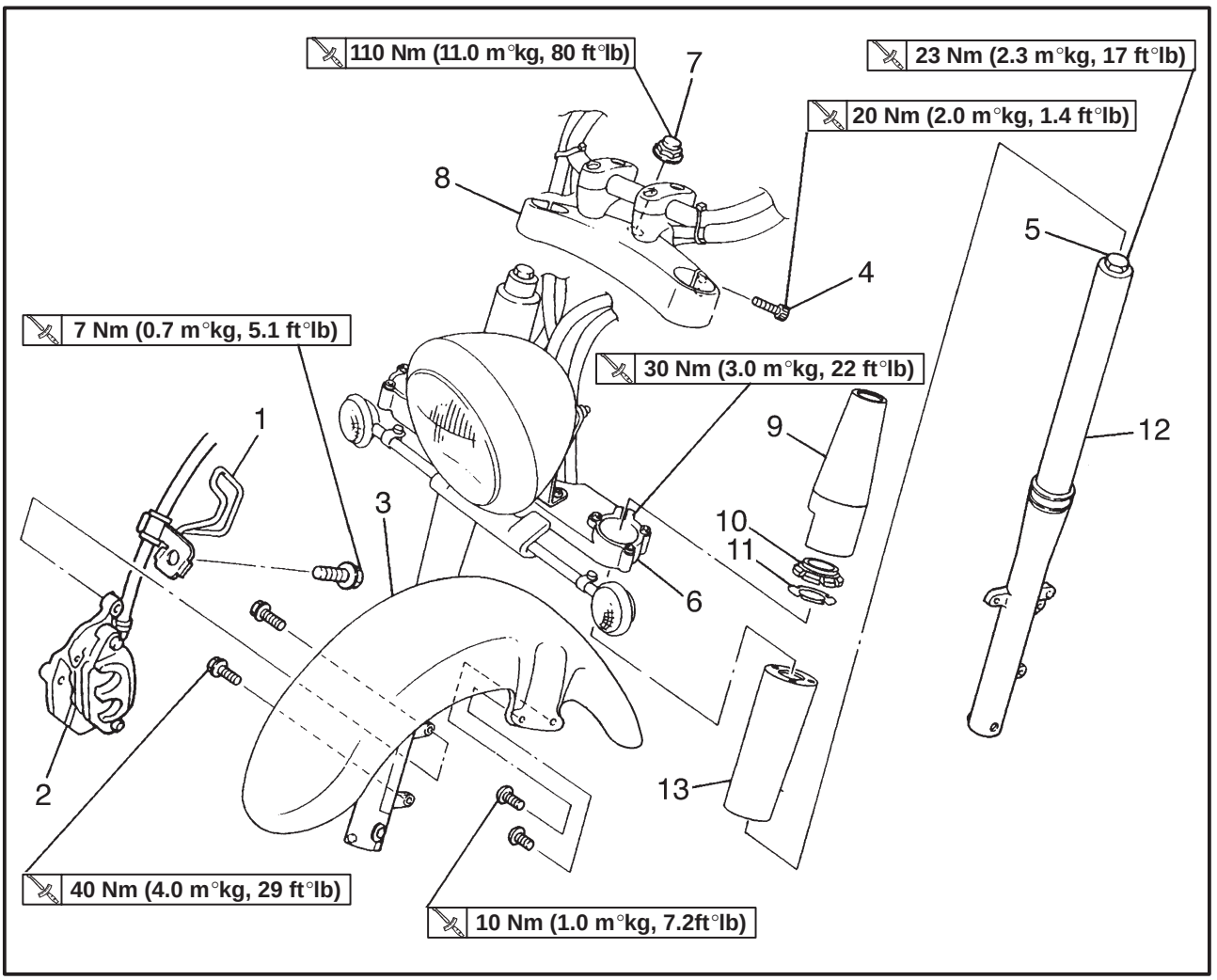

Order	Job/Part	Q'ty	Remarks
9	Upper fork covers	2	
10	Upper fork cover spacers	2	
11	Upper fork cover washers	2	
12	Front fork legs	2	
13	Lower fork covers	2	
			For installation, reverse the removal procedure.

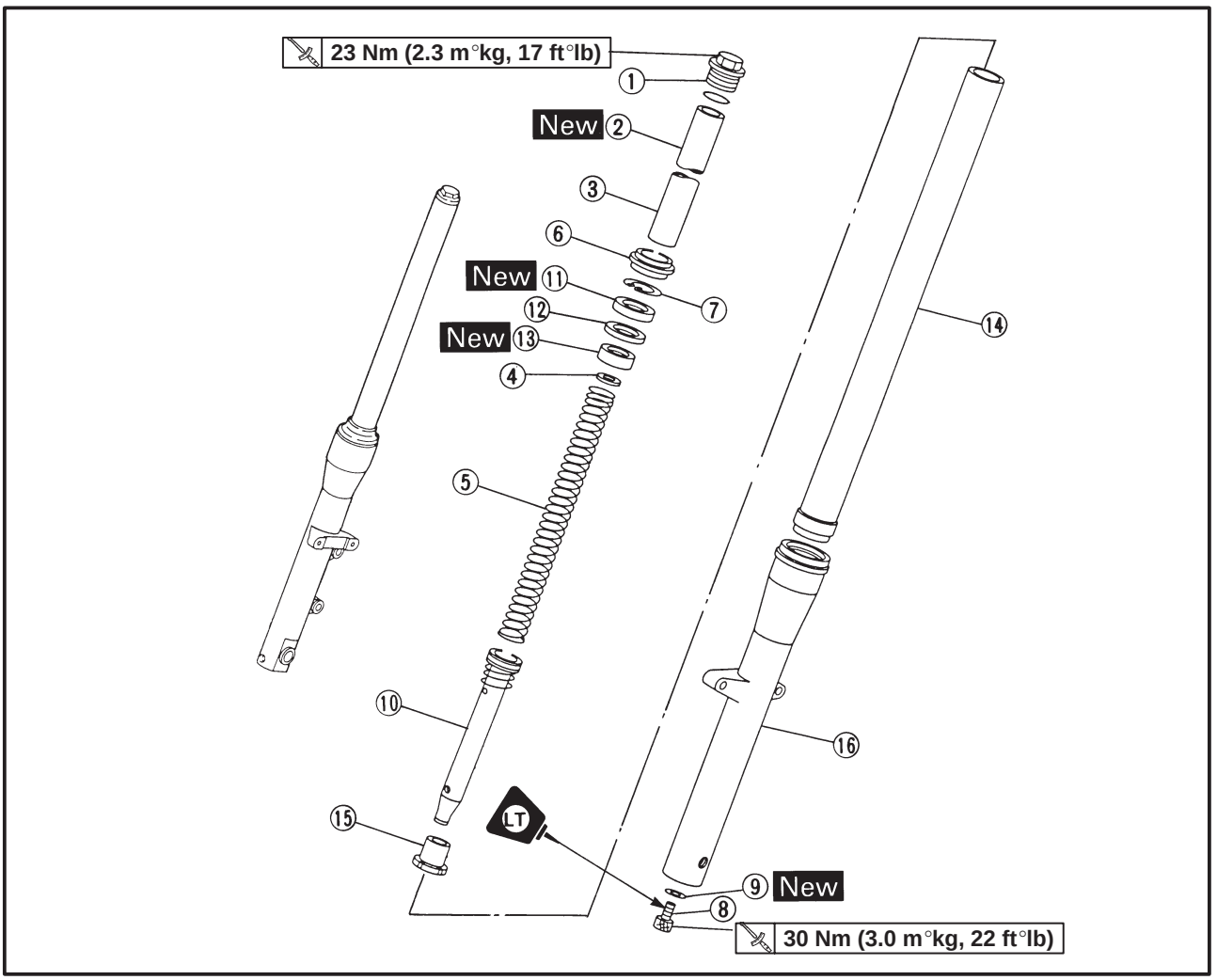

Order	Job/Part	Q'ty	Remarks
	Disassembling the front fork		Disassemble the parts in the order listed.
①	Cap bolt	1	Refer to "DISASSEMBLING/ASSEMBLING THE FRONT FORK LEGS".
②	O-ring	1	
③	Spacer	1	
④	Spring seat	1	
⑤	Fork spring	1	
⑥	Dust seal	1	
⑦	Oil seal clip	1	
⑧	Damper rod bolt	1	
⑨	Copper washer	1	
⑩	Damper rod/rebound spring	1/1	
⑪	Oil seal	1	

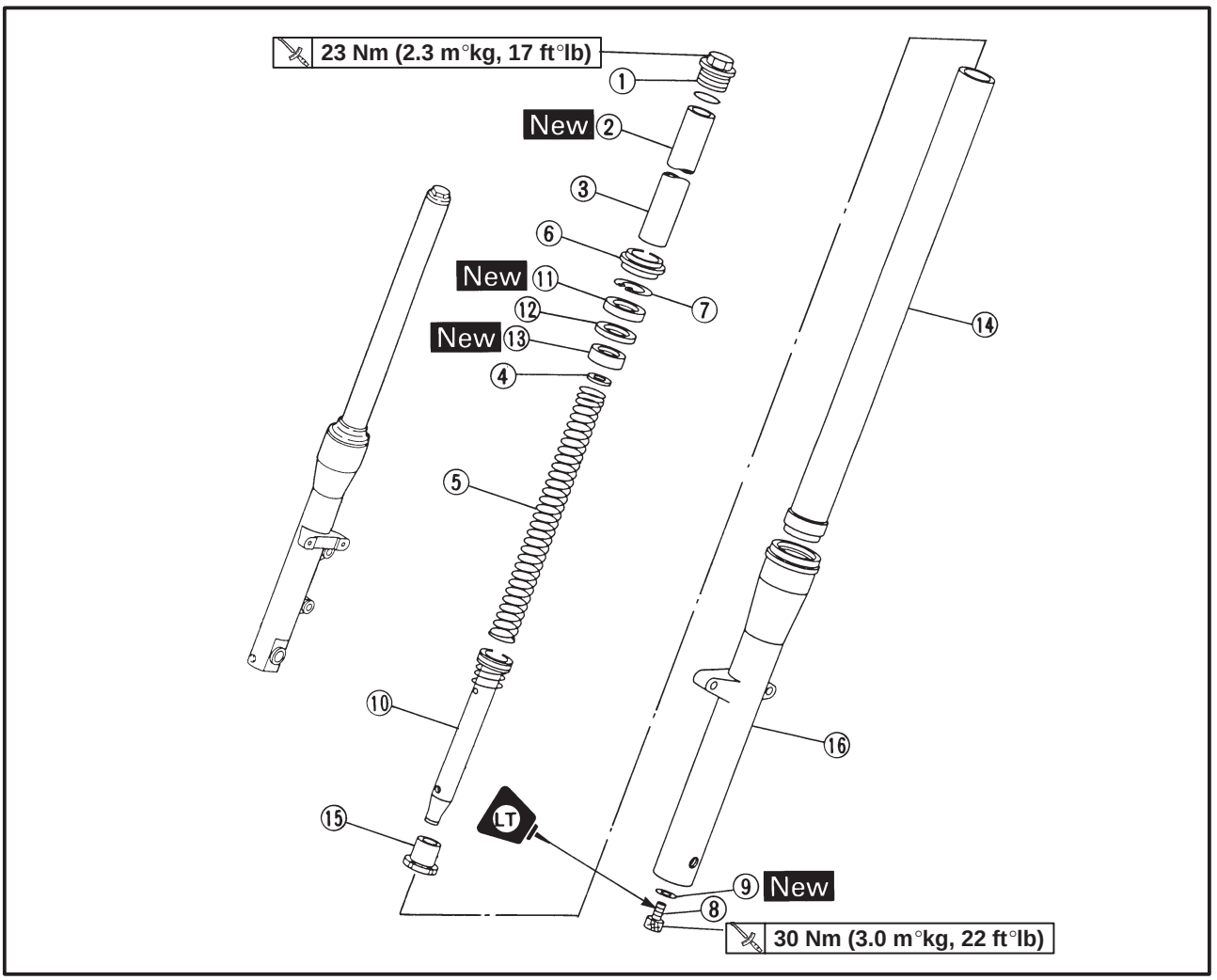

Order	Job/Part	Q'ty	Remarks
⑫	Seal spacer	1	Refer to "DISASSEMBLING/ASSEMBLING THE FRONT FORK LEGS".
⑬	Outer tube bushing	1	
⑭	Inner tube/inner tube bushing	1/1	
⑮	Oil lock piece	1	
⑯	Outer tube	1	
			For assembly, reverse the disassembly procedure.

EAS00649

REMOVING THE FRONT FORK LEGS

The following procedure applies to both of the front fork legs.

1. Stand the motorcycle on a level surface.

WARNING

Securely support the motorcycle so that there is no danger of it falling over.

NOTE:

Place the motocycle on a suitable stand so that the front wheel is elevated.

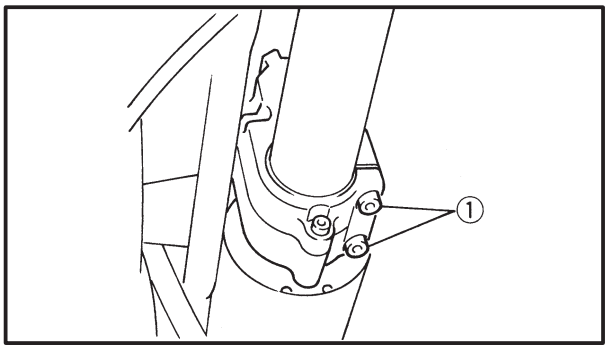

2. Remove:
   - upper bracket
     Refer to “STEERING HEAD”
3. Loosen:
   - lower bracket pinch bolt ①

WARNING

Before loosening the upper and lower bracket pinch bolts, support the front fork leg.

4. Remove:
   - front fork leg

EAS00653

DISASSEMBLING THE FRONT FORK LEGS

The following procedure applies to both of the front fork legs.

1. Remove:
   - cap bolt
   - O-ring
   - spacer
   - spring seat
   - fork spring
2. Drain
   - fork oil
3. Remove:
   - dust seal ①
   - oil seal clip ②
     (with a flat-head screwdriver)

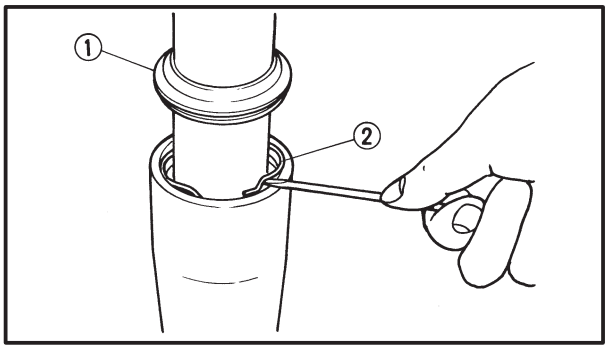

CAUTION:

Do not scratch the inner tube.

NOTE:

- Do not remove the front fork leg protector from the outer tube.
- If the front fork leg protector must be removed, always install a new one.

4. Remove:
   - damper rod bolt
   - copper washer

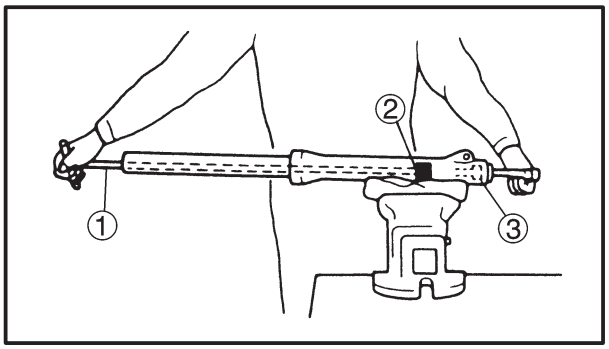

NOTE:

While holding the damper rod with the T-handle ① and damper rod holder ②, loosen the damper rod bolt ③.

T-handle
YM-01326, 90890-01326
Damper rod holder
YM-1300-1, 90890-01460

6. Remove:
   - inner tube

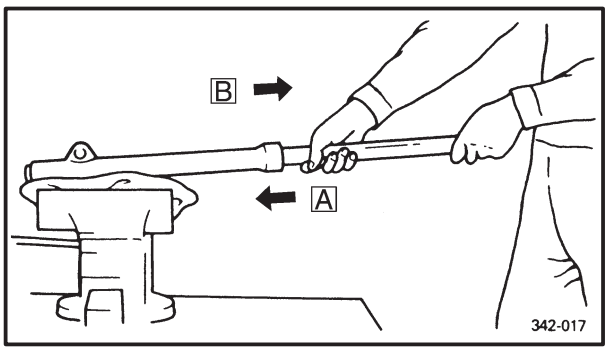

a. Hold the front fork leg horizontally.
b. Slowly push A the inner tube into the outer tube and just before it bottoms out, pull B the inner tube back quickly.
c. Repeat this step until the inner tube separates from the outer tube.

EAS00657

CHECKING THE FRONT FORK LEGS

The following procedure applies to both of the front fork legs.

1. Check:
   - inner tube ①
   - outer tube ②

   Bends/damage/scratches → Replace.

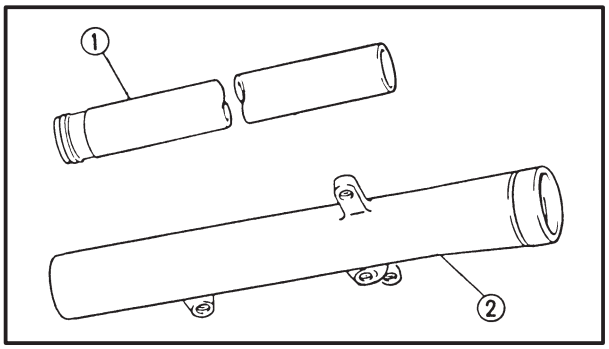

WARNING

Do not attempt to straighten a bent inner tube as this may dangerously weaken it.

2. Measure:
   - spring free length ⓐ

   Over the specified limit → Replace.

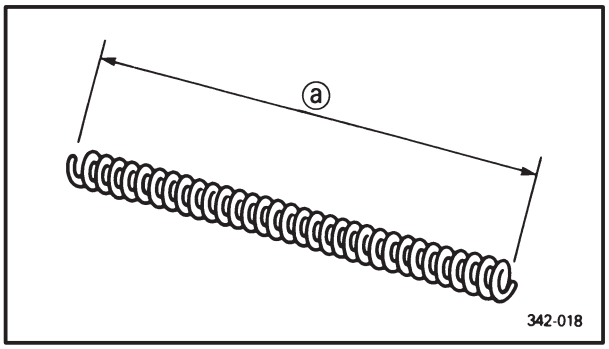

Spring free length limit
361.9 mm (14.25 in)

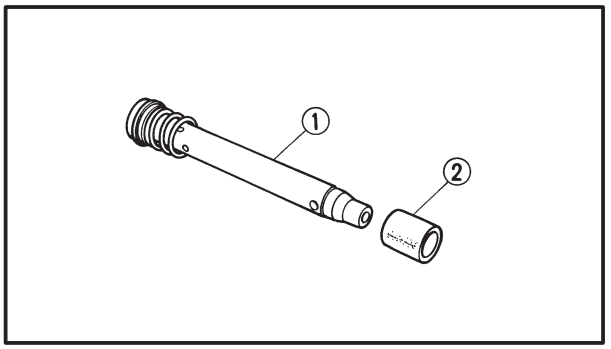

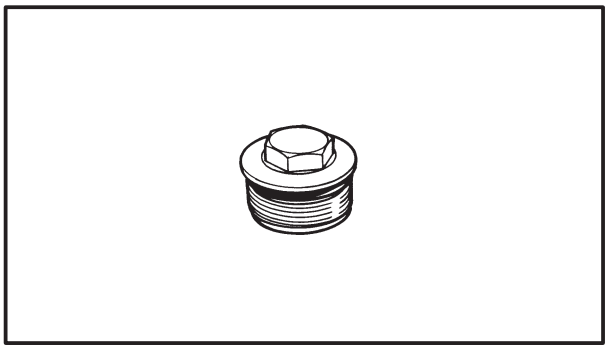

3. Check:
   - damper rod ①
     Damage/wear → Replace.
     Obstruction → Blow out all of the oil passages with compressed air.
   - oil lock piece ②
     Damage → Replace.

WARNING

When disassembling and assembling the front fork leg, do not allow any foreign material to enter the front fork.

4. Check:
   - cap bolt
   - O-ring
     Damage/wear → Replace.

EAS00659

ASSEMBLING THE FRONT FORK LEGS

The following procedure applies to both of the front fork legs.

WARNING

- **Make sure that the oil levels both front fork legs are equal.**
- **Uneven oil levels can result in poor handling and a loss of stability.**

NOTE:

- When assembling the front fork leg, be sure to replace the following parts:
  –inner tube bushing
  –outer tube bushing
  –oil seal
  –dust seal
- Before assembling the front fork leg, make sure that all of the components are clean.

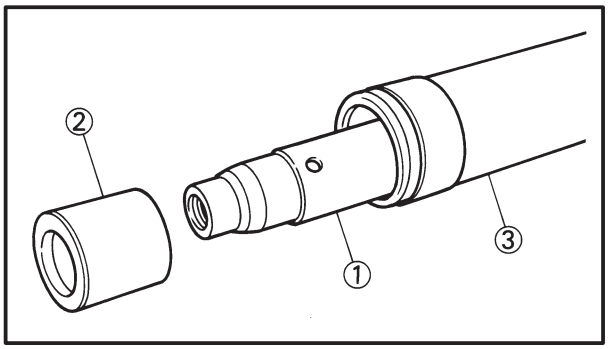

1. Install:
   - damper rod ①
   - oil lock piece ②

WARNING

Always use new copper washers.

CAUTION:

Allow the damper rod to slide slowly down the inner tube ③ until it protrudes from the bottom of the inner tube. Be careful not to damage the inner tube.

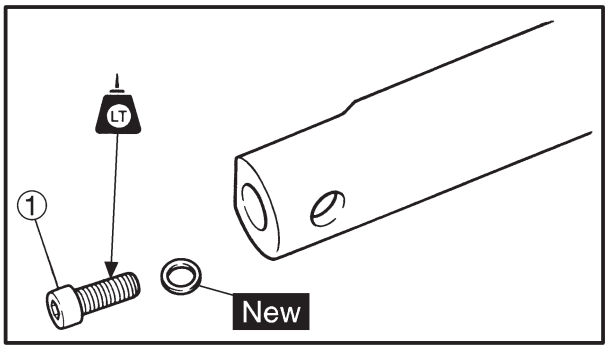

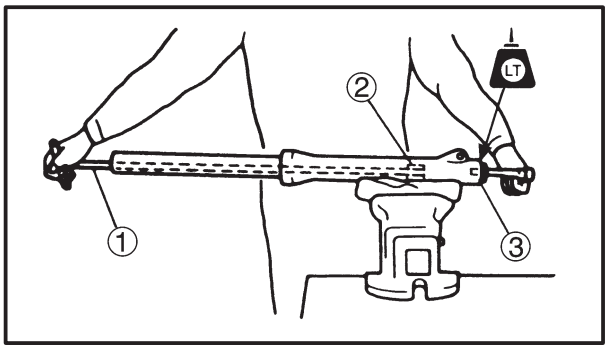

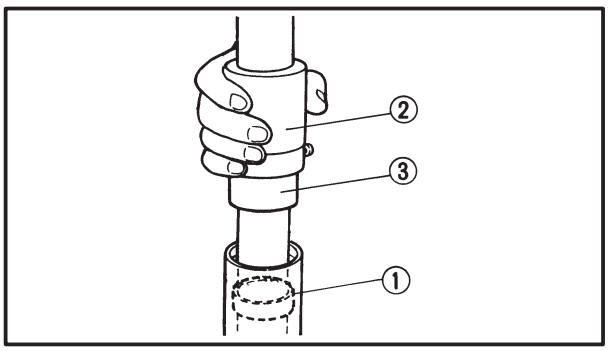

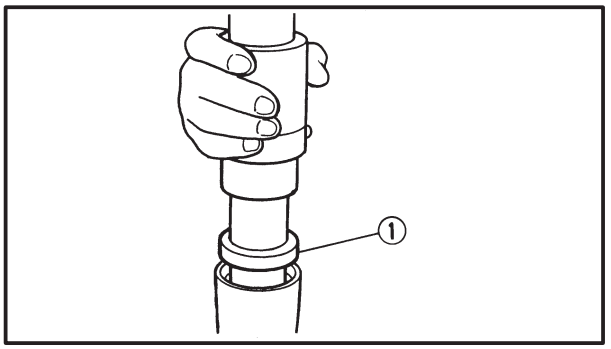

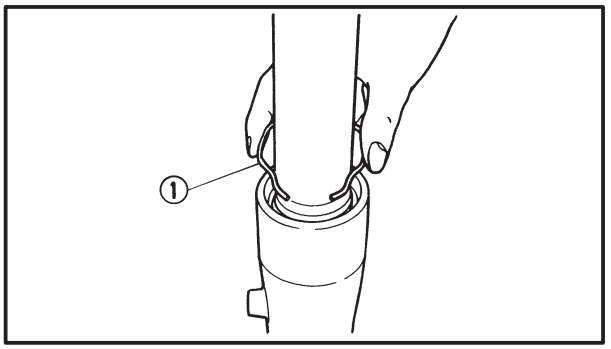

2. Lubricate:
   - inner tube's outer surface

Recommended lubricant
Yamaha fork and shock oil
10 W or equivalent

3. Tighten:
   - damper rod bolt ①

30 Nm (3.0 m·kg, 22 ft·lb)

NOTE:

While holding the damper rod with the T-handle ① and damper rod holder ②, tighten the damper rod bolt ③.

T-handle
YM-01326, 90890-01326
Damper rod holder
YM-1300-1, 90890-01460

4. Install:
   - outer tube bushing ①
   - seal spacer
     (with the fork seal driver weight ② and adapter ③)

Fork seal driver weight
YM-33963, 90890-01367
Adapter
YM-33968, 90890-01381

5. Install:
   - oil seal ①
     (with the fork seal driver weight and adapter)

CAUTION:

Make sure that the numbered side of the oil seal faces up.

NOTE:

- Before installing the oil seal, apply lithium soap base grease onto its lips.

6. Install:
   - oil seal clip ①

NOTE:

Adjust the oil seal clip so that it fits into the outer tube groove.

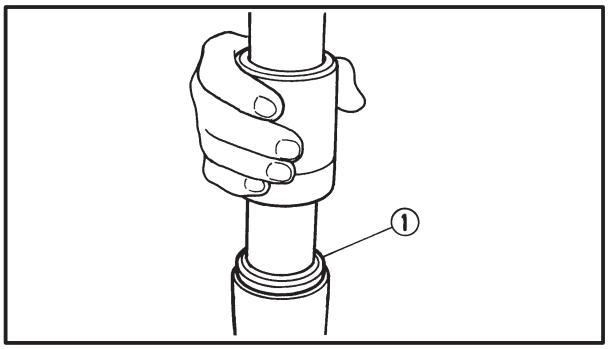

7, Install:
- dust seal ①
  (with the fork seal driver weight)

8. Fill:
- front fork leg
  (with the specified amount of the recommended fork oil)

Quantity (each front fork leg)
0.464 L (464 cm³, 16.4 Imp oz, 15.7 US oz)
Recommended oil
Yamaha fork and shock oil 10W or equivalent

CAUTION:

- **Be sure to use the recommended fork oil. Other oils may have an adverse effect on front fork performance.**
- **When disassembling and assembling the front fork leg, do not allow any foreign material to enter the front fork.**

9. After filling the front fork leg, slowly stroke the inner tube up and down (at least ten times) to distribute the fork oil.

NOTE:

Be sure to stroke the inner tube slowly because the fork oil may spurt out.

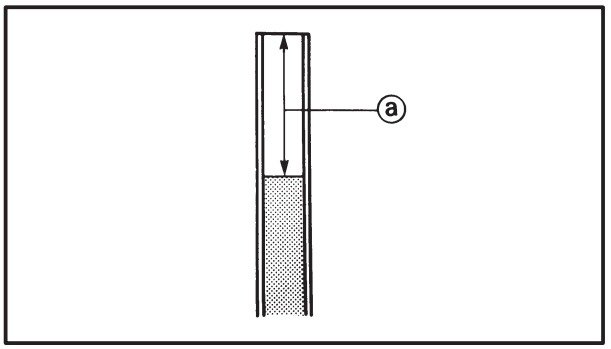

10. Measure:
- front fork leg oil level ⓐ
  Out of specification → Correct.

Front fork leg oil level (from the top of the inner tube, with the inner tube fully compressed, and without the spring)
108 mm (4.25 in)

NOTE:

Hold the fork in an upright position.

11. Install:
- fork spring
- spring seat
- spacer
- O-ring
- cap bolt

NOTE:

- Install the fork spring with its smaller pitch upword.
- Before installing the cap bolt, apply grease to the O-ring.
- Temporarily tighten the cap bolt.

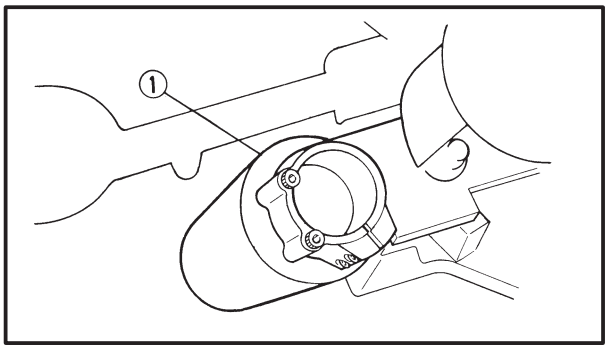

INSTALLING THE FRONT FORK LEGS

1. Install:
   Lower fork covers ①
   - Front forks
     Temporarily tighten the lower bracket pinch bolts.

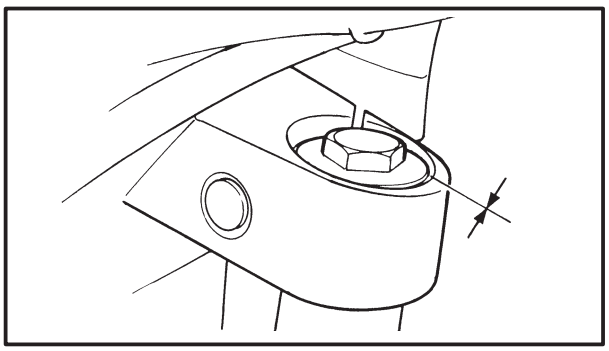

2. Tighten:
   - Upper bracket
   - Steering stem nut

	110 Nm (11.0 m·kg, 80 ft·lb)

NOTE:

- When aligning the fork tubes do not install the upper fork covers.
- Make sure that the inner tube end is flush with the top of the handlebar crown.

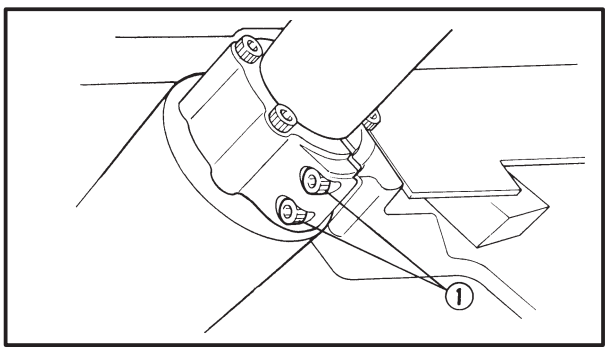

3. Tighten
   - Lower bracket pinch bolts

	30 Nm (3.0 m·kg, 22 ft·lb)

   - Cap bolts

	23 Nm (2.3 m·kg, 17 ft·lb)

4. Remove:
   - Steering stem nut
   - Upper bracket

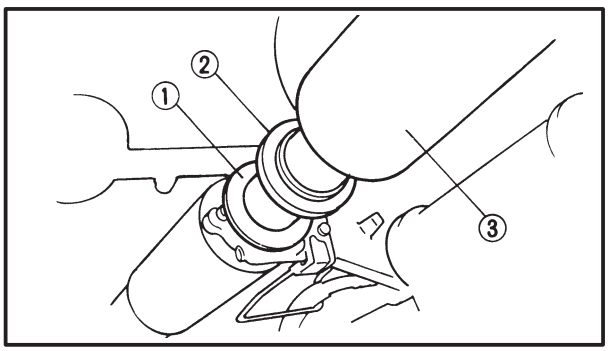

5. Install:
   - Upper fork cover washers ①
   - Upper fork cover spacers ②
   - Upper fork covers ③

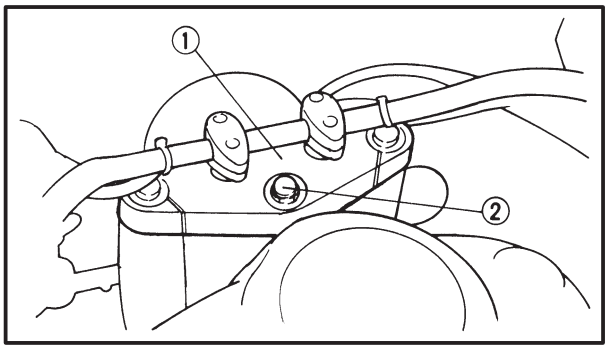

6. Install:
   - Upper bracket ①
   - Steering stem nut ②

110 Nm (11.0 m°kg, 80 ft°lb)

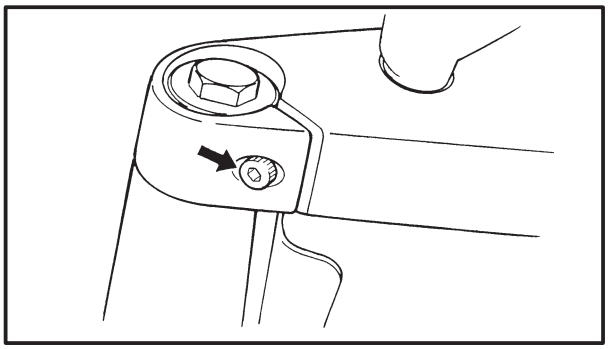

7. Tighten:
   - Upper bracket pinch bolts

20 Nm (2.0 m°kg, 1.4 ft°lb)

STEERING HEAD

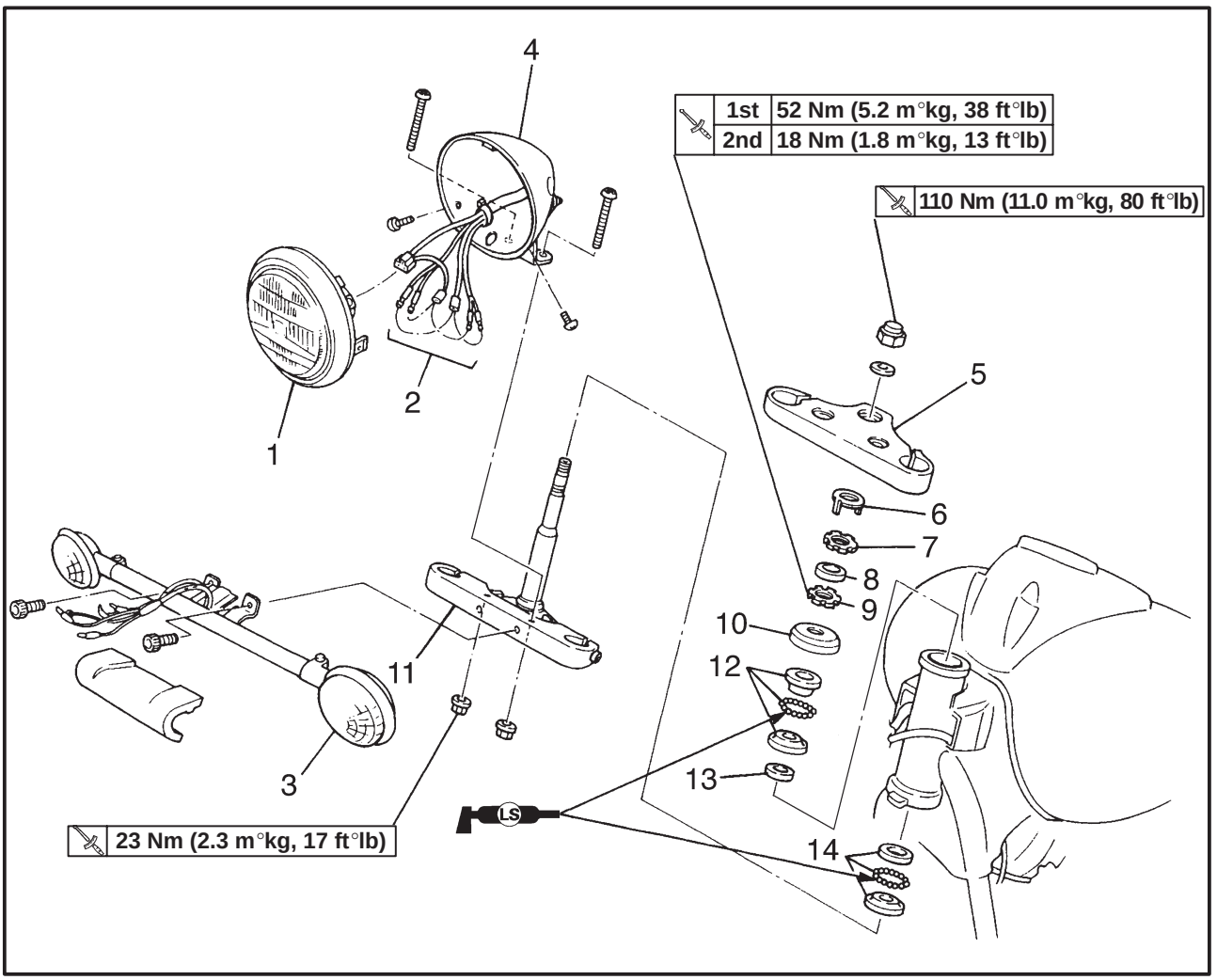

Order	Job/Part	Q'ty	Remarks
	Removing the lower bracket		Remove the parts in the order listed. Stand the motorcycle on a level surface. **⚠ WARNING** **Securely support the motorcycle so that there is no danger of it falling over.**
	Front fork legs		Refer to "FRONT FORK".
	Handlebar		Refer to "HANDLEBAR".
1	Headlight lens unit	1	
2	Leads (in the headlight body)	–	Disconnect
3	Front turn signal/position light	1	
4	Headlight body	1	
5	Upper bracket	1	
6	Lock washer	1	
7	Upper ring nut	1	

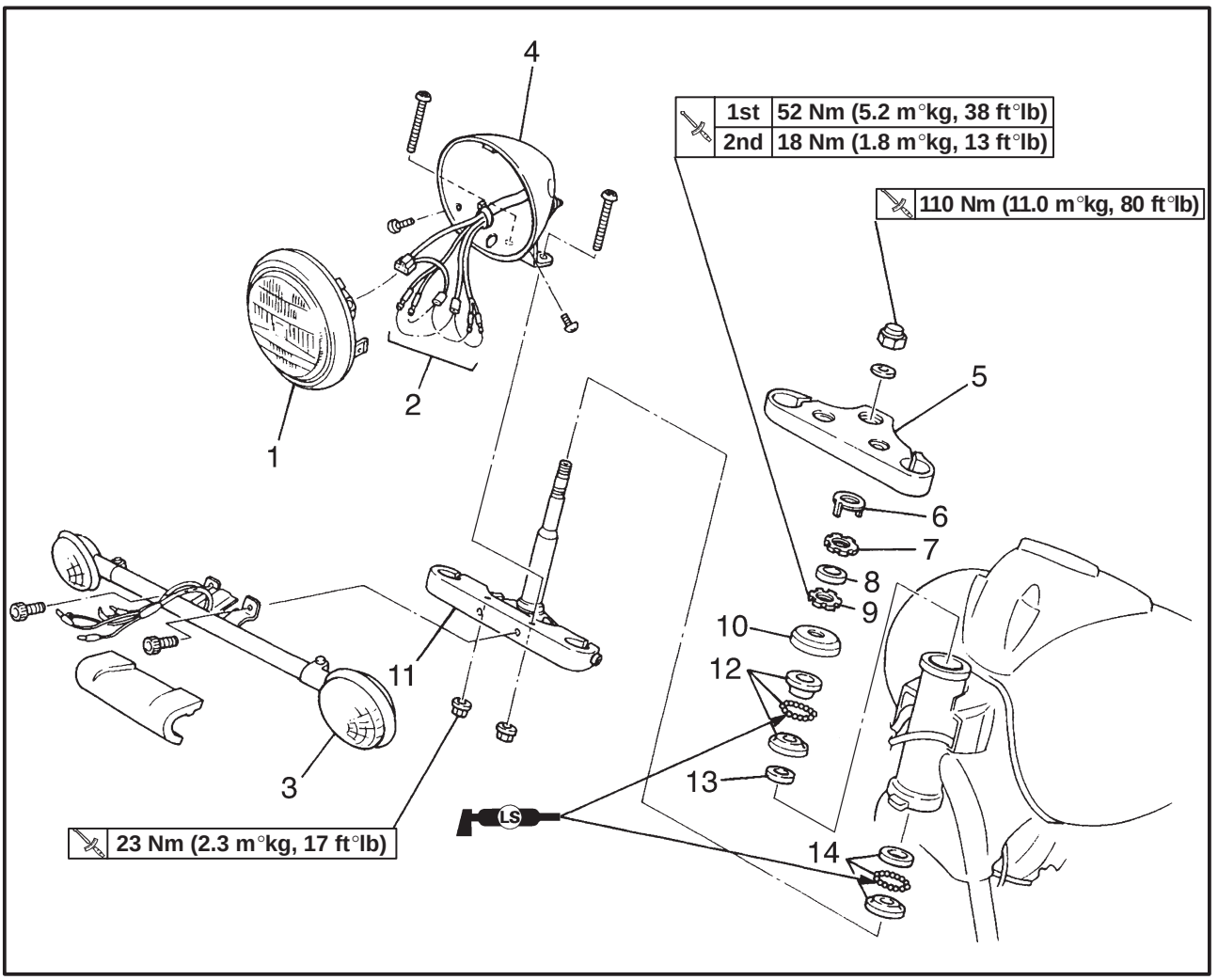

Order	Job/Part	Q'ty	Remarks
8	Rubber washer	1	
9	Lower ring nut	1	Refer to "REMOVING THE LOWER BRACKET/INSTALLING THE STEERING HEAD".
10	Bearing cover	1	
11	Lower bracket	1	
12	Bearing (upper)	1	
13	Rubber seal	1	
14	Bearing (lower)	1	
			For installaiton, reverse the removal procedure.

EAS00007

HOW TO USE THIS MANUAL

This manual is intended as a handy, easy-to-read reference book for the mechanic. Comprehensive explanations of all installation, removal, disassembly, assembly, repair and check procedures are laid out with the individual steps in sequential order.

① The manual is divided into chapters. An abbreviation and symbol in the upper right corner of each page indicate the current chapter.
Refer to "SYMBOLS".

② Each chapter is divided into sections. The current section title is shown at the top of each page, except in Chapter 3 ("PERIODIC CHECKS AND ADJUSTMENTS"), where the sub-section title(s) appears.

③ Sub-section titles appear in smaller print than the section title.

④ To help identify parts and clarify procedure steps, there are exploded diagrams at the start of each removal and disassembly section.

⑤ Numbers are given in the order of the jobs in the exploded diagram. A circled number indicates a disassembly step.

⑥ Symbols indicate parts to be lubricated or replaced.
Refer to "SYMBOLS".

⑦ A job instruction chart accompanies the exploded diagram, providing the order of jobs, names of parts, notes in jobs, etc.

⑧ Jobs requiring more information (such as special tools and technical data) are described sequentially.

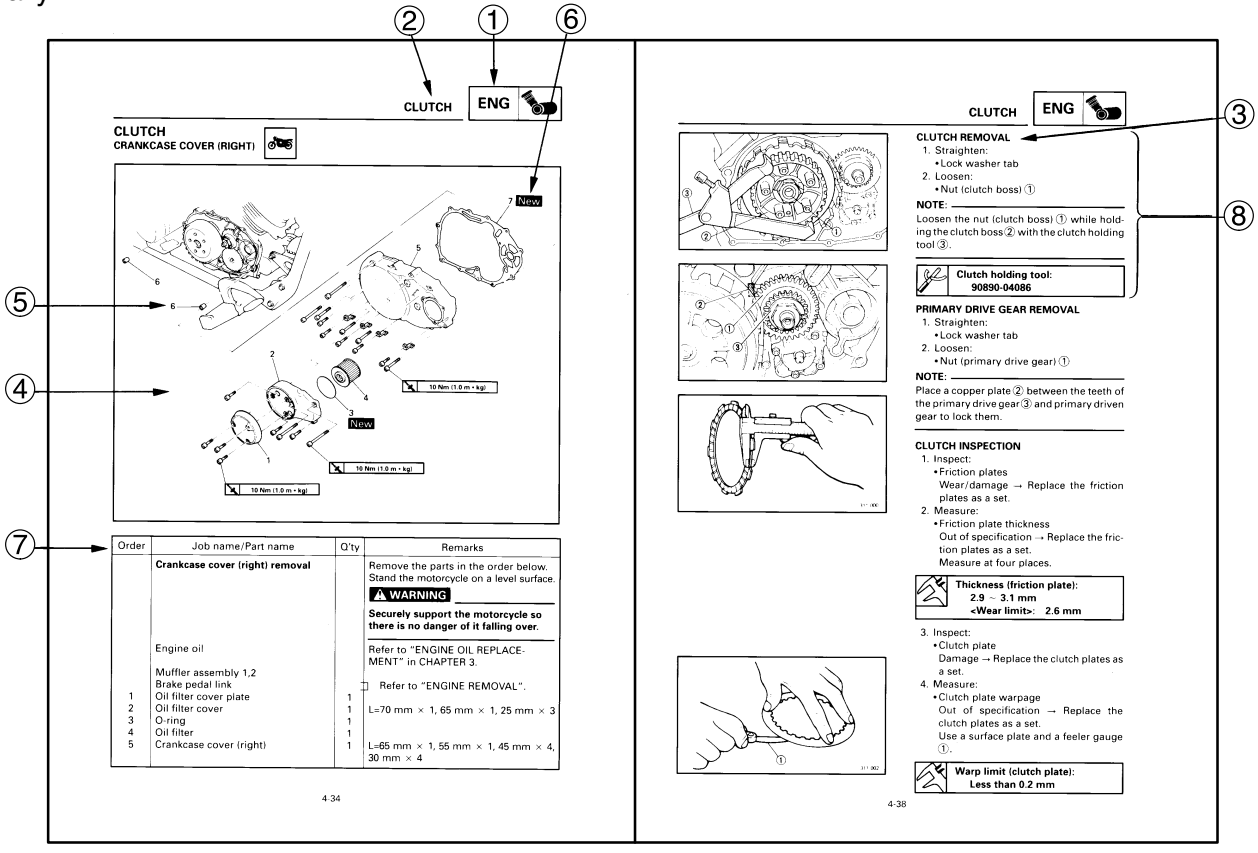

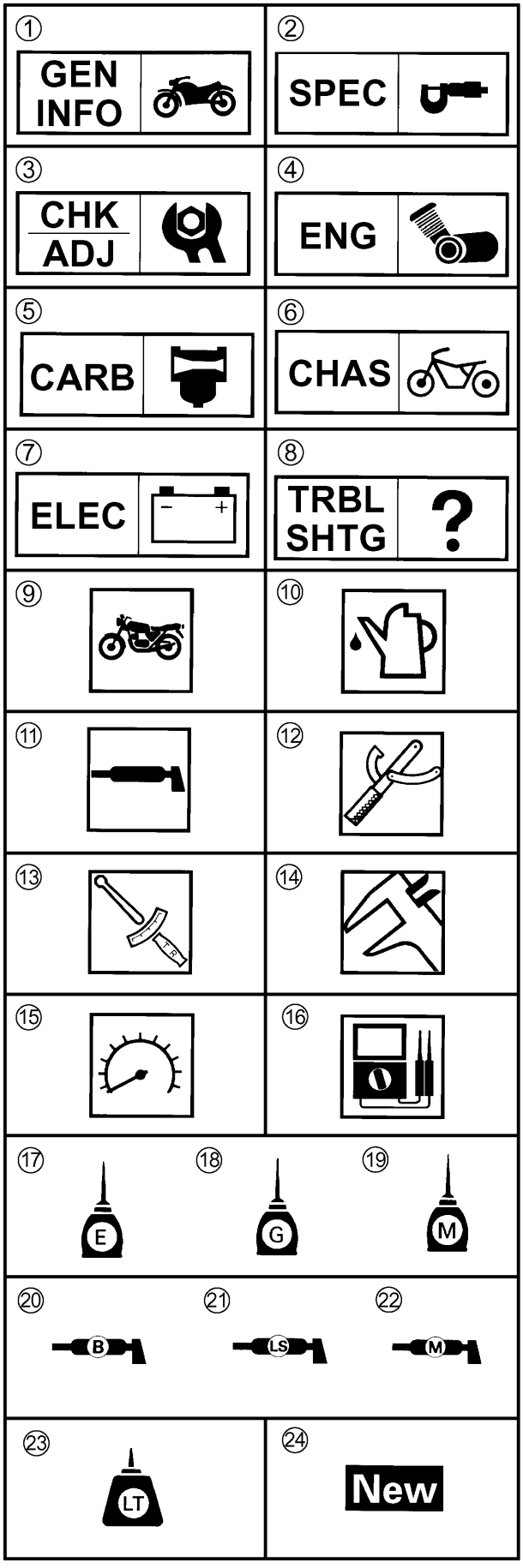

EB003000

ILLUSTRATED SYMBOLS

The following symbols are not relevant to every vehicle.

Symbols ① to ⑧ indicate the subject of each chapter.

① General information
② Specifications
③ Periodic checks and adjustments
④ Engine
⑤ Carburetor
⑥ Chassis
⑦ Electrical system
⑧ Troubleshooting

Symbols ⑨ to ⑯ indicate the following.

⑨ Serviceable with engine mounted
⑩ Filling fluid
⑪ Lubricant
⑫ Special tool
⑬ Tightening torque
⑭ Wear limit, clearance
⑮ Engine speed
⑯ Electrical data

Symbols ⑰ to ㉒ in the exploded diagrams indicate the types of lubricants and lubrication points.

⑰ Engine oil
⑱ Gear oil
⑲ Molybdenum-disulfide oil
⑳ Wheel-bearing grease
㉑ Lithium-soap-based grease
㉒ Molybdenum-disulfide grease

Symbols ㉓ to ㉔ in the exploded diagrams indicate the following.

㉓ Apply locking agent (LOCTITE®)
㉔ Replace the part

CONTENTS

SPECIFICATIONS
GENERAL SPECIFICATIONS 1
MAINTENANCE SPECIFICATIONS 2
ENGINE 2
CHASSIS 3
ELECTRICAL 4

PERIODIC CHECKS AND ADJUSTMENTS
INTRODUCTION 6
PERIODIC MAINTENANCE CHART FOR EMISSION CONTROL SYSTEM 6
GENERAL MAINTENANCE AND LUBRICATION CHART 6

CARBURETOR
CARBURETOR 9
CHECKING THE FUEL CUT SOLENOID 11

ELECTRICAL
CARBURETOR HEATER SYSTEM 12
CIRCUIT DIAGRAM 12
TROUBLE SHOOTING 13
SELF-DIAGNOSIS 16
TROUBLE SHOOTING 18

XVS11AWV/XVS11ATV/XVS1100ASC/XVS1100ATSC
WIRING DIAGRAM (for US and CAL)

SPECIFICATIONS

GENERAL SPECIFICATIONS

Item	Standard
Model code:	XVS1100ASC : 5YS1 (For CAL) XVS1100ATSC : 5YS4 (For CAL) XVS1100ATTC : 5YSD (For CAL) XVS1100AWTC : 5YS9 (For CAL) XVS11ATV : 5YSM (For U.S.A.) XVS11ATVC : 5YSN (For CAL) XVS11AWV : 5YSH (For U.S.A.) XVS11AWVC : 5YSJ (For CAL)
Basic weight With oil and fuel Maximum load	 XVS1100ASC/XVS1100ATSC/XVS1100ATTC/ XVS1100AWTC/XVS11ATVC/XVS11AWVC : 288.0 kg (635 lb) XVS11ATV/XVS11AWV : 285.0 kg (628 lb) XVS1100ASC/XVS1100ATSC/XVS1100ATTC/ XVS1100AWTC/XVS11ATVC/XVS11AWVC : 200 kg (441 lb) XVS11ATV/XVS11AWV : 203 kg (448 lb)

MAINTENANCE SPECIFICATIONS
ENGINE

Item	Standard	Limit
Final gear oil:		
Type	SAE80 API GL-4 Hypoid gear oil	•••
Quantity	0.19 L (0.20 US qt) (0.17 Imp.qt)	•••
Carburetor:		
Type × quantity	BSR37 × 2	•••
Manufacturer	MIKUNI	•••
ID mark	5YS1 00	•••
Main jet	#1:#112.5 #2:#115	•••
Main air jet	#55	•••
Jet needle	5DL43-53-1	•••
Needle jet	P-0M	•••
Pilot air jet 1	#63.8	•••
Pilot air jet 2	#145	•••
Pilot outlet	1	•••
Pilot jet	#17.5	•••
Bypass 1	0.8	•••
Bypass 2	0.8	•••
Bypass 3	0.8	•••
Valve seat size	1.2	•••
Starter jet 1	#42.5	•••
Starter jet 2	0.8	•••
Throttle valve size	#125	•••
Fuel level	4–5 mm (0.16–0.20 in)	•••

CHASSIS

Item	Standard	Limit
Front suspension:		
Type	Telescopic fork	•••
Spring/shock absorber type	Coil spring/oil damper	•••
Shock absorber travel	140.0 mm (5.51 in)	•••
Fork spring free length	371.9 mm (14.64 in)	•••
Collar length	183.0 mm (7.20 in)	•••
Installed length	334.4 mm (13.17 in)	•••
Spring rate K1	4.40 N/mm (25.12 lb/in) (0.45 kgf/mm)	•••
Spring rate K2	6.30 N/mm (35.97 lb/in) (0.64 kgf/mm)	•••
Spring stroke K1	0.0–77.5 mm (0.00–3.05 in)	•••
Spring stroke K2	77.5–140.0 mm (3.05–5.51 in)	•••
Inner tube outer diameter	41.0 mm (1.61 in)	•••
Optional spring available	No	•••
Recommended oil	Yamaha fork oil 10WT	•••
Quantity	488.0 cm^3 (16.50 US oz) (17.21 Imp.oz)	•••
Level	99.0 mm (3.90 in)	•••

ELECTRICAL

Item	Standard	Limit
TCI:		
Pickup coil resistance	189–231 Ω Gray–Black	•••
TCI unit model/manufacturer	J4T145/MITSUBISHI	•••
Battery:		
Model	GT14B-4	•••
Voltage, capacity	12 V, 12.0 Ah	•••
Specific gravity	1.32	•••
Manufacturer	GS YUASA	•••
Ten hour rate amperage	1.20 A	•••
Bulb voltage, wattage × quantity:		
Headlight	12 V, 60 W/55.0 W × 1	•••
Tail/brake light	12 V, 8.0 W/27.0 W × 1	•••
Front turn signal/position light	XVS1100ASC/XVS1100ATSC :	
	12 V, 27 W/8.0 W × 2	•••
	XVS1100ATTC/XVS1100AWTC/ XVS11ATV/XVS11ATVC/XVS11AWV/ XVS11AWVC :	
	12 V, 23 W/8.0 W × 2	•••
Rear turn signal light	XVS1100ASC/XVS1100ATSC :	
	12 V, 27.0 W × 2	•••
	XVS1100ATTC/XVS1100AWTC/ XVS11ATV/XVS11ATVC/XVS11AWV/ XVS11AWVC :	
	12 V, 21.0 W × 2	•••
Meter lighting	14 V, 1.4 W × 2	•••
Starting circuit cut-off relay:		
Model/manufacturer	G8R-30Y-U0/OMRON	•••
Coil resistance	162–198 Ω	•••
Fuel pump relay:		
Model/manufacturer	G8R-30Y-U0/OMRON	•••
Coil resistance	162–198 Ω	•••

Item	Standard	Limit
Fuses:		
Main fuse	30.0 A	•••
Headlight fuse	15.0 A	•••
Signaling system fuse	10.0 A	•••
Ignition fuse	10.0 A	•••
Backup fuse	5.0 A	•••
Carburetor heater fuse	15.0 A	•••
Ignitor unit fuse	5.0 A	•••
Reserve fuse	30.0 A	•••
Reserve fuse	15.0 A	•••
Reserve fuse	10.0 A	•••
Reserve fuse	5.0 A	•••

EB300000

PERIODIC CHECKS AND ADJUSTMENTS

INTRODUCTION

This chapter includes all information necessary to perform recommended checks and adjustments. If followed, these preventive maintenance procedures will ensure more reliable vehicle operation, a longer service life and reduce the need for costly overhaul work. This information applies to vehicles already in service as well as to new vehicles that are being prepared for sale. All service technicians should be familiar with this entire chapter.

EB301000

PERIODIC MAINTENANCE CHART FOR EMISSION CONTROL SYSTEM

No.		ITEM	ROUTINE	INITIAL	ODOMETER READINGS				
				600 mi (1000 km) or 1 month	4000 mi (7000 km) or 6 months	8000 mi (13000 km) or 12 months	12000 mi (19000 km) or 18 months	16000 mi (25000 km) or 24 months	20000 mi (31000 km) or 30 months
1	*	**Fuel line**	• Check fuel hoses for cracks or damage. • Replace if necessary.		√	√	√	√	√
2	*	**Fuel filter**	• Replace.						Replace.
3		**Spark plugs**	• Check condition. • Adjust gap and clean. • Replace every 8000 mi (13000 km) or 12 months.		√	Replace.	√	Replace.	√
4	*	**Valve clearance**	• Check and adjust valve clearance when engine is cold.	√	√	√	√	√	√
5	*	**Crankcase breather system**	• Check breather hose for cracks or damage. • Replace if necessary.		√	√	√	√	√
6	*	**Carburetor synchronization**	• Adjust synchronization of carburetors.	√	√	√	√	√	√
7	*	**Idle speed**	• Check and adjust engine idle speed.		√	√	√	√	√
8	*	**Exhaust system**	• Check for leakage. • Tighten if necessary. • Replace gasket(s) if necessary.		√	√	√	√	√
9	*	**Evaporative emission control system (For California only)**	• Check control system for damage. • Replace if necessary.				√		

* Since these items require special tools, data and technical skills, they should be serviced by a Yamaha dealer.

GENERAL MAINTENANCE AND LUBRICATION CHART

No.		ITEM	ROUTINE	INITIAL	ODOMETER READINGS				
				600 mi (1000 km) or 1 month	4000 mi (7000 km) or 6 months	8000 mi (13000 km) or 12 months	12000 mi (19000 km) or 18 months	16000 mi (25000 km) or 24 months	20000 mi (31000 km) or 30 months
1	*	**Air filter element**	• Clean with compressed air. • Replace if necessary.		√	√	√	√	√
2	*	**Clutch**	• Check operation. • Adjust or replace cable.	√	√	√	√	√	√
3	*	**Front brake**	• Check operation, fluid level, and for fluid leakage. • Replace brake pads if necessary.	√	√	√	√	√	√
4	*	**Rear brake**	• Check operation, fluid level, and for fluid leakage. • Replace brake pads if necessary.	√	√	√	√	√	√

No.		ITEM	ROUTINE	INITIAL	ODOMETER READINGS				
				600 mi (1000 km) or 1 month	4000 mi (7000 km) or 6 months	8000 mi (13000 km) or 12 months	12000 mi (19000 km) or 18 months	16000 mi (25000 km) or 24 months	20000 mi (31000 km) or 30 months
5	*	Brake hoses	• Check for cracks or damage.		√	√	√	√	√
			• Replace.	Every 4 years					
6	*	Wheels (XVS11V)	• Check runout, spoke tightness and for damage. • Tighten spokes if necessary.		√	√	√	√	√
7	*	Wheels (XVS11AWV /XVS11ATV)	• Check runout and for damage. • Replace if necessary.		√	√	√	√	√
8	*	Tires	• Check tread depth and for damage. • Replace if necessary. • Check air pressure. • Correct if necessary.		√	√	√	√	√
9	*	Wheel bearings	• Check bearings for smooth operation. • Replace if necessary.		√	√	√	√	√
10	*	Swingarm pivot bearings	• Check bearing assemblies for looseness. • Moderately repack with lithium-soap-based grease.			√		Repack.	
11	*	Steering bearings	• Check bearing assemblies for looseness. • Moderately repack with lithium-soap-based grease every 16000 mi (25000 km) or 24 months.	√	√	√	√	Repack.	√
12	*	Chassis fasteners	• Check all chassis fitting and fasteners. • Correct if necessary.		√	√	√	√	√
13		Brake and clutch lever pivot shafts	• Apply lithium-soap-based grease (all-purpose grease) lightly.		√	√	√	√	√
14		Brake and shift pedal pivot shafts	• Apply lithium-soap-based grease (all-purpose grease) lightly.		√	√	√	√	√
15		Sidestand pivot	• Check operation. • Apply lithium-soap-based grease (all-purpose grease) lightly.		√	√	√	√	√
16	*	Sidestand switch	• Check operation and replace if necessary.	√	√	√	√	√	√
17	*	Front fork	• Check operation and for oil leakage. • Replace if necessary.		√	√	√	√	√
18	*	Shock absorber assembly	• Check operation and for oil leakage. • Replace if necessary.		√	√	√	√	√
19	*	Rear suspension link pivots	• Apply lithium-soap-based grease lightly.					√	
20		Engine oil	• Change (warm engine before draining).	√	√	√	√	√	√
21	*	Engine oil filter element	• Replace.	√		√		√	
22		Final gear oil	• Check oil level and for oil leakage. • Change at initial 600 mi (1000 km) or 1 month, and thereafter every 16000 mi (25000 km) or 24 months.	Change.	√	√	√	Change.	√
23	*	Control cables	• Apply Yamaha chain and cable lube or engine oil SAE 10W-30 thoroughly.	√	√	√	√	√	√
24	*	Throttle grip housing and cable	• Check operation and free play. • Adjust the throttle cable free play if necessary. • Lubricate the throttle grip housing and cable.		√	√	√	√	√

* Since these items require special tools, data and technical skills, they should be serviced by a Yamaha dealer.

NOTE:

From 24000 mi (37000 km) or 36 months, repeat the maintenance intervals starting from 8000 mi (13000 km) or 12 months.

EAU00477

NOTE:

- The air filter needs more frequent service if you are riding in unusually wet or dusty areas.
- Hydraulic brake service
  - After disassembling the brake master cylinders and calipers, always change the fluid. Regularly check the brake fluid levels and fill the reservoirs as required.
  - Every two years replace the internal components of the brake master cylinders and calipers, and change the brake fluid.
  - Replace the brake hoses every four years and if cracked or damaged.

CARBURETOR

CARBURETOR

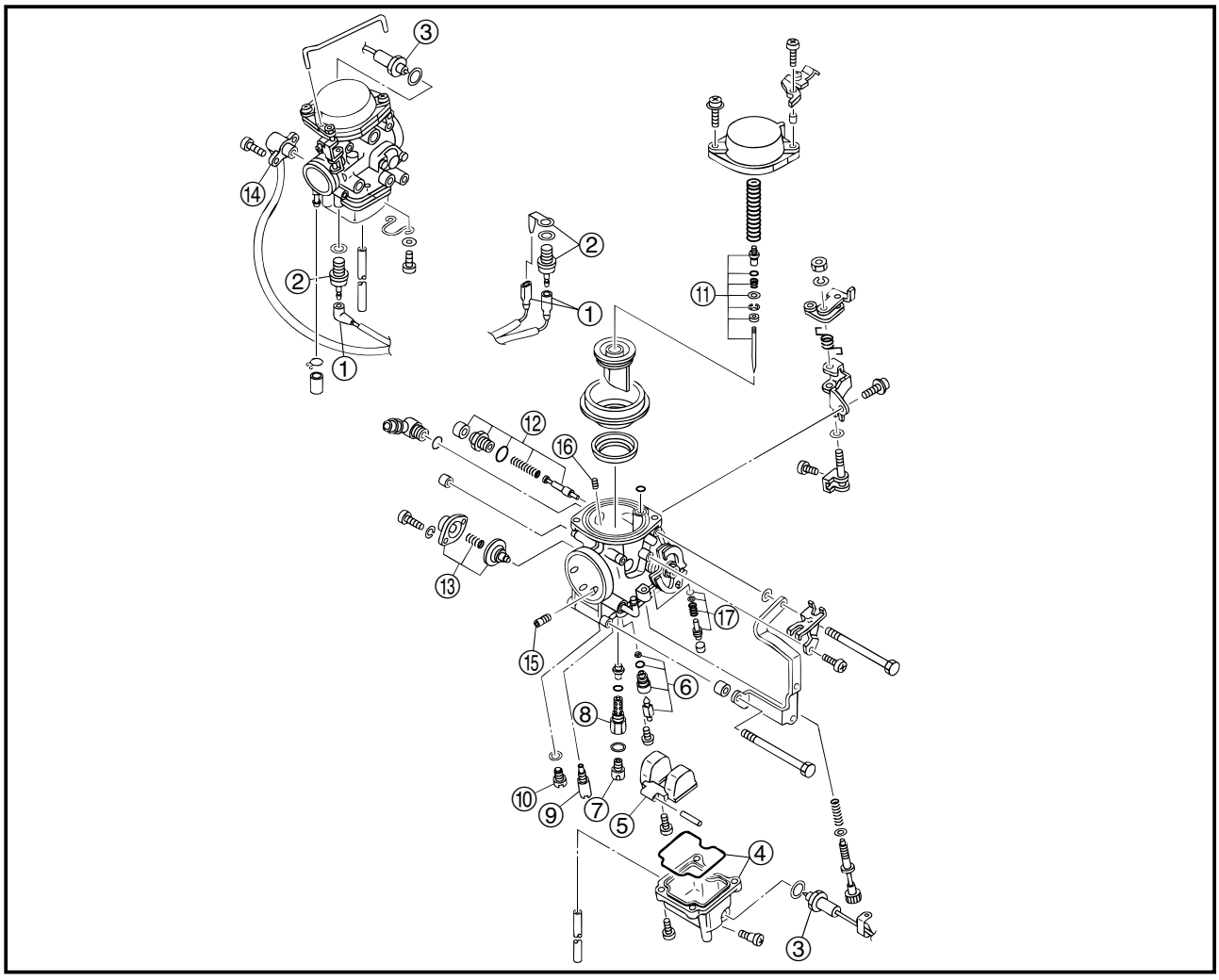

Order	Job name/Part name	Q´ty	Remarks
	Disassembling the carburetor.		Disassemble the parts in the order listed.
①	Carburetor heater leads	2	
②	Carburetor heaters	2	12V 30W
③	Fuel cut solenoid valve	2	
④	Float chamber/gasket	1/1	
⑤	Float	1	
⑥	Needle valve set	1	
⑦	Main jet	1	
⑧	Jet holder	1	
⑨	Pilot jet	1	Refer to “CARBURETOR ASSEMBLY” in 5EL-28197-E0 Chapter 5.
⑩	Starter jet	1	
⑪	Jet needle set	1	
⑫	Starter plunger set	1	

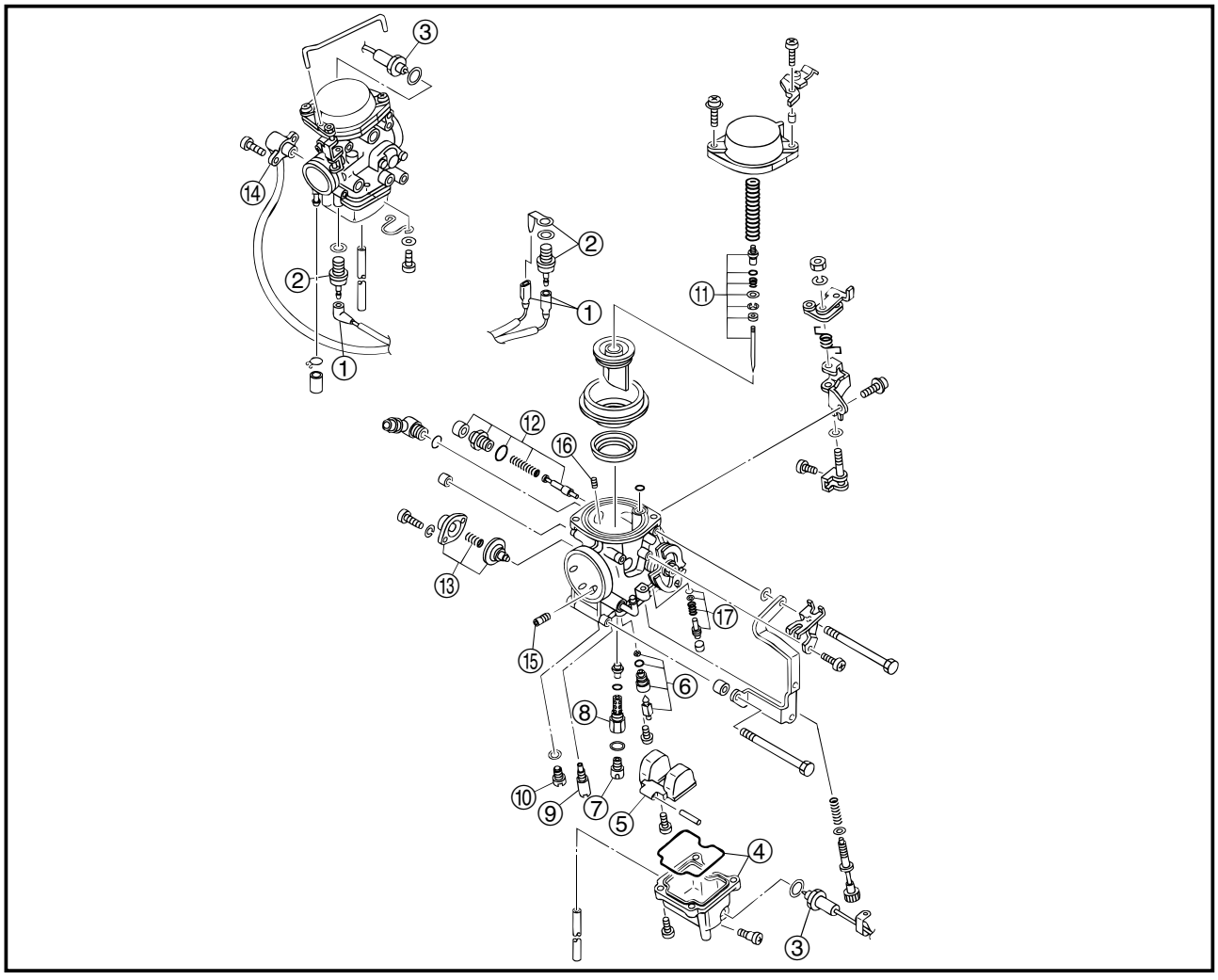

Order	Job name/Part name	Q´ty	Remarks
⑬	Diaphragm set	1	Refer to “ASSEMBLING THE CARBURE TORS” in 5EL-28197-E0 Chapter 5.
⑭	Throttle position sensor	1	Refer to “CHECKING AND ADJUSTING THE THROTTLE POSITION SENSOR (TPS)” in 5EL-28197-E0 Chapter 5.
⑮	Main air jet	1	
⑯	Pilot air jet 2	1	
⑰	Throttle stop screw set	1	
			For assembly, reverse the disassembly procedure.

CHECKING THE FUEL CUT SOLENOID

1. Check:
- fuel cut solenoid valve

a. Disconnect the fuel cut solenoid valve coupler from the wireharness.
b. Remove the fuel cut solenoid valve from the carburetor.
c. Connect the pocket tester (Ω × 1k) to the terminals of the fuel cut solenoid valve coupler and fuel cut solenoid body. (ground)

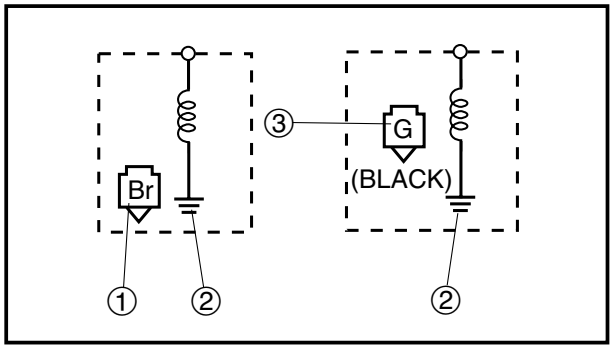

Fuel cut solenoid valve #1
Positive (+) pocket tester probe → brown terminal ①
Negative (–) pocket tester probe → ground ②
Fuel cut solenoid valve #2
Positive (+) pocket tester probe → green terminal ③
Negative (–) pocket tester probe → ground ②

d. Measure the fuel cut solenoid valve resistance.
Out of specification → Replace the fuel cut solenoid valve.

Fuel cut solenoid valve resistance
12 Ω at 20°C (68°F)
(brown – ground)
(green – ground)

ELECTRICAL

CARBURETOR HEATER SYSTEM

CIRCUIT DIAGRAM

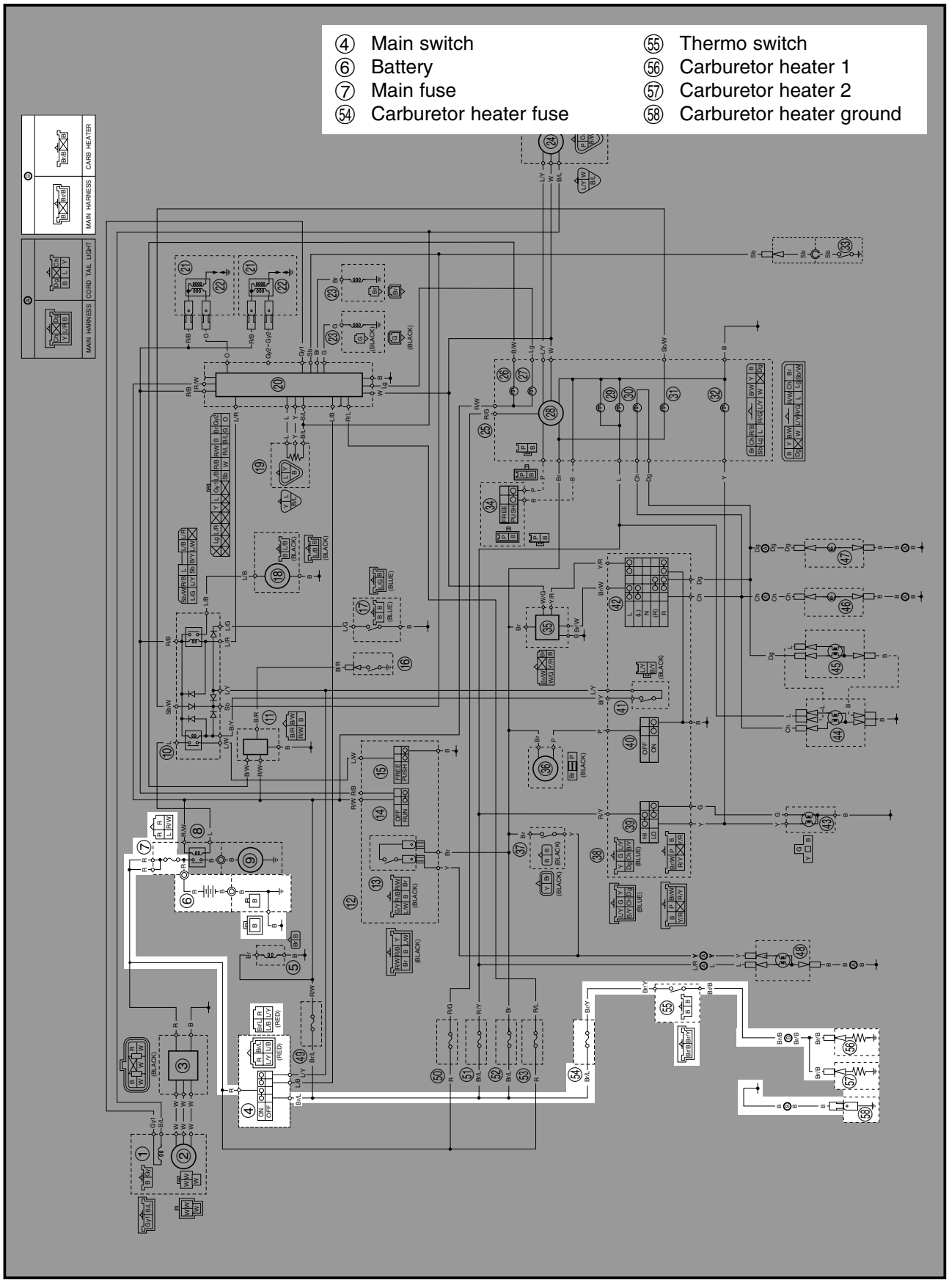

EAS00781

TROUBLESHOOTING

The carburetor heater fails to operate.

Check:
1. main, and carburetor heater
2. battery
3. main switch
4. thermo switch
5. carburetor heater
6. wiring
   (of the entire carburetor heater system)

NOTE:
- Before troubleshooting, remove the following part (-s):
  1. battery cover
  2. rider's seat
  3. fuel tank
  4. steering head side covers
  5. tool box cover
- Troubleshoot with the following special tool (-s).

Pocket tester:
90890-03112, YU-03112-C

EAS00738

1. Main, and carburetor heater fuses

- Check the main, and carburetor heater fuses for continuity.
  Refer to "CHECKING THE FUSES" in 5EL-28197-E0 chapter 3.
- Are the main, and carburetor heater fuses OK?

YES → NO → Replace the fuse(-s).

EAS00739

2. Battery

- Check the condition of the battery.
  Refer to "CHECKING AND CHARGING THE BATTERY" in 5EL-28197-E0 chapter 3.

Open-circuit voltage
12.8V or more at 20 °C (68 °F)

- Is the battery OK?

YES → NO →
- Clean the battery terminals.
- Recharge or replace the battery.

EAS00749

3. Main switch

- Check the main switch for continuity.
  Refer to "CHECKING THE SWITCHES" in 5EL-28197-E0 chapter 7.
- Is the main switch OK?

YES → NO → Replace the main switch.

4. Thermo switch

- Remove the thermo switch from the thermo switch plate.
- Connect the pocket tester to the thermo switch lead.

Tester positive lead → black ①
Tester negative lead → black ②

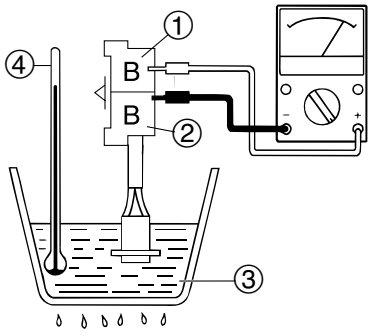

- Immerse the thermo switch in the water ③.
- Check the thermo switch for continuity.
  Note the temperatures while heating the water with the temperature gauge ④.

Test step	Water temperature	Good condition
1	Less than 16 ± 3°C (60.8 ± 5.4°F)	○
2	More than 16 ± 3°C (60.8 ± 5.4°F)	×
3	More than 11 ± 3°C (51.8 ± 5.4°F)	×
4	Less than 11 ± 3°C (51.8 ± 5.4°F)	○

Test 1 & 2 : Heat-up test
Test 3 & 4 : Cool-down test
○ : Continuity **× : No continuity**

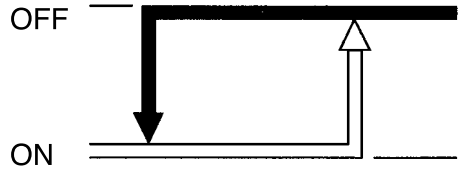

Thermo switch 11 ± 3°C (51.8 ± 5.4°F)

Thermo switch 16 ± 3°C (60.8 ± 5.4°F)

- Is the thermo switch OK?

YES

NO

Replace the thermo switch.

5. Carburetor heater

- Remove the carburetor heater from the carburetor body.
- Connect the pocket tester to the carburetor heater.

Tester positive lead → Heater terminal ①
Tester negative lead → Heater body ②

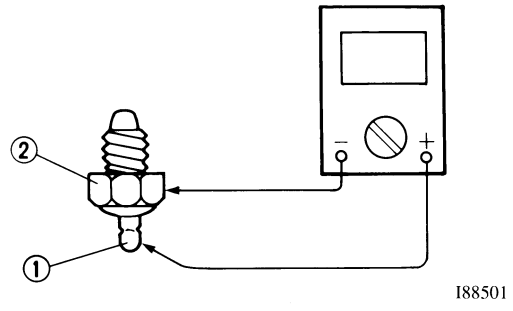

- Measure the heater resistance.

Carburetor heater resistance:
12 V 30 W : 3.2–5.8 Ω
at 20°C (68°F)

- Is the carburetor heater OK?

YES → NO → Replace the carburetor heater.

EAS00766

6. Wiring

- Check the entire carburetor heater system's wiring.
  Refer to "CIRCUIT DIAGRAM".
- Is the carburetor heater system's wiring properly connected and without defects?

NO → Properly connect or repair the carburetor system's wiring.

YES → The carburetor heater system circuit is OK.

SELF-DIAGNOSIS

The XVS11A features self-diagnosis.
When the main switch is turned to “ON”, the following items are monitored and the condition codes are displayed on the engine indicator light (irrespective of whether the engine is running or not).

NOTE:

The XVS11A features a self-diagnosing system.
In the XVS11A, when the main switch is turned on the “Engine indicator light” in the speedometer comes on for 1.4 seconds then goes off. However, if there is a malfunction, it comes on for 1.4 seconds, goes off and then begins flashing. (However, it is on while the engine is running.)

Item	Condition	Fail-safe action	Display condition code	
			When engine is stationary	When engine is running
Throttle position sensor (TPS)	Disconnected or short-circuit	Fixes the throttle position sensor to fully open.	Blinks in Fault code: 15	Light on
	Locked		Blinks in Fault code: 16	Light on
	When the main switch is turned to ON, a stuck is detected.		—	Light on
Speed sensor	Defective speed sensor pulse	—	Blinks in Fault code: 42	Light on
Ignition coil #1	Primary coil lead is short-circuit	Fuel cut solenoid valve #1 on.	Blinks in Fault code: 33	Light on
Ignition coil #2	Primary coil lead is short-circuit	Fuel cut solenoid valve #2 on.	Blinks in Fault code: 34	Light on
Fuel cut solenoid valve #1	Disconnected or short-circuit	—	Blinks in Fault code: 57	Light on
Fuel cut solenoid valve #2	Disconnected or short-circuit	—	Blinks in Fault code: 58	Light on

Display order on the engine indicator light

<Example> 42

① Light on (second) .....1 second
② Light off (seconds) .....1.5 seconds
③ Light on (seconds) .....0.5 seconds
④ Light off (seconds) .....3 seconds

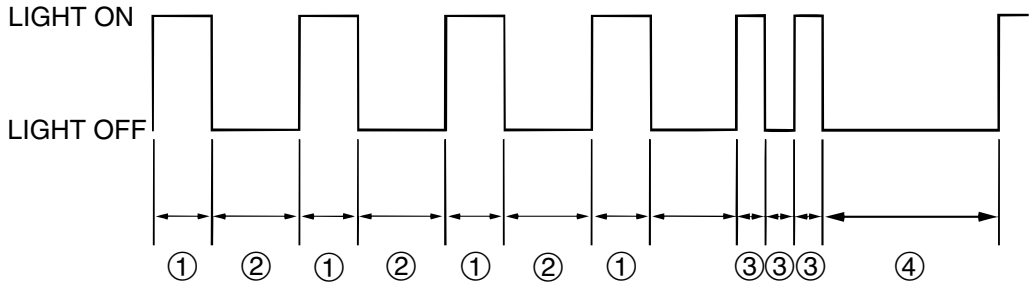

TROUBLESHOOTING

The engine trouble warning light starts to display the self-diagnosis sequence.

Check:
1. throttle position sensor
2. speed sensor
3. ignition coil
4. fuel cut solenoid

NOTE:
- Before troubleshooting, remove the following part(-s):
  1. rider seat
  2. fuel tank
  3. air filter case
  4. left side cover
- Troubleshoot with the following special tool(-s).

Pocket tester:
90890-03112, YU-03112-C

EAS00836

1. Throttle position sensor

CIRCUIT DIAGRAM

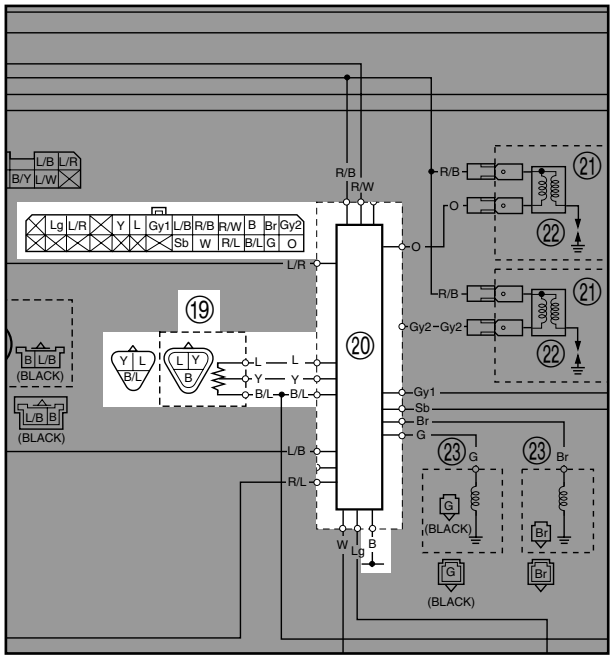

⑲ Throttle position sensor
⑳ Ignitor unit

1. Wireharness

- Check the wireharness for continuity. Refer to “CIRCUIT DIAGRAM”.
- Is the wireharness OK?

YES ⇩ NO ⇩

Repair or replace the wireharness.

EB812401

2. Throttle position sensor

- Check the throttle position sensor for continuity.
  Refer to “CHECKING AND ADJUSTING THE THROTTLE POSITION SENSOR” in 5EL-28197-E0 chapter 6.
- Is the throttle position sensor OK?

YES ⇩ NO ⇩

Replace the ignitor unit.

Replace the throttle position sensor.

2. Speed sensor

CIRCUIT DIAGRAM

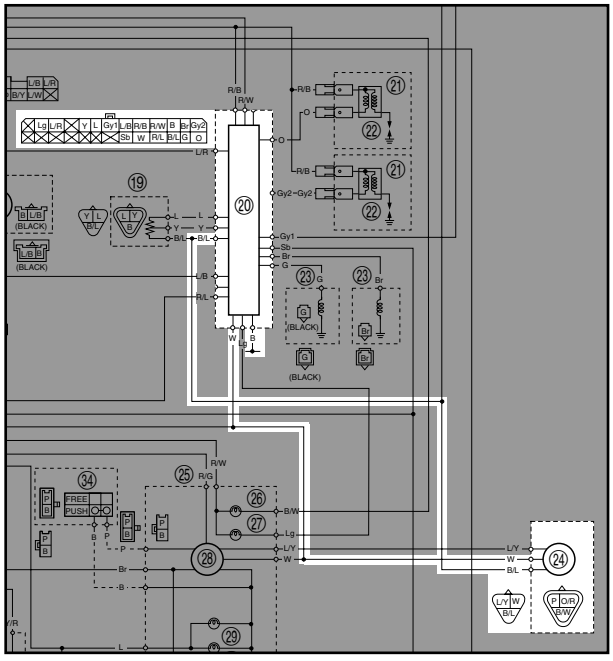

⑳ Ignitor unit
㉔ Speed sensor

1. Wireharness
•Check the wireharness for continuity. Refer to “CIRCUIT DIAGRAM”. •Is the wireharness OK?

YES

NO

Repair or replace the wireharness.

2. Speed sensor
•Place the motorcycle on a suitable stand so that the rear wheel is elevated. •Connect the pocket tester (DC 20 V) to the speed sensor connector.
Tester positive lead → White ① terminal **Tester negative lead → Body earth**

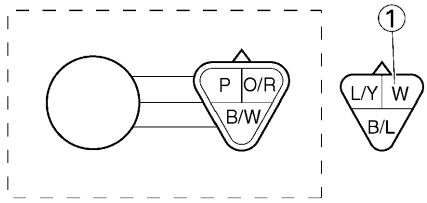

•Set the main switch to “ON”.
•Turn the rear wheel slowly.
•Check the tester voltage (0 V – 5 V – 0 V).
•Is the speed sensor OK?

YES

Replace the ignitor unit.

NO

Replace the speed sensor.

3. Ignition coil

1. Wireharness

- Check the wireharness for continuity. Refer to "IGNITION SYSTEM" in 5EL-28197-E0 chapter 7.
- Is the wireharness OK?

YES ⇩ NO ⇩

Repair or replace the wireharness.

EAS00747

2. Ignition coil resistance

The following procedure applies to all of the ignition coils.

- Disconnect the ignition coil connectors from the ignition coil terminals.
- Connect the pocket tester (Ω × 1) to the ignition coil as shown.

Tester positive probe → red/black
Tester negative probe → orange (gray)

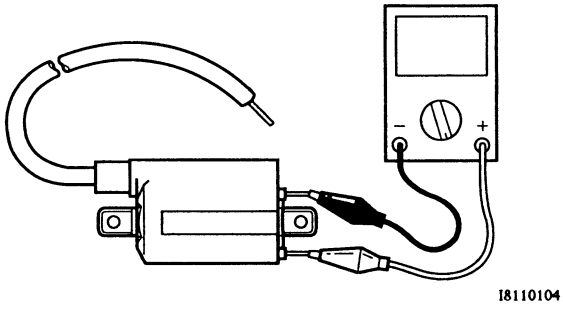

- Measure the primary coil resistance.

Primary coil resistance
3.57 ~ 4.83 Ω at 20°C (68°F)

- Connect the pocket tester (Ω × 1k) to the ignition coil as shown.
- Measure the secondary coil resistance.

Tester positive probe → spark plug lead ①
Tester negative probe → Orange (gray) lead ②

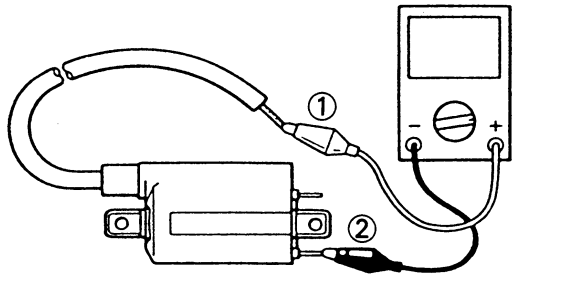

Secondary coil resistance
10.7 ~ 14.5 kΩ at 20°C (68°F)

- Is the ignition coil OK?

YES ⇩ NO ⇩

Replace the ignitor unit.

Replace the ignition coil.

4. Fuel-cut solenoid

CIRCUIT DIAGRAM

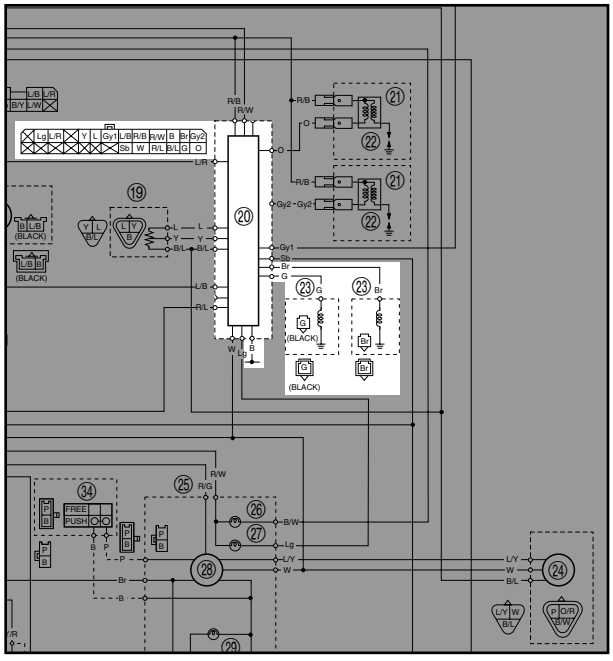

⑳ Igniter unit
㉓ Fuel-cut solenoid 1 (#1 carburetor) (brown)
㉓ Fuel-cut solenoid 2 (#2 carburetor) (green)

1. Wireharness
•Check the wireharness for continuity. Refer to “CIRCUIT DIAGRAM”. •Is the wireharness OK?

YES → Replace the fuel-cut solenoid 1 or 2.

NO → Repair or replace the wireharness.

XVS11AWV/XVS11ATV/XVS1100ASC/XVS1100ATSC WIRING DIAGRAM (for US and CAL)

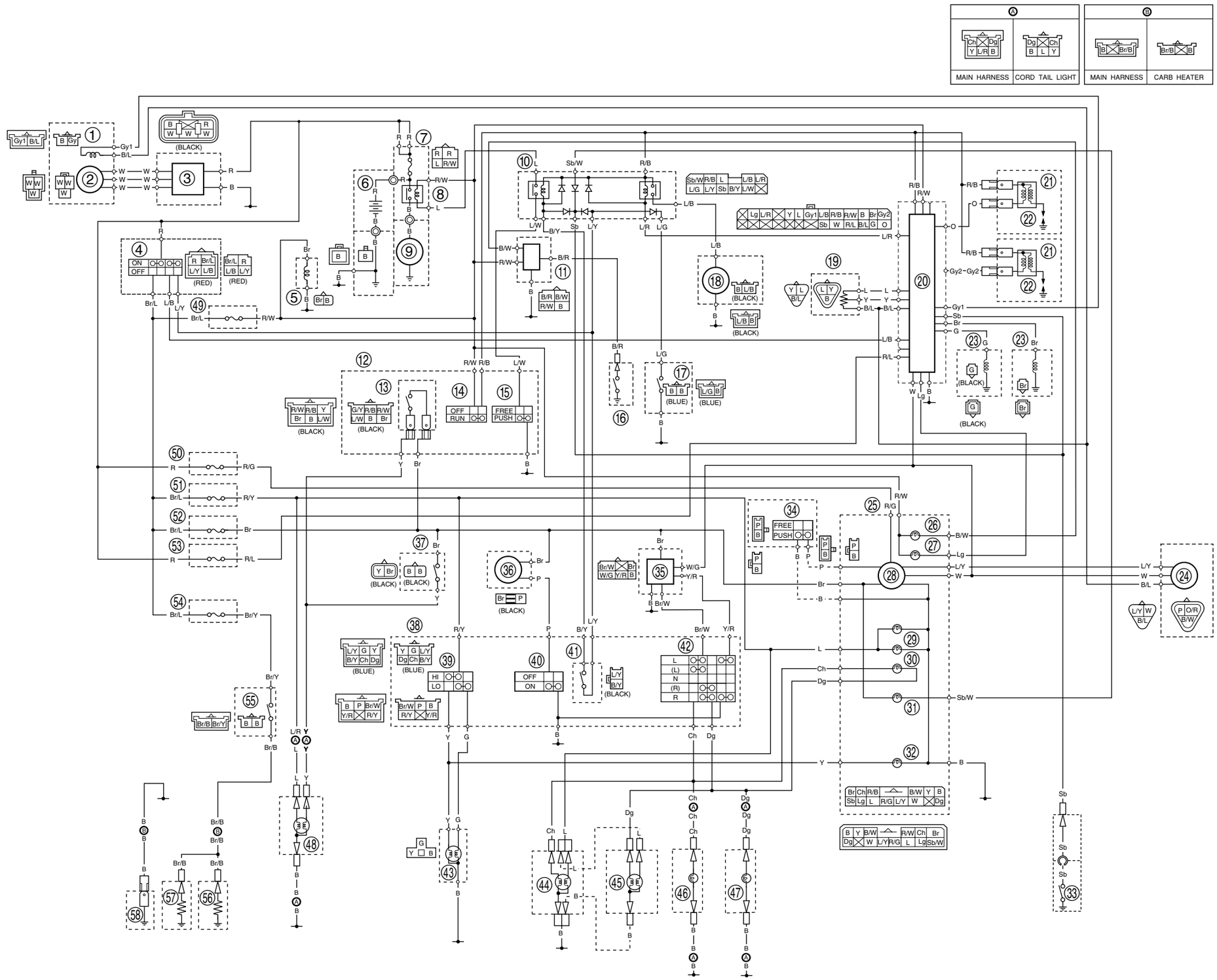

① Pickup coil
② A.C. magneto (stator coil)
③ Rectifire/ regulator
④ Main switch
⑤ Solenoid (for CAL.)
⑥ Battery
⑦ Main fuse
⑧ Starter relay
⑨ Starter motor
⑩ Starting circuit cut-off relay
⑪ Oil lamp relay
⑫ Right handlebar switch
⑬ Front brake switch
⑭ Engine stop switch
⑮ Start switch
⑯ Oil level gauge
⑰ Sidestand switch
⑱ Fuel pump
⑲ Throttle position sensor
⑳ Ignitor unit
㉑ Ignition coil
㉒ Spark plug
㉓ Fuel cut solenoid valve (#1: brown, #2: green)
㉔ Speed sensor
㉕ Meter assembly
㉖ Oil level caution light
㉗ Engine warning light
㉘ Speedmeter
㉙ Meter light
㉚ Turn signal indicator light
㉛ Neutral indicator light
㉜ High beam indicator light
㉝ Neutral switch
㉞ Trip switch
㉟ Flasher relay
㊱ Horn
㊲ Rear brake switch
㊳ Left handlebar switch
㊴ Dimmer switch
㊵ Horn switch
㊶ Clutch switch
㊷ Turn signal switch
㊸ Headlight
㊹ Rear turn signal light (right)
㊺ Rear turn signal light (left)
㊻ Front turn signal/ position light (right)
㊼ Front turn signal/ position light (left)
㊽ Tail / brake light
㊾ Ignition fuse
㊿ Backup fuse
(51) Headlight fuse
(52) Signal fuse
(53) Igniter fuse
(54) Carburetor heater fuse
(55) Thermo switch
(56) Carburetor heater 1
(57) Carburetor heater 2
(58) Carburetor heater ground

COLOR CORD

B.....Black
Br .....Brown
Ch .....Chocolate
Dg .....Dark green
G .....Green
Gy .....Gray
L.....Blue
Lg.....Light green
Or.....Orange
P.....Pink
R .....Red
Sb.....Sky blue
W.....White
Y.....Yellow
B/ L .....Black/ Blue
B/ W .....Black/ White
B/ Y .....Black/ Yellow
Br/ B .....Brown/ Black
Br/ L .....Brown/ Blue
Br/ W .....Brown/ White
Br/ Y .....Brown/ Yellow
L/ B .....Blue/ Black
L/ R .....Blue/ Red
L/ W .....Blue/ White
L/ Y .....Blue/ Yellow
R/ B .....Red/ Black
R/ G .....Red/ Green
R/ W .....Red/ White
R/ Y..... Red/ Yellow
Y/ R .....Yellow/ Red